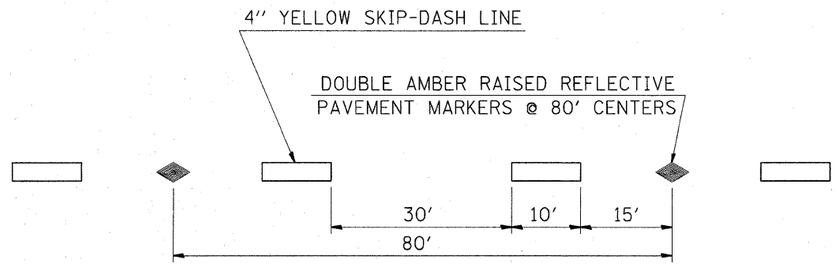

TYPICAL APPLICATION
FOR YELLOW SKIP-DASH LINES
WITH RAISED REFLECTIVE PAVEMENT MARKERS

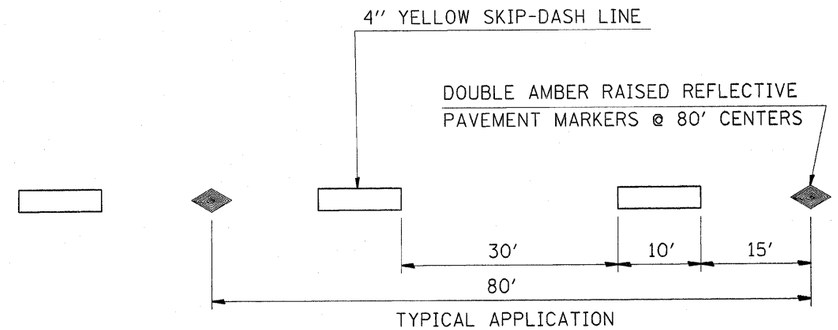

TYPICAL APPLICATION
FOR YELLOW SKIP-DASH LINES
WITH RAISED REFLECTIVE PAVEMENT MARKERS

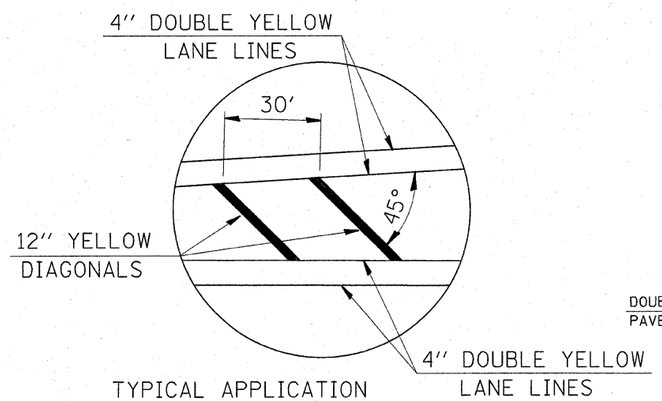

TYPICAL APPLICATION
FOR MEDIAN STRIPING

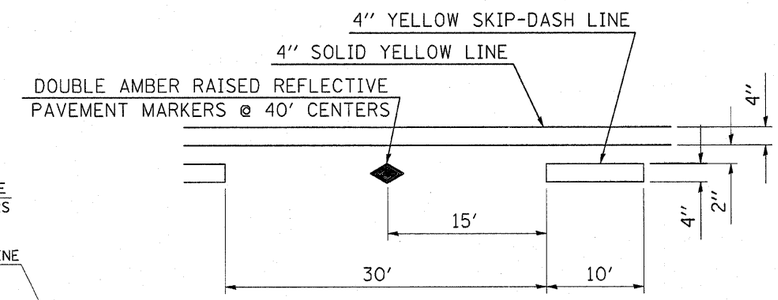

TYPICAL APPLICATION FOR
NO PASSING LANES
WITH RAISED REFLECTIVE PAVEMENT MARKERS
(ONLY ON SHARP CURVES)

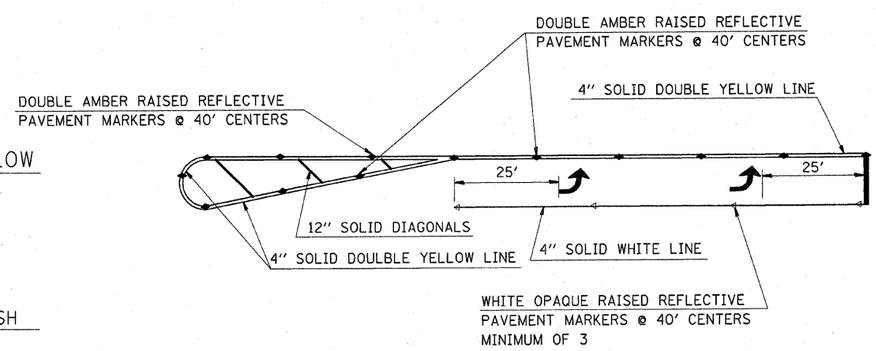

TYPICAL APPLICATION
FOR LEFT TURN LANE
WITH RAISED REFLECTIVE PAVEMENT MARKERS

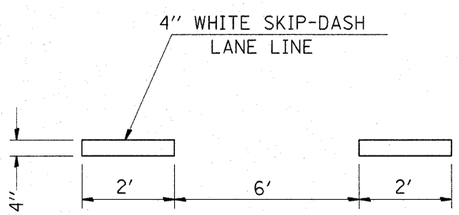

TYPICAL APPLICATION FOR
WHITE SKIP-DASH LANE LINES

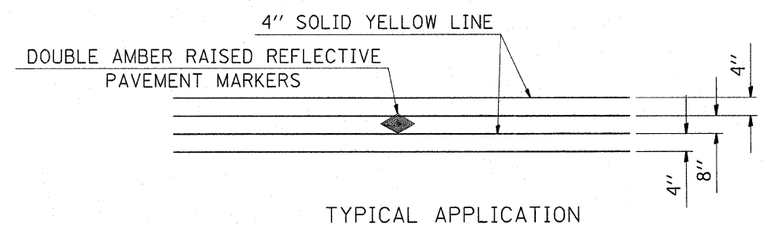

TYPICAL APPLICATION
FOR DOUBLE YELLOW LANE LINES
WITH RAISED REFLECTIVE PAVEMENT MARKERS

FILE NAME = $FILEL$	USER NAME = $USER$	DESIGNED - ___	REVISED - ___	STATE OF ILLINOIS DEPARTMENT OF TRANSPORTATION	PAVEMENT MARKINGS DETAIL	F.A.P. RTE.	SECTION	COUNTY	TOTAL SHEETS	SHEET NO.
		DRAWN - ___	REVISED - ___			805	(101,102,61-1-1)RS	MARION	81	60
	PLOT SCALE = $SCALE$	CHECKED - ___	REVISED - ___					CONTRACT NO. 76B33		
	PLOT DATE = $DATE$	DATE - _____	REVISED - ___		SCALE: _____ SHEET NO. __ OF ___ SHEETS STA. _____ TO STA. _____	FED. ROAD DIST. NO. _	ILLINOIS	FED. AID PROJECT		