FAIL RTE.	SECTION	COUNTY	TOTAL SHEETS	SHEET NO.
1380	00-00084-00-PV	DUPAGE	93	64
STA.		TO STA.		
		ILLINOIS	SURFACE TRANSPORTATION FUNDING	

CONTRACT NUMBER 83993

STD. 607A

NOT TO SCALE

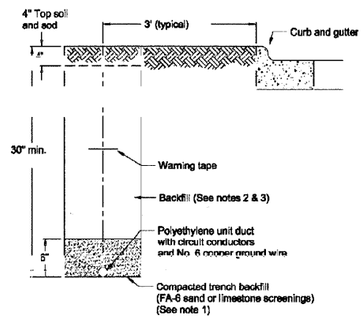

Notes:

1. Unit duct installed in trenches shall be covered with a minimum of 6" of compacted FA-6, or limestone screenings.
2. In grassy areas, the backfill may be compacted earth.
3. Trenches within 2' of proposed or existing sidewalks, driveways, or streets shall be backfilled with compacted FA-6 sand or limestone screenings.
4. Where more than (1) unit duct runs adjacent to each other, they shall be placed in a common trench so as not to cross each other.
5. 6" wide reinforced metallic warning tape, red with black lettering to read "Caution-Electrical line buried below". Warning tape to be placed 1' minimum to 2' maximum below finished grade.
6. All grassy areas disturbed during construction shall be restored with 4" of top soil and sod.

UNIT DUCT TRENCH

REVISIONS	VILLAGE OF ADDISON
5/98	APPROVED: 2/2/94
8/03	R. ESPEDIDO, P.E., VILLAGE ENGINEER

STD. 607B

NOT TO SCALE

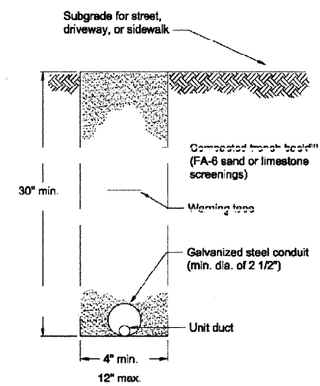

Notes:

1. Conduit shall be hot dip galvanized steel, [illegible] 2 1/2" [illegible].
2. Conduit shall extend a minimum of 1' beyond the street, driveway, or sidewalk.
3. Conduit shall have both ends capped until used.
4. When placed into service, conduit shall be provided with an insulated fiber bushing, and sealed with a workable soft plastic sealing compound at each end.
5. 6" wide reinforced metallic warning tape, red with black lettering to read "Caution - Electrical line buried below". Warning tape to be placed 1' minimum to 2' maximum below finished grade.
6. All grassy areas disturbed during construction shall be restored with 4" of topsoil and sod.

CONDUIT TRENCH

REVISIONS	VILLAGE OF ADDISON
8/03	APPROVED: 2/2/94
	R. ESPEDIDO, P.E., VILLAGE ENGINEER

STD. 608A

NOT TO SCALE

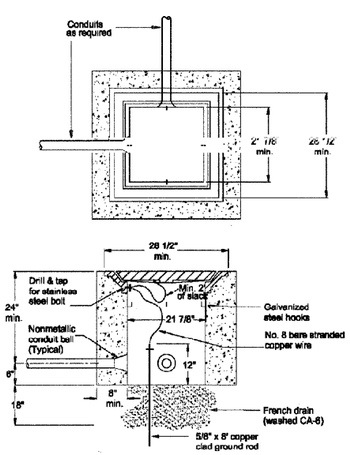

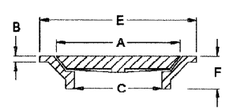

NEENAH R-6660-JP

OR APPROVED EQUAL

DIMENSIONS IN INCHES

A: 23 1/2 X 23 1/2

B: 3/4

C: 21 7/8 X 21 7/8

E: 28 1/2 X 28 1/2

F: 4

NOTE:

1. Cover to be imprinted with "Street Lighting". Frames shall be furnished with Type "G" lifting handles.
2. Frame shall be grounded per N.E.C. Drill and tap the frame and lid. Connect No. 8 bare stranded copper jumper wire with stainless steel hex head bolts and lock washers.

LIGHT DUTY HANDHOLE

(Concrete)

REVISIONS	VILLAGE OF ADDISON
5/98	APPROVED: 2/2/94
8/03	R. ESPEDIDO, P.E., VILLAGE ENGINEER

STD. 609.1B

NOT TO SCALE

NOTES:

1. Service cable and conduit sizes shall be as required by Com.Ed. with the minimum conduit size of 2" and a minimum service cable size of No. 2 copper conductors.

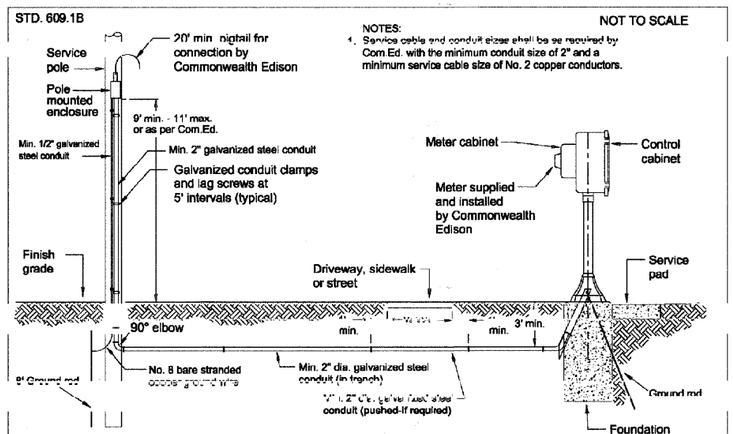

SERVICE INSTALLATION

(WITH POLE MOUNTED REMOTE DISCONNECT)

REVISIONS	VILLAGE OF ADDISON
5/98	APPROVED: 2/2/94
8/03	R. ESPEDIDO, P.E., VILLAGE ENGINEER

REVISIONS	
NAME	DATE

VILLAGE OF ADDISON

ELECTRICAL DETAIL SHEET

FULLERTON AVENUE

SHEET 2 OF 3

DATE: 11/26/2007
DESIGNED BY: FEI
TECHNICIAN: FEI
CHECKED BY: DEM