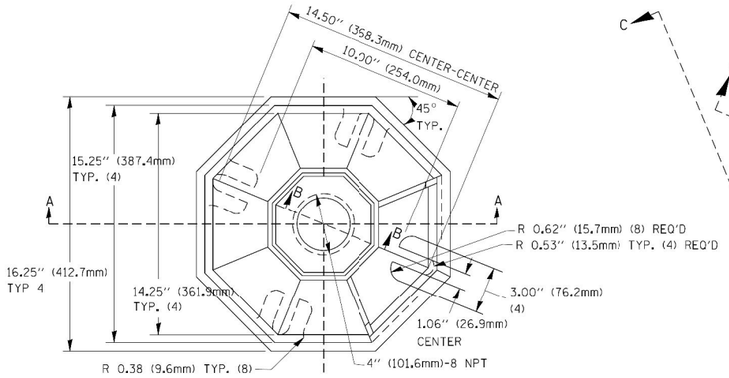

TOP VIEW

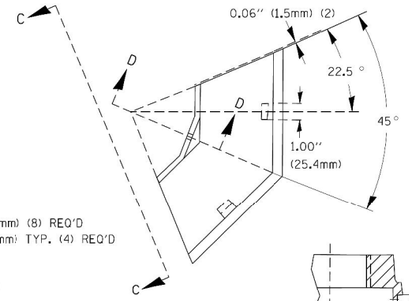

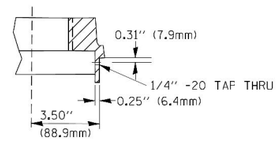

SECTION B-B

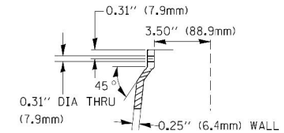

SECTION D-D

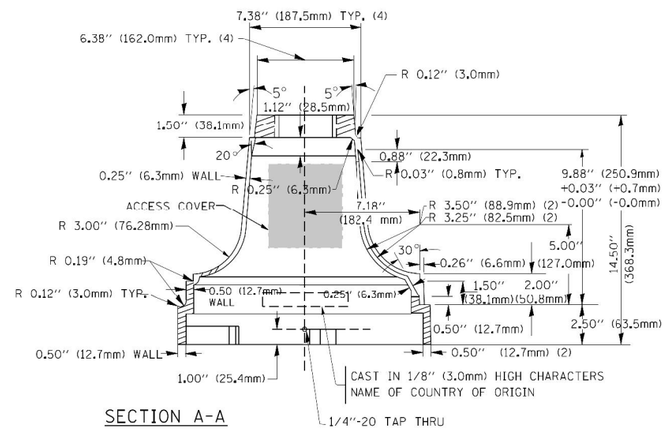

SECTION A-A

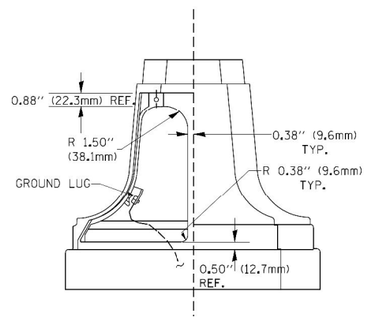

VIEW C-C

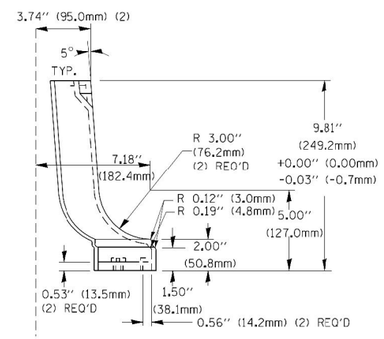

TRAFFIC SIGNAL POST - MOUNTING BASE - TYPE A

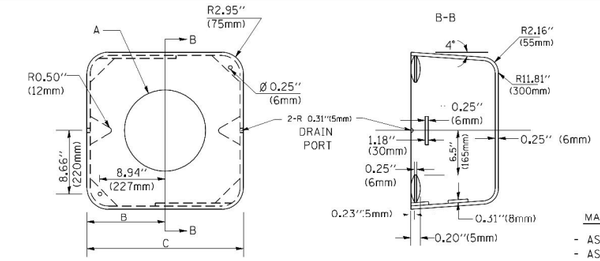

MATERIAL:
- ASTM A36 STEEL
- ASTM A-123 HOT DIPPED GALVANIZED

A	B	C	HEIGHT	WEIGHT
VARIES	9.5"(241mm)	19"(483mm)	7" (178mm) - 12" (300mm)	53 lbs (24kg)
VARIES	10.75"(273mm)	21.5"(546mm)	7" (178mm) - 12" (300mm)	68 lbs (31 kg)
VARIES	13.0"(330mm)	26"(660mm)	7" (178mm) - 12" (300mm)	81 lbs (37 kg)
VARIES	18.5"(470mm)	37"(940mm)	7" (178mm) - 12" (300mm)	126 lbs (57 kg)

SHROUD

NOTES:

1. DIMENSION "A" IS EQUAL TO THE DIAMETER OF THE MAST ARM POLE AT THE TOP OF THE SHROUD. THE SHROUD SHALL BE TIGHT TO THE MAST ARM POLE.
2. THE SUPPLIER SHALL VERIFIED THE ABOVE DIMENSIONS BASED ON MAST ARM REQUIREMENTS.
3. THE HEIGHT OF THE SHROUD SHALL COVER THE ANCHOR BOLTS, NUTS AND MAST ARM POLE BASE.

NOTE:
SUPPORT EXISTING CABINET AND CONTROL EQUIPMENT ABOVE FOUNDATION TO KEEP TRAFFIC SIGNAL FUNCTIONING WHILE FOUNDATION MODIFICATION WORK IS PROCEEDING.

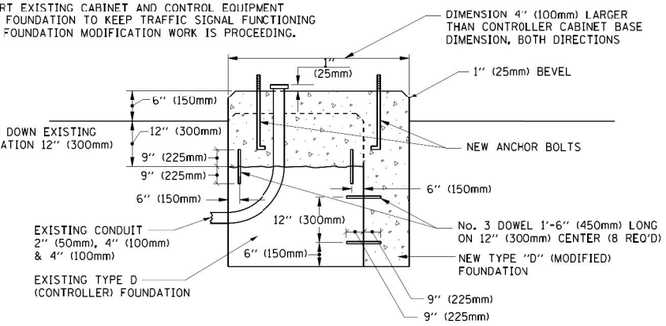

MODIFY EXISTING TYPE "D" FOUNDATION

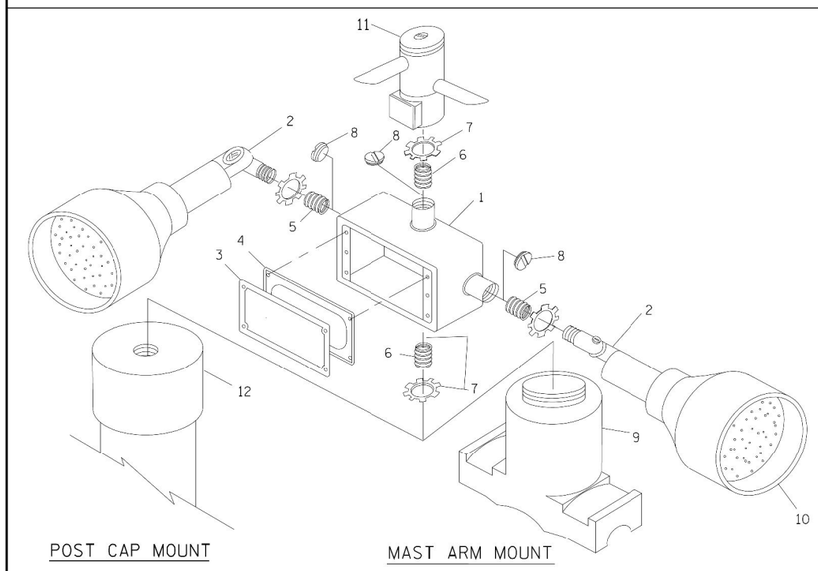

POST CAP MOUNT

MAST ARM MOUNT

EMERGENCY VEHICLE DETECTOR WITH CONFIRMATION BEACON MOUNTING DETAIL

ITEM NO.	IDENTIFICATION
1	OUTLET BOX- GALV. 21 CU.IN. (0.000344 CU-M)
2	LAMP HOLDER AND COVER
3	OUTLET BOX COVER
4	RUBBER COVER GASKET
5	REDUCING BUSHING
6	3/4"(19 mm) CLOSE NIPPLE
7	3/4"(19 mm) LOCKNUT
8	3/4"(19 mm) HOLE PLUG
9	SADDLE BRACKET - GALV.
10	6 WATT PAR 38 LED FLOOD LAMP
11	DETECTOR UNIT
12	POST CAP [18 FT. (5.4 m) POST MIN.]

NOTES:

1. ALL ELECTRICAL ITEMS, EXCEPT ITEMS #2 AND #11 SHALL BE ALUMINUM OR GALVANIZED
2. ITEM #1- OZ/GEDNEY FSX-1-50 OR EQUIVALENT
   ITEM #2- MULBERRY CON-O-SHADE LAMP SHIELD OR EQUIVALENT
   ITEM #9- "BAND-IT" SADDLE BRACKET OR EQUIVALENT
3. WHEN POST MOUNTING IS SPECIFIED, ITEM #9 SHALL NOT BE REQUIRED. THE DETECTION UNIT SHALL BE MOUNTED DIRECTLY ON TOP OF THE CAP BY DRILLING AND TAPPING A 3/4"(19 mm) HOLE WITH PIPE THREADS. THE POST CAP SHALL EITHER BE SCREWED TO THE TOP OF THE POST OR A MINIMUM OF 3 TIGHTENING SCREWS SHALL BE REQUIRED ON EACH CAP.

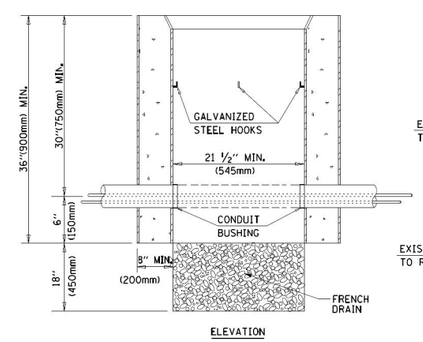

ELEVATION

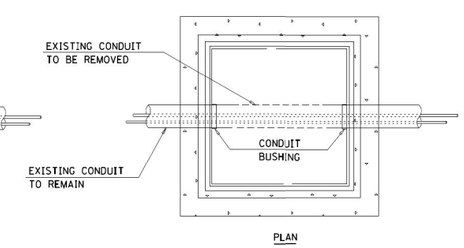

PLAN

NOTES:

1. HANDHOLE CONSTRUCTED PER STATE STANDARD 814001.
2. REMOVAL OF THE EXISTING CONDUIT FROM THE HANDHOLE AND THE INSTALLATION OF THE CONDUIT BUSHINGS SHALL BE INCIDENTAL TO THE HANDHOLE.

HANDHOLE TO INTERCEPT EXISTING CONDUIT

GHA #4085,887

FILE NAME = 60V80-014-intersec.dgn	USER NAME = zwallsten	DESIGNED - DAD	REVISED -
		DRAWN - BCK	REVISED -
	PLOT SCALE = 1:20	CHECKED - DAD	REVISED -
Default	PLOT DATE = 12/20/2012	DATE - 10-28-09	REVISED -

STATE OF ILLINOIS
DEPARTMENT OF TRANSPORTATION

DISTRICT ONE
STANDARD TRAFFIC SIGNAL DESIGN DETAILS

SCALE: NONE | SHEET 4 OF 6 SHEETS | STA. TO STA.

F.A. RTE.	SECTION	COUNTY	TOTAL SHEETS	SHEET NO.
VARIES	2012-070 1	WILL	103	14
	TS-05	CONTRACT NO. 60V80		
		ILLINOIS FED. AID PROJECT		