041

03-08-2019 LETTING ITEM 041

FAU RTE.	SECTION	COUNTY	TOTAL SHEETS	SHEET NO.
9257	(28-1, 122-1, 122-2)SW-1	ST. CLAIR	25	1
	ILLINOIS	CONTRACT NO. 76J81		

STATE OF ILLINOIS
DEPARTMENT OF TRANSPORTATION
DIVISION OF HIGHWAYS

PROPOSED HIGHWAY PLANS

FAU ROUTE 9257 (NORTHBELT WEST)
SECTION (28-1,122-1,122-2)SW-1
PROJECT STP-MPJV(320)
ADA IMPROVEMENTS
ST. CLAIR COUNTY

C-98-151-18

INDEX OF SHEETS

1. COVER SHEET
2. GENERAL NOTES, COMMITMENTS, ADT, AND HIGHWAY STANDARDS
3.-4. SUMMARY OF QUANTITIES
5. WORK AREA LOCATIONS
6. SCHEDULES
7. PROPOSED NBW @ FRANK SCOTT PARKWAY
8. PROPOSED NBW @ 47TH STREET
9.-11. PROPOSED NBW @ MAIN STREET
12. PROPOSED NBW @ N. 42ND STREET
13. PROPOSED NBW @ ROYAL HEIGHTS ROAD
14. PROPOSED NBW @ CANTEBURY DRIVE
15. PROPOSED NBW @ 17TH STREET
16. ADA PEDESTRIAN PUSH-BUTTON REPLACEMENT NOTES & SCHEDULES
17.-24. PROPOSED ADA PUSH BUTTON REPLACEMENT PLANS
25. CURB & GUTTER DOWEL BAR DETAIL

D-98-067-16

LOCATION OF SECTION INDICATED THUS:-

DESIGN DESIGNATION

N/A

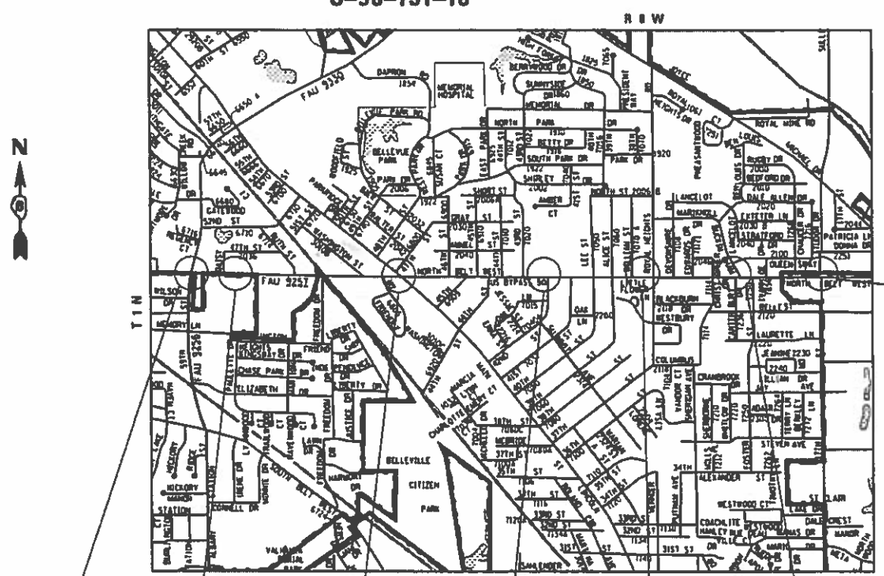

BEGIN PROJECT
17TH STREET
LAT.: 38.541372
LONG.: -90.001738
STA. 243+88.5235

END PROJECT
FRANK SCOTT PKWY
LAT.: 38.541595
LONG.: -90.037055
STA. 143+90.0340

47TH ST.
SCHNUCKS ENT.
LAT.: 38.541793
LONG.: -90.034889
STA. 149+17.3818

W. MAIN ST.
LAT.: 38.541782
LONG.: -90.025399
STA. 177+65.1230

N. 42ND ST.
SHOP-N-SAVE ENT.
LAT.: 38.541649
LONG.: -90.016789
STA. 200+91.0000

ROYAL HEIGHTS RD
N. 37TH ST.
LAT.: 38.541648
LONG.: -90.011024
STA. 217+31.1721

CANTEBURY DR.
BUCKINGHAM RD.
LAT.: 38.54162
LONG.: -90.006509
STA. 230+35.5469

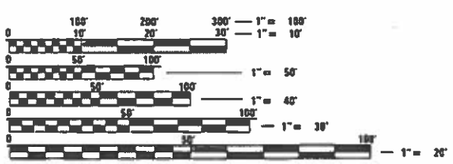

FULL SIZE PLANS HAVE BEEN PREPARED USING STANDARD ENGINEERING SCALES. REDUCED SIZED PLANS WILL NOT CONFORM TO STANDARD SCALES. IN MAKING MEASUREMENTS ON REDUCED PLANS, THE ABOVE SCALES MAY BE USED.

J.U.L.I.E.
JOINT UTILITY LOCATION INFORMATION FOR EXCAVATION
1-800-892-0123
OR 811

PROJECT ENGINEER HERVE GELIN (618) 346-3179
SQUAD LEADER CECIL DOWNING (618) 344-3186

CONTRACT NO. 76J81

STATE OF ILLINOIS
DEPARTMENT OF TRANSPORTATION

SUBMITTED Oct 18, 20 18
REGIONAL ENGINEER
Feb 1 20 19
ENGINEER OF DESIGN AND ENVIRONMENT
Feb 1 20 19
DIRECTOR OF HIGHWAYS PROJECT IMPLEMENTATION

PRINTED BY THE AUTHORITY OF THE STATE OF ILLINOIS

REV. - MS

GENERAL NOTES

1. ILLINOIS STATE LAW REQUIRES A 48-HOUR NOTICE BE GIVEN TO ALL UTILITIES BEFORE DIGGING. FIELD MARKING OF FACILITIES MAY BE OBTAINED BY CONTACTING J.U.L.I.E. OR FOR NON-MEMBERS, THE UTILITY COMPANY DIRECTLY. AGENCIES KNOWN TO HAVE FACILITIES WITHIN THE PROJECT AREA ARE AS FOLLOWS:

- CITY OF BELLEVILLE (LIGHTING)
- CITY OF BELLEVILLE (SANITARY SEWER)
- AMEREN ILLINOIS (GAS & ELECTRIC)
- AT&T ILLINOIS (COMMUNICATIONS)
- CHARTER COMMUNICATIONS, INC. (CTV)
- ILLINOIS AMERICAN WATER COMPANY (WATER)

MEMBERS OF J.U.L.I.E. CALL TOLL FREE (800) 892-0123 OR 811 AND ARE INDICATED BY •. NON-J.U.L.I.E. MEMBERS MUST BE NOTIFIED INDIVIDUALLY.

2. THE CONTRACTOR SHALL EXERCISE CARE IN EXCAVATING AROUND EXISTING UTILITIES TO REMAIN IN PLACE, SUCH AS WATER AND SEWER MAINS, AND SHALL BE RESPONSIBLE FOR REPAIR OF THESE AND MAINTENANCE OF SERVICE, IF DAMAGED BY THE CONTRACTOR'S ACTIVITIES, AS DEEMED SUCH BY THE ENGINEER.

3. THE CONTRACTOR SHALL VERIFY DIMENSIONS AND CONDITIONS IN THE FIELD PRIOR TO CONSTRUCTION AND ORDERING OF MATERIALS.

4. THE CONTRACTOR SHALL EXERCISE CARE IN PERFORMING REMOVALS SO AS NOT TO DISRUPT ADJOINING FEATURES THAT ARE TO REMAIN IN PLACE. ANY DAMAGE CAUSED TO ADJOINING FEATURES AS A RESULT OF THE CONTRACTOR'S OPERATIONS SHALL BE REPAIRED AT THE CONTRACTOR'S EXPENSE TO THE SATISFACTION OF THE ENGINEER.

5. ALL SAW CUTTING REQUIRED FOR REMOVALS SHALL BE INCLUDED IN THE CONTRACT UNIT PRICE PER UNIT OF REMOVAL QUANTITIES.

6. ALL AREAS DISTURBED FOR ANY REASON SHALL BE PERMANENTELY SEEDED AS DIRECTED BY THE ENGINEER AND INCLUDED IN THE COST OF THE CONTRACT.

7. THE CONTRACTOR SHALL BE RESPONSIBLE FOR ESTABLISHING POSITIVE DRAINAGE IN THE DISTURBED AREAS, TO THE SATISFACTION OF THE ENGINEER.

8. ALL LOOSE MATERIAL DEPOSITED IN THE FLOWLINE OF DRAINAGE STRUCTURES WHICH OBSTRUCT THE NATURAL FLOW OF WATER SHALL BE REMOVED AT THE CLOSE OF EACH WORKING DAY. PRIOR TO FINAL ACCEPTANCE OF THE IMPROVEMENT, ALL DRAINAGE STRUCTURES SHALL BE FREE OF DIRT AND DEBRIS. THIS WORK WILL NOT BE PAID FOR SEPARATELY, BUT SHALL BE INCLUDED IN THE BID PRICES OF THE CONTRACT.

9. NO OVERNIGHT LANE CLOSURES WILL BE PERMITTED.

10. SIDEROADS AND ENTRANCES SHALL BE OPEN TO TRAFFIC AT ALL TIMES.

11. ALL CONSTRUCTION SIGNS SHALL BE 48" X 48" FLUORESCENT ORANGE.

12. ALL TRAFFIC CONTROL DEVICES AS HEREIN SPECIFIED AND ANY ADDITIONAL TRAFFIC CONTROL DEVICES AS DEEMED NECESSARY BY THE RESIDENT ENGINEER SHALL BE INCLUDED IN THE CONTRACT TRAFFIC CONTROL AND PROTECTION PAY ITEMS.

13. THE DEPARTMENT STRONGLY ENCOURAGES THE PRIME CONTRACTOR AND THEIR APPROVED SUB-CONTRACTORS TO HIRE MINORITY, WOMEN AND DISADVANTAGED INDIVIDUALS FROM ITS FEDERALLY FUNDED HIGHWAY CONSTRUCTION CAREERS TRAINING PROGRAM (HCCTP) TO HELP MEET WORKFORCE AND TRAINEE GOALS. THIS PROGRAM IS TRAINING MINORITIES, WOMEN AND DISADVANTAGED INDIVIDUALS IN HIGHWAY CONSTRUCTION-RELATED SKILLS, E.G., MATH FOR THE TRADES, JOB READINESS, TECHNICAL SKILLS COURSEWORK (CARPENTRY, CONCRETE FLATWORK, BLUEPRINT READING, SITE PLANS, SITE WORK, TOOLS USE, ETC.) AND OSHA 10 HOUR CERTIFICATION, TO PREPARE THEM FOR A CAREER IN THE HIGHWAY CONSTRUCTION TRADES. GRADUATES ARE WELL-TRAINED AND READY TO BECOME PRODUCTIVE ENTRY-LEVEL CONSTRUCTION WORKERS. CONTACT THE DISTRICT 8 EEO OFFICE AT 618-346-3360 AND/OR THE HCCTP COORDINATOR AT 618-874-6528 TO LEARN MORE ABOUT THE PROGRAM AND FOR ASSISTANCE IN MEETING WORKFORCE AND TRAINEE GOALS.

		TRAFFIC DATA			
LOCATION	DESCRIPTION	ACTUAL (YEAR)	ESTIMATED (2016)	SU (%)	MU (%)
1	17TH STREET	25 (2016)	25	4.0	0.0
2	CANTEBURY DRIVE	100 (2016)	100	10.0	5.0
3	ROYAL HEIGHTS RD.	25 (2016)	25	4.0	0.0
4	N. 42ND STREET	25 (2016)	25	4.0	0.0
5	W. MAIN STREET	25 (2016)	25	4.0	0.0
6	47TH STREET	25 (2016)	25	4.0	0.0
7	FRANK SCOTT PKWY	16 (2016)	16	2.0	1.1

HIGHWAY STANDARDS

000001-07	STANDARD SYMBOLS, ABBREVIATIONS AND PATTERNS
001001-02	AREAS OF REINFORCEMENT BARS
001006	DECIMAL OF AN INCH AND OF A FOOT
424001-11	PERPENDICULAR CURB RAMPS FOR SIDEWALKS
424006-04	DIAGONAL CURB RAMPS FOR SIDEWALKS
424016-05	MID-BLOCK CURB RAMPS FOR SIDEWALKS
424021-05	DEPRESSED CORNER FOR SIDEWALKS
424031-02	MEDIAN PEDESTRIAN CROSSINGS
701101-05	OFF-RD OPERATIONS, MULTILANE, 15' (4.5 m) TO 24" (600 mm) FROM PAVEMENT EDGE
701701-10	URBAN LANE CLOSURE, MULTILANE INTERSECTION
701801-06	SIDEWALK, CORNER OR CROSSWALK CLOSURE
701901-08	TRAFFIC CONTROL DEVICES
814001-03	HANDHOLES, POLYMER CONCRETE, SINGLE
814006-02	HANDHOLES, CONCRETE AND POLYMER CONCRETE, DOUBLE
873001-02	TRAFFIC SIGNAL GROUNDING AND BONDING
876001-04	PEDESTRIAN PUSH BUTTON POST
878001-10	CONCRETE FOUNDATION DETAILS
886001-01	DETECTOR LOOP INSTALLATIONS
886006-01	TYPICAL LAYOUTS FOR DETECTION LOOPS

COMMITMENTS

NONE

REV. - MS

CODE NO.	ITEM	UNIT	TOTAL QUANTITY	CONSTR. CODE SAFETY 0021 URBAN
42400100	PORTLAND CEMENT CONCRETE SIDEWALK 4 INCH	SQ FT	4039	4039
42400800	DETECTABLE WARNINGS	SQ FT	442	442
44000500	COMBINATION CURB AND GUTTER REMOVAL	FOOT	611	611
44000600	SIDEWALK REMOVAL	SQ FT	3967	3967
56109210	WATER VALVES TO BE ADJUSTED	EACH	1	1
60255500	MANHOLES TO BE ADJUSTED	EACH	1	1
60260100	INLETS TO BE ADJUSTED	EACH	1	1
60603500	COMBINATION CONCRETE CURB AND GUTTER, TYPE B-6.06	FOOT	36	36
60605000	COMBINATION CONCRETE CURB AND GUTTER, TYPE B-6.24	FOOT	620	620
60618300	CONCRETE MEDIAN SURFACE, 4 INCH	SQ FT	308	308
67100100	MOBILIZATION	L SUM	1	1
70102635	TRAFFIC CONTROL AND PROTECTION, STANDARD 701701	L SUM	1	1
70102640	TRAFFIC CONTROL AND PROTECTION, STANDARD 701801	L SUM	1	1
70103815	TRAFFIC CONTROL SURVEILLANCE	CAL DAY	15	15

	CODE NO.	ITEM	UNIT	TOTAL QUANTITY	CONSTR. CODE SAFETY 0021 URBAN
	70300220	TEMPORARY PAVEMENT MARKING - LINE 4"	FOOT	291	291
	70300240	TEMPORARY PAVEMENT MARKING - LINE 6"	FOOT	158	158
	70300260	TEMPORARY PAVEMENT MARKING - LINE 12"	FOOT	4430	4430
*	78000200	THERMOPLASTIC PAVEMENT MARKING - LINE 4"	FOOT	291	291
*	78000400	THERMOPLASTIC PAVEMENT MARKING - LINE 6"	FOOT	158	158
*	78000600	THERMOPLASTIC PAVEMENT MARKING - LINE 12"	FOOT	4430	4430
*	80300100	LOCATING UNDERGROUND CABLE	FOOT	77	77
*	81028340	UNDERGROUND CONDUIT, PVC, 1 1/2" DIA.	FOOT	57	57
*	81400700	HANDHOLE, PORTLAND CEMENT CONCRETE	EACH	13	13
*	81400710	HEAVY-DUTY HANDHOLE, PORTLAND CEMENT CONCRETE	EACH	1	1
*	81400720	DOUBLE HANDHOLE, PORTLAND CEMENT CONCRETE	EACH	2	2
*	87301215	ELECTRIC CABLE IN CONDUIT, SIGNAL NO. 14 2C	FOOT	2513	2513
*	87601100	PEDESTRIAN PUSH-BUTTON POST, GALVANIZED STEEL, TYPE I	EACH	7	7
*	87900200	DRILL EXISTING HANDHOLE	EACH	7	7

* SPECIALTY ITEM

REV. - MS

	CODE NO.	ITEM	UNIT	TOTAL QUANTITY	CONSTR. CODE SAFETY 0021 URBAN
*	88600600	DETECTOR LOOP REPLACEMENT	FOOT	1084	1084
*	88800100	PEDESTRIAN PUSH-BUTTON	EACH	38	38
*	89500200	RELOCATE EXISTING PEDESTRIAN SIGNAL HEAD	EACH	2	2
*	89500400	RELOCATE EXISTING PEDESTRIAN PUSH-BUTTON	EACH	4	4
*	89502200	MODIFY EXISTING CONTROLLER	EACH	7	7
*	89502300	REMOVE ELECTRIC CABLE FROM CONDUIT	FOOT	2472	2472
*	89502350	REMOVE AND REINSTALL ELECTRIC CABLE FROM CONDUIT	FOOT	6209	6209
*	89502375	REMOVE EXISTING TRAFFIC SIGNAL EQUIPMENT	EACH	54	54
*	89502380	REMOVE EXISTING HANDHOLE	EACH	14	14
	X0327980	PAVEMENT MARKING REMOVAL - WATER BLASTING	SQ FT	4430	4430
	X4402020	CONCRETE MEDIAN SURFACE REMOVAL	SQ FT	346	346
	X7030005	TEMPORARY PAVEMENT MARKING REMOVAL	SQ FT	3619	3619
*	X8800101	PEDESTRIAN PUSH-BUTTON, SPECIAL	EACH	10	10

* SPECIALTY ITEM

REV. - MS

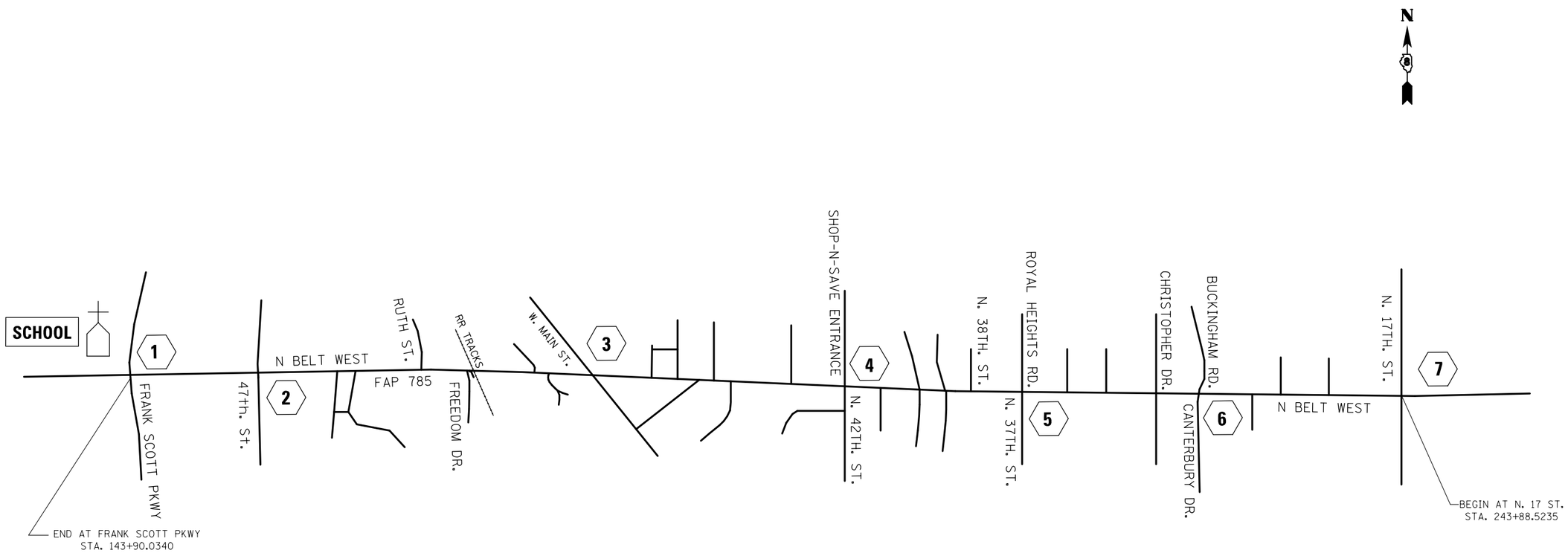

SCALE

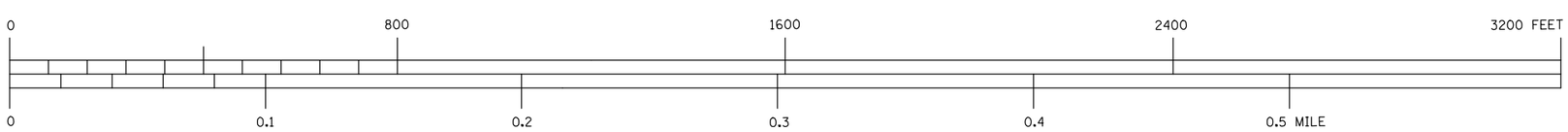

LEGEND

WORK LOCATIONS

CHURCH

SCHOOL — SCHOOL

FILE NAME = pw:\\IL084EBIDINTEG.illinois.gov:PWIDOT\Documents\IDOT Offices\District 8\Projects\D876J81\DrawingData\CADsheets\D876J81-sht-coverbase.dgn	USER NAME = downingch	DESIGNED - _____	REVISED - _____
		DRAWN - _____	REVISED - _____
	PLOT SCALE = 99.9958 ' / in.	CHECKED - _____	REVISED - _____
$MODELNAME$	PLOT DATE = 1/19/2018	DATE - _____	REVISED - _____

STATE OF ILLINOIS
DEPARTMENT OF TRANSPORTATION

WORK AREA LOCATIONS

SCALE: _____ | SHEET ___ OF ___ SHEETS | STA. _____ TO STA. _____

F.A.U. RTE.	SECTION	COUNTY	TOTAL SHEETS	SHEET NO.
9257	(28-1, 122-1, 122-2) SW-1	MADISON	25	5
		CONTRACT NO. 76J81		
		ILLINOIS FED. AID PROJECT		

		FRANK SCOTT PARKWAY				47TH STREET		MAIN STREET				ISLANDS		42ND STREET					
		LOC #1	LOC #1	LOC #1	LOC #1	LOC #2	LOC #2	LOC #3	LOC #3	LOC #3	LOC #3	LOC #3	LOC #3	LOC #4	LOC #4	LOC #4	LOC #4	LOC #4	SUB
		NWQ	NEQ	SEQ	SWQ	NEQ	SEQ	NWQ	NEQ	SEQ	SWQ	NWQ	SEQ	NWQ	NEQ	MEDIAN	SEQ	SWQ	TOTALS
PORTLAND CEMENT CONCRETE SIDEWALK 4 INCH	SQ FT	120	136	131	185	123	110	137	425	123	107	86	125	146	117	41	82	100	2294
DETECTABLE WARNINGS	SQ FT	10	18	10	10	13	13	8	10	8	8	24	17	18	22	20	27	20	256
WATER VALVES TO BE ADJUSTED	EACH		1																1
MANHOLES TO BE ADJUSTED	EACH																		
INLETS TO BE ADJUSTED	EACH							1											1
COMBINATION CURB AND GUTTER , TYPE B-6.06	FOOT											16	20						36
COMBINATION CURB AND GUTTER , TYPE B-6.24	FOOT	6	13	13	35	13	13	24	55	6	6	52	67	16	28	31	15	18	411
CONCRETE MEDIAN SURFACE 4"	SQ FT											103	205						308
THERMOPLASTIC PAVEMENT MARKING - LINE 4"	FOOT							116		98		34	43						291
THERMOPLASTIC PAVEMENT MARKING - LINE 6"	FOOT							68		63		12	15						158
THERMOPLASTIC PAVEMENT MARKING - LINE 12"	FOOT	200	200	200	200	75	75	251	251	251	251			150	150		150	150	2554
COMBINATION CURB AND GUTTER REMOVAL	FOOT	6	13	13	35	13	13	22	55	6	5	76	90	16	19	30	15	19	446
SIDEWALK REMOVAL	SQ FT	120	136	131	185	123	110	137	350	123	104	116	128	146	117	41	82	100	2249
CONCRETE MEDIAN SURFACE REMOVAL	SQ FT											174	172						346
TEMPORARY PAVEMENT MARKING REMOVAL	SQ FT							383	178	385	197			150	150		150	150	1743
PAVEMENT MARKING REMOVAL WATER BLASTING	FOOT	200	200	200	200	75	75	251	251	251	251			150	150		150	150	2554

		ROYAL HEIGHTS RD				CANTEBURY RD				17TH STREET					
		LOC #5	LOC #5	LOC #5	LOC #5	LOC #6	LOC #6	LOC #6	LOC #6	LOC #7	LOC #7	LOC #7	LOC #7	SUB	TOTALS
		NWQ	NEQ	SEQ	SWQ	NWQ	NEQ	SEQ	SWQ	NWQ	NEQ	SEQ	SWQ	TOTALS	
PORTLAND CEMENT CONCRETE SIDEWALK 4 INCH	SQ FT	192	158	148	84	151	134	144	122	200	164	119	129	1745	4039
DETECTABLE WARNINGS	SQ FT	8	8	8	10	38	40	26	16	8	8	8	8	186	442
WATER VALVES TO BE ADJUSTED	EACH														1
MANHOLES TO BE ADJUSTED	EACH						1							1	1
INLETS TO BE ADJUSTED	EACH														1
COMBINATION CURB AND GUTTER , TYPE B-6.06	FOOT														36
COMBINATION CURB AND GUTTER , TYPE B-6.24	FOOT	29	25	6	6	26	21	20	14	8	8	40	6	209	620
CONCRETE MEDIAN SURFACE 4"	SQ FT														308
THERMOPLASTIC PAVEMENT MARKING - LINE 4"	FOOT														291
THERMOPLASTIC PAVEMENT MARKING - LINE 6"	FOOT														158
THERMOPLASTIC PAVEMENT MARKING - LINE 12"	FOOT	174	174	174	174	121	121	121	121	174	174	174	174	1876	4430
COMBINATION CURB AND GUTTER REMOVAL	FOOT	5	5	6	6	26	21	20	14	8	8	40	6	165	611
SIDEWALK REMOVAL	SQ FT	192	158	117	86	151	134	146	122	200	164	119	129	1718	3967
CONCRETE MEDIAN SURFACE REMOVAL	SQ FT														346
TEMPORARY PAVEMENT MARKING REMOVAL	SQ FT	174	174	174	174	121	121	121	121	174	174	174	174	1876	3619
PAVEMENT MARKING REMOVAL WATER BLASTING	FOOT	174	174	174	174	121	121	121	121	174	174	174	174	1876	4430

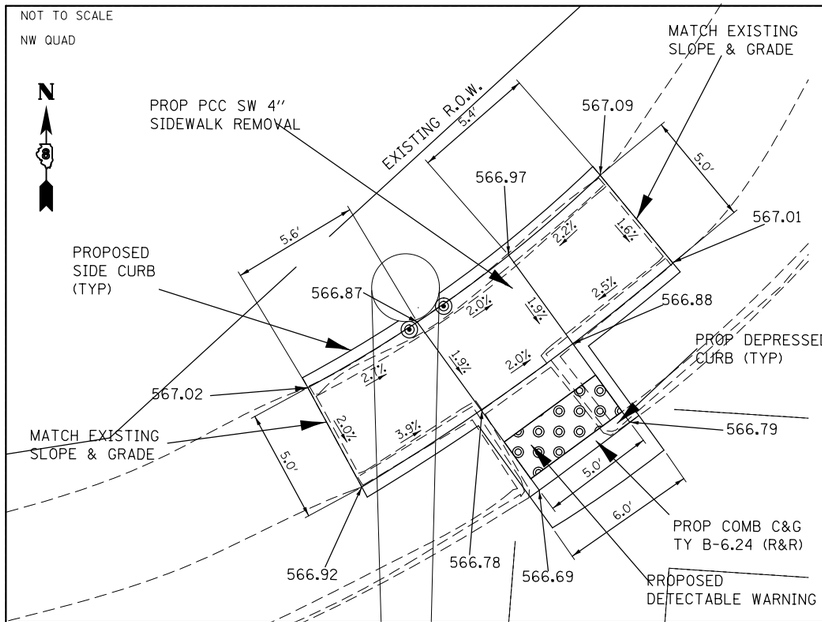

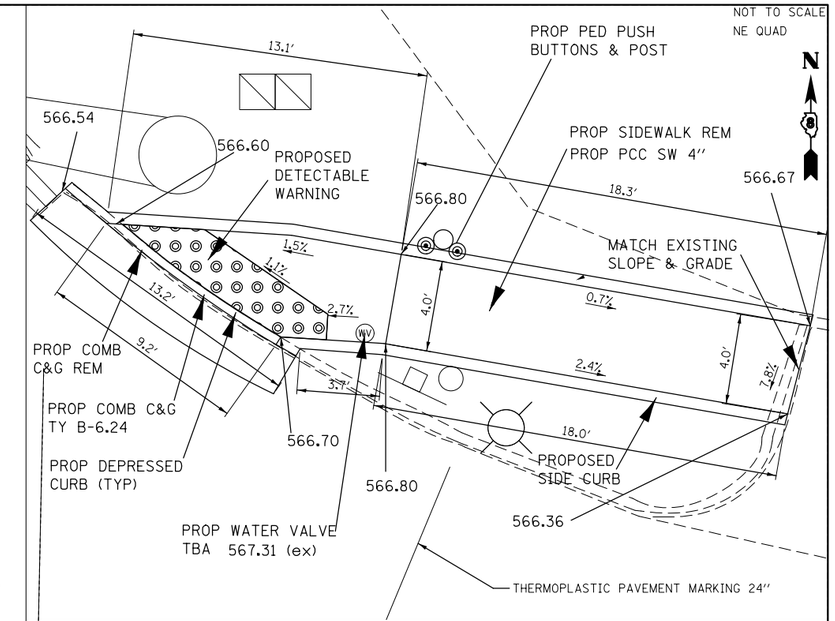

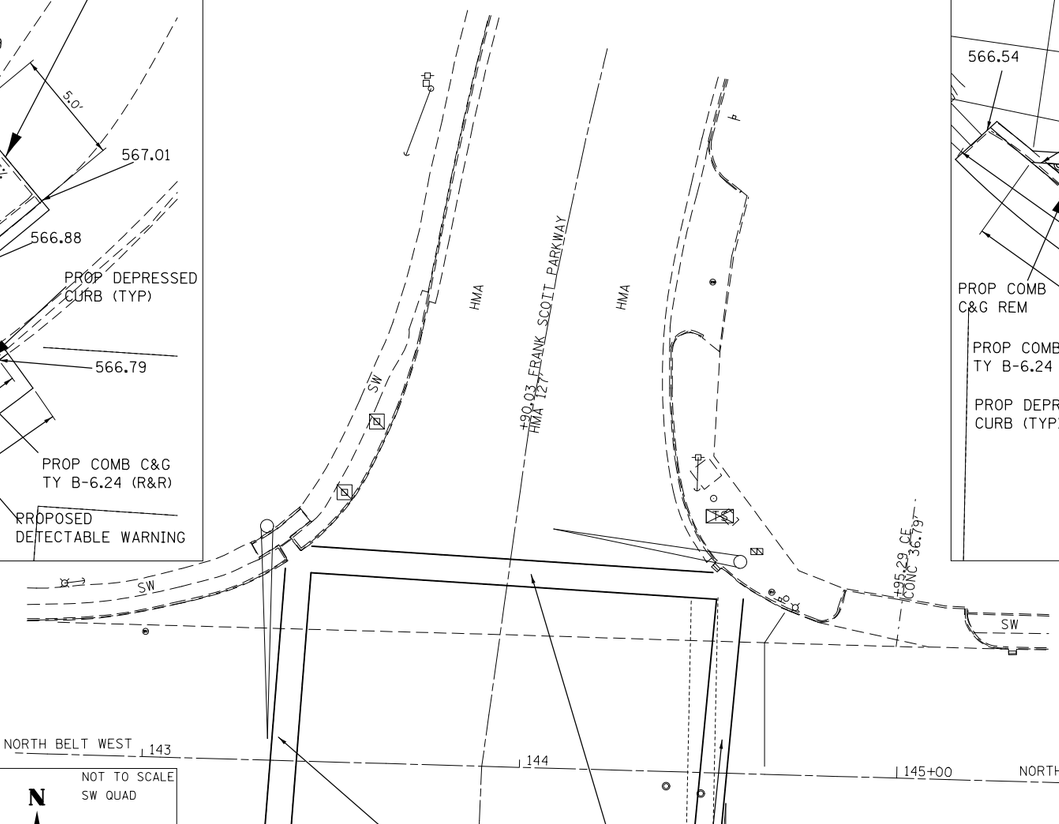

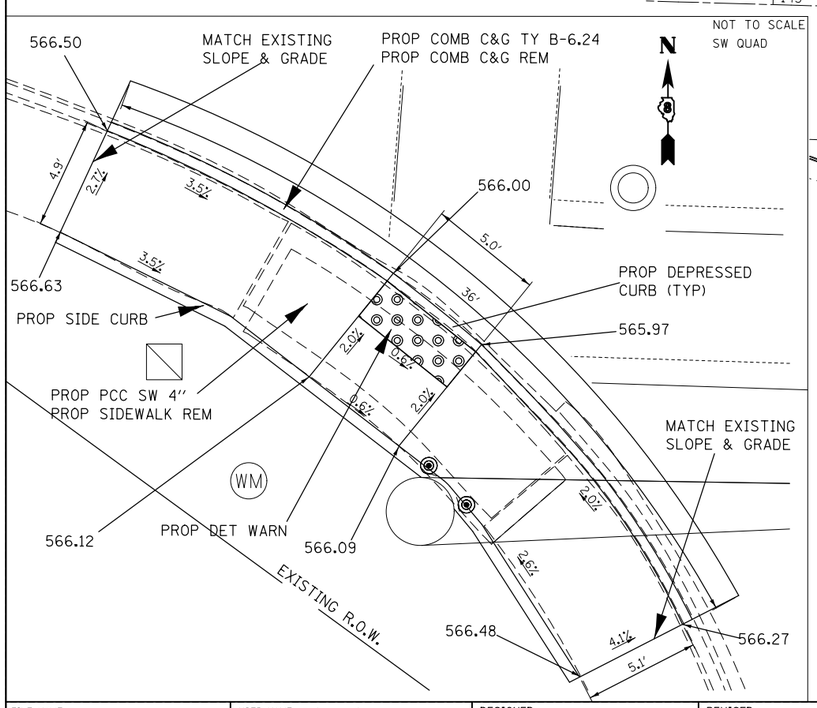

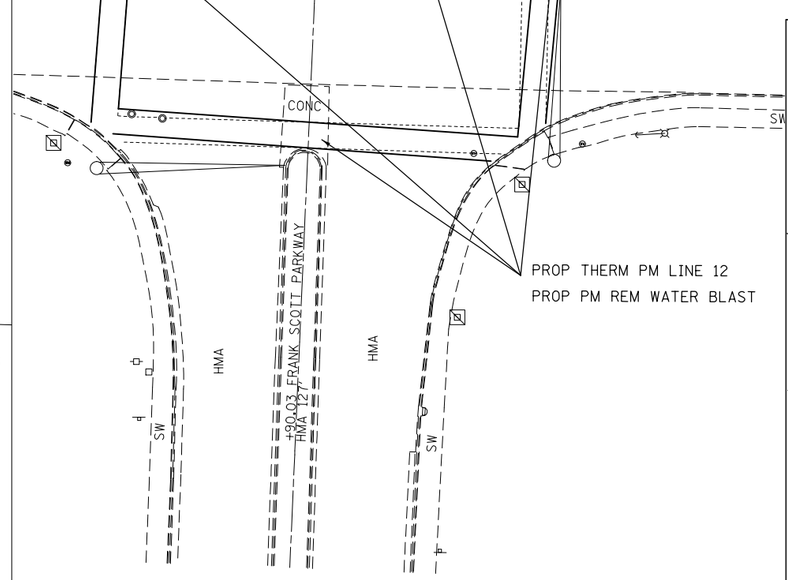

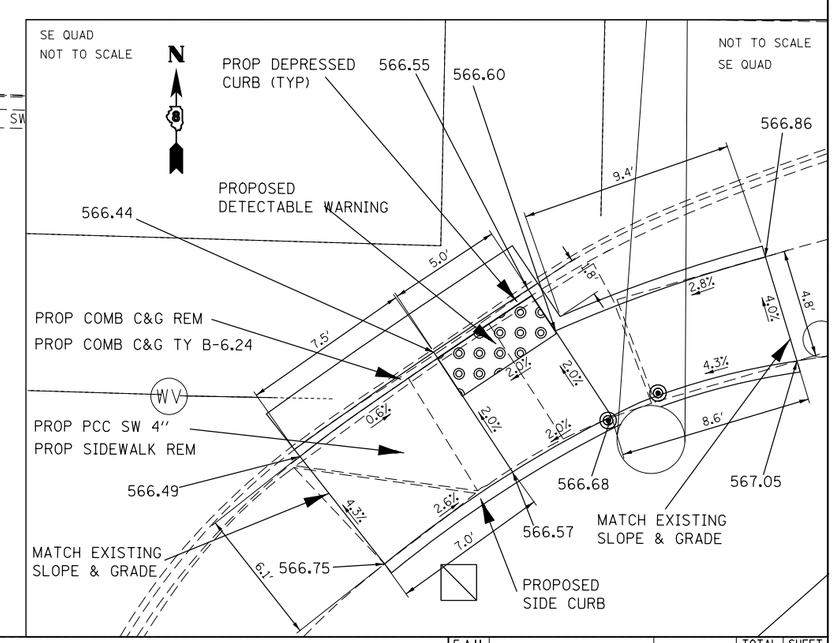

FILE NAME = pw:\\IL084EBIDINTEG.illinois.gov:PWIDOT\Documents\IDOT Offices\District 8\Projects\D876J81\DrawingData\CADsheets\D876J81-sht-plan.dgn	USER NAME = downingch	DESIGNED -	REVISED -
		DRAWN -	REVISED -
	PLOT SCALE = 40.1310 ' / in.	CHECKED -	REVISED -
$MODEL.NAME$	PLOT DATE = 1/22/2018	DATE -	REVISED -

STATE OF ILLINOIS
DEPARTMENT OF TRANSPORTATION

PROPOSED NORTH BELT WEST
FRANK SCOTT PARKWAY

SCALE: _____ SHEET ___ OF ___ SHEETS STA. _____ TO STA. _____

F.A.U. RTE.	SECTION	COUNTY	TOTAL SHEETS	SHEET NO.
9257	(28-1, 122-1, 122-2)SW-1	ST. CLAIR	25	7
		CONTRACT NO. 76J81		
		ILLINOIS FED. AID PROJECT		

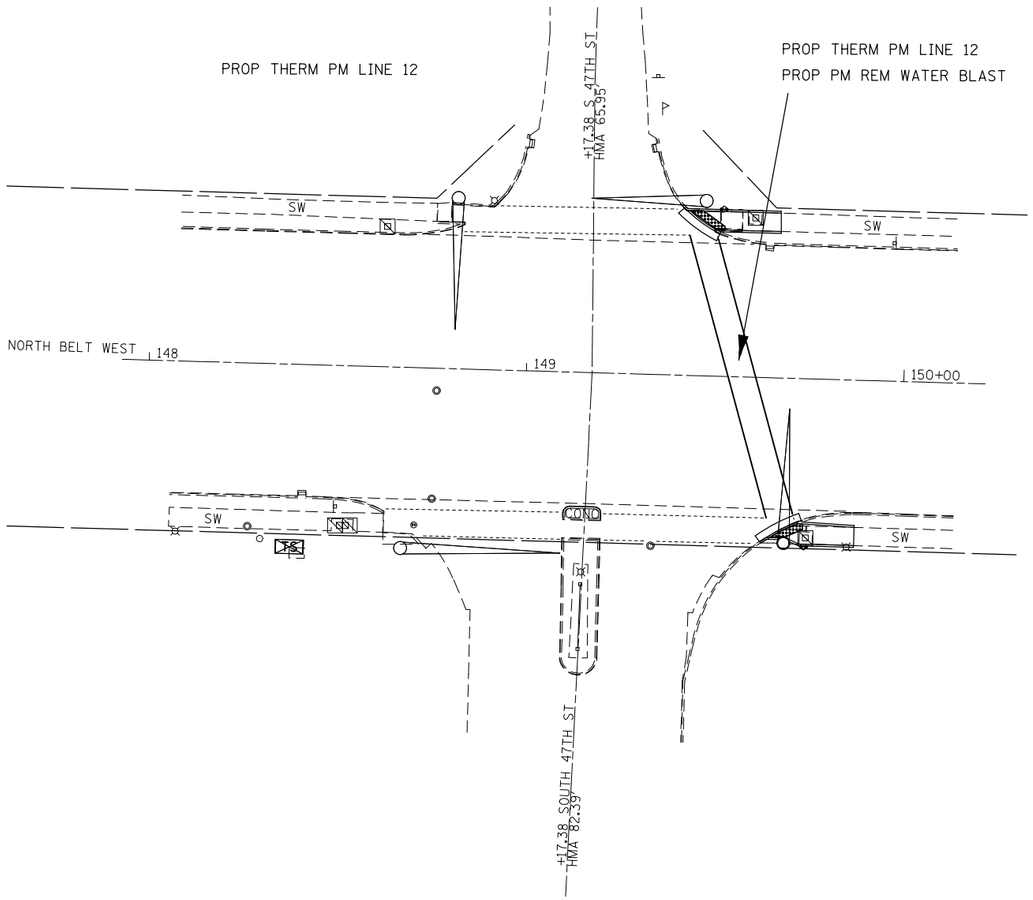

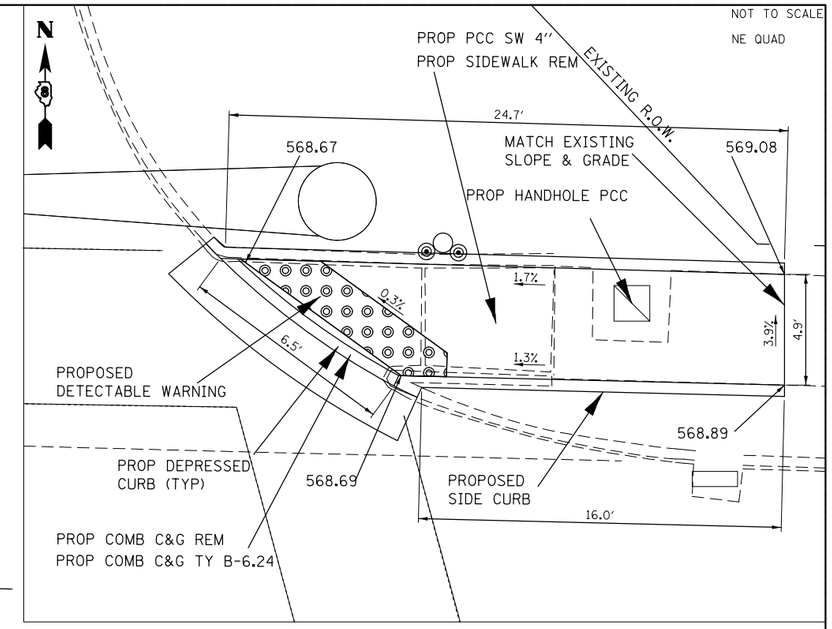

NORTH BELT WEST

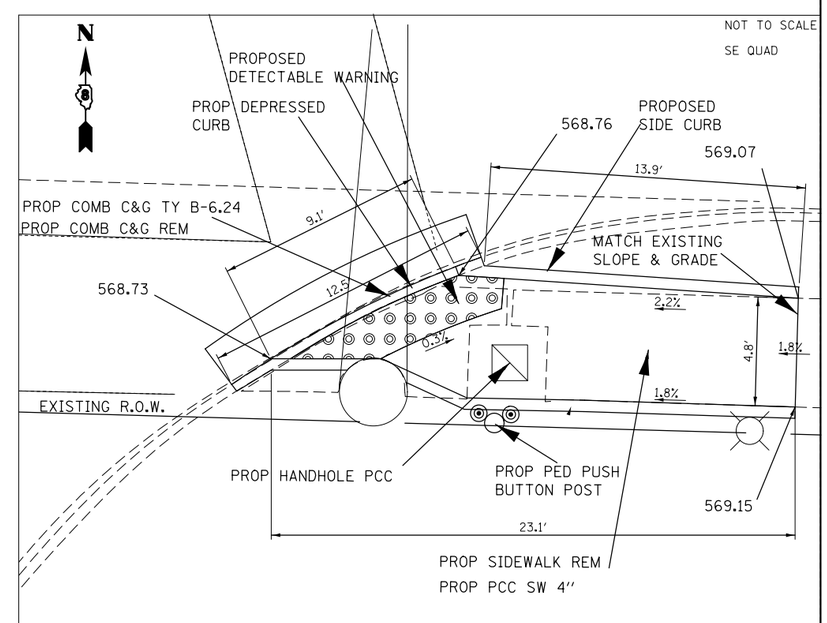

FILE NAME = pw:\\IL084EBIDINTEG.illinois.gov:PWIDOT\Documents\IDOT Offices\District 8\Projects\D876J81\DRAWING Data\GADsheets\D876J81-sht-plan.dgn	USER NAME = downingch	DESIGNED -	REVISED -	STATE OF ILLINOIS DEPARTMENT OF TRANSPORTATION	PROPOSED NORTH BELT WEST 47TH STREET	F.A.U. RTE.	SECTION	COUNTY	TOTAL SHEETS	SHEET NO.
			REVISED -			9257	(28-1, 122-1, 122-2)SW-1	ST. CLAIR	25	8
	PLOT SCALE = 40.1303 ' / in.	CHECKED -	REVISED -					CONTRACT NO. 76J81		
$MODELNAME$	PLOT DATE = 1/22/2018	DATE -	REVISED -		SCALE: ____ SHEET ___ OF ___ SHEETS STA. ____ TO STA. ____		ILLINOIS FED. AID PROJECT			

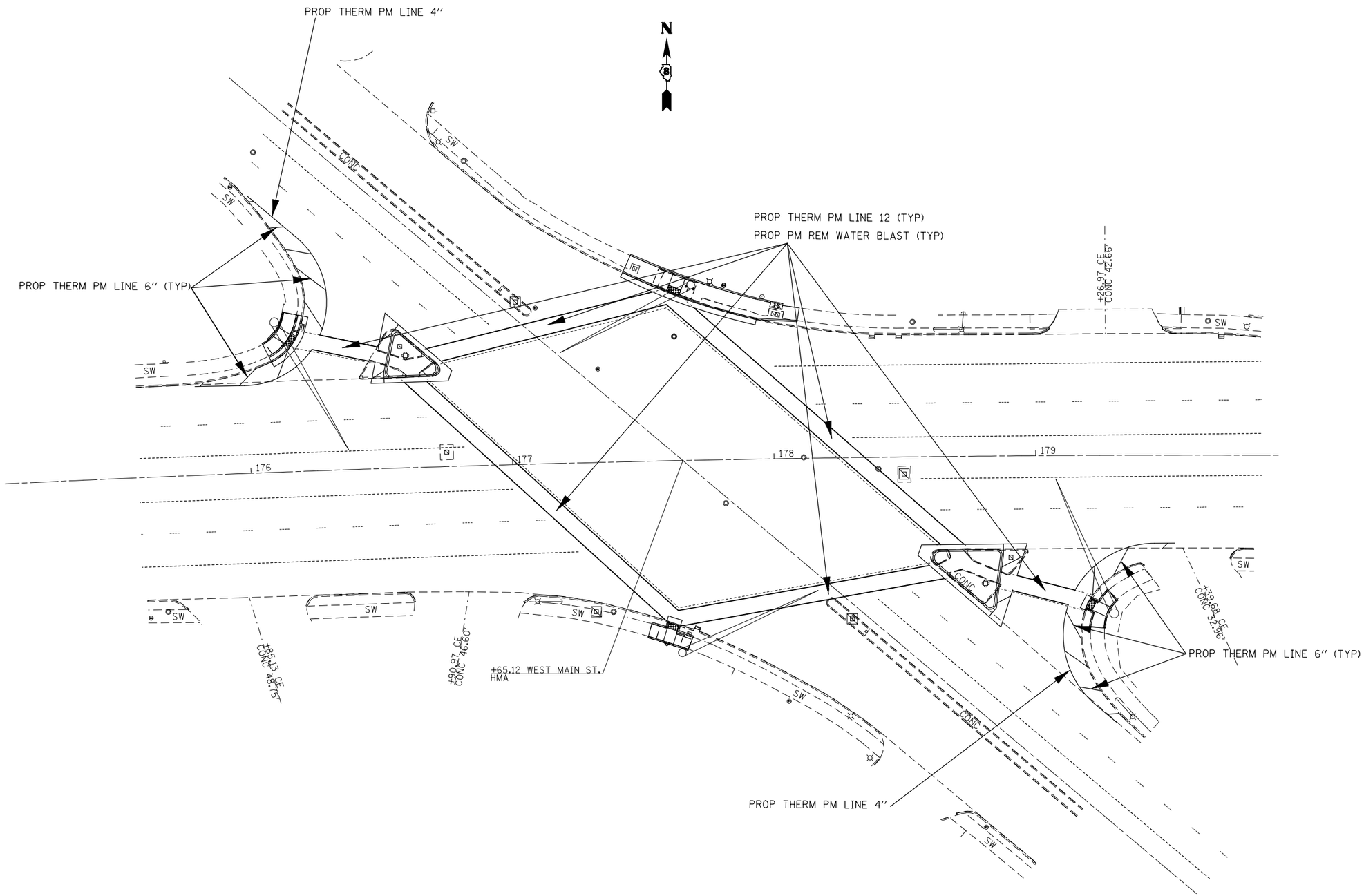

FILE NAME = pw:\\IL084EBIDINTEG.illinois.gov:PWIDOT\Documents\IDOT Offices\District 8\Projects\D876J81\DrawingData\GADsheets\D876J81-sht-plan.dgn	USER NAME = downingch	DESIGNED -	REVISED -	STATE OF ILLINOIS DEPARTMENT OF TRANSPORTATION	PROPOSED NORTH BELT WEST WEST MAIN PAVEMENT MARKING	F.A.U. RTE.	SECTION	COUNTY	TOTAL SHEETS / SHEET NO.
		DRAWN -	REVISED -			9257	(28-1, 122-1, 122-2)SW-1	ST. CLAIR	25 / 9
	PLOT SCALE = 40.0143 ' / in.	CHECKED -	REVISED -					CONTRACT NO. 76J81	
$MODELNAME$	PLOT DATE = 1/22/2018	DATE -	REVISED -		SCALE: ____ SHEET ___ OF ___ SHEETS STA. ____ TO STA. ____		ILLINOIS	FED. AID PROJECT	

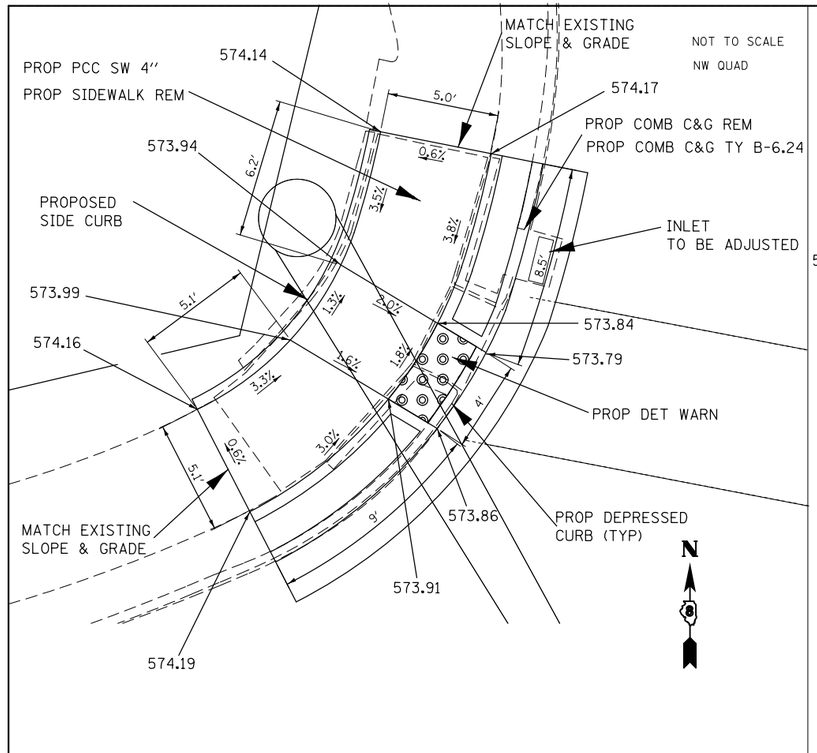

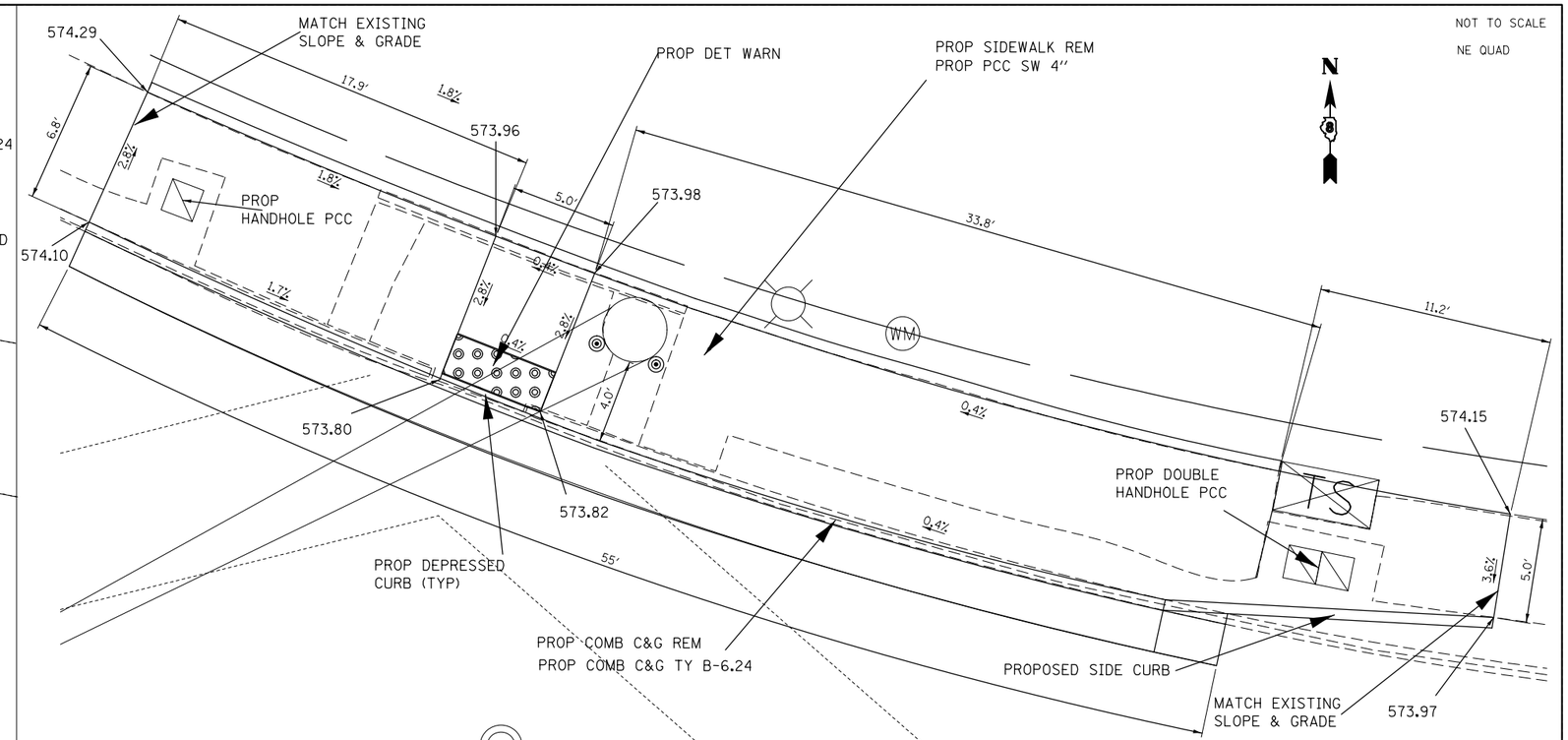

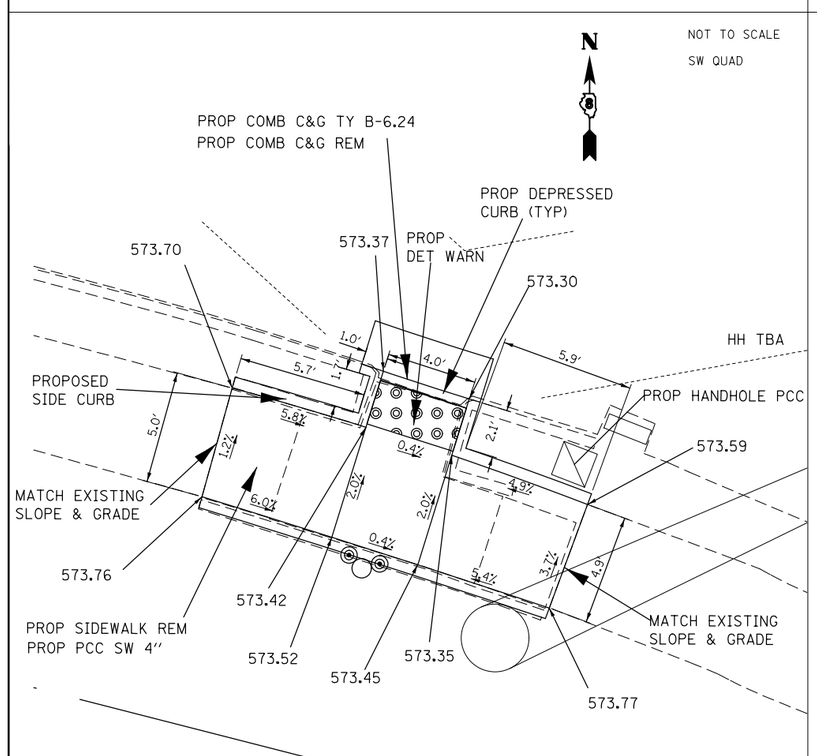

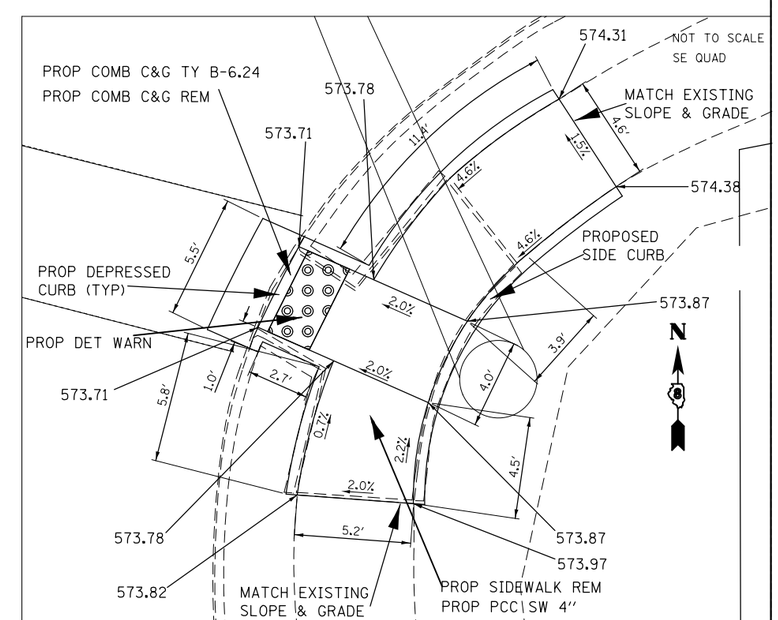

FILE NAME = pw:\\IL084EBIDINTEG.illinois.gov:PWIDOT\Documents\IDOT Offices\District 8\Projects\D876J81\DRAWINGS\Data\GADsheets\D876J81-sht-plan.dgn	USER NAME = downingch	DESIGNED -	REVISED -
		DRAWN -	REVISED -
	PLOT SCALE = 40.2632 ' / in.	CHECKED -	REVISED -
$MODELNAME$	PLOT DATE = 1/22/2018	DATE -	REVISED -

STATE OF ILLINOIS
DEPARTMENT OF TRANSPORTATION

PROPOSED NORTH BELT WEST
WEST MAIN RAMP DETAILS

SCALE: _____ SHEET ___ OF ___ SHEETS STA. _____ TO STA. _____

F.A.U. RTE.	SECTION	COUNTY	TOTAL SHEETS	SHEET NO.
9257	(28-1, 122-1, 122-2)SW-1	ST. CLAIR	25	10
		CONTRACT NO. 76J81		
		ILLINOIS FED. AID PROJECT		

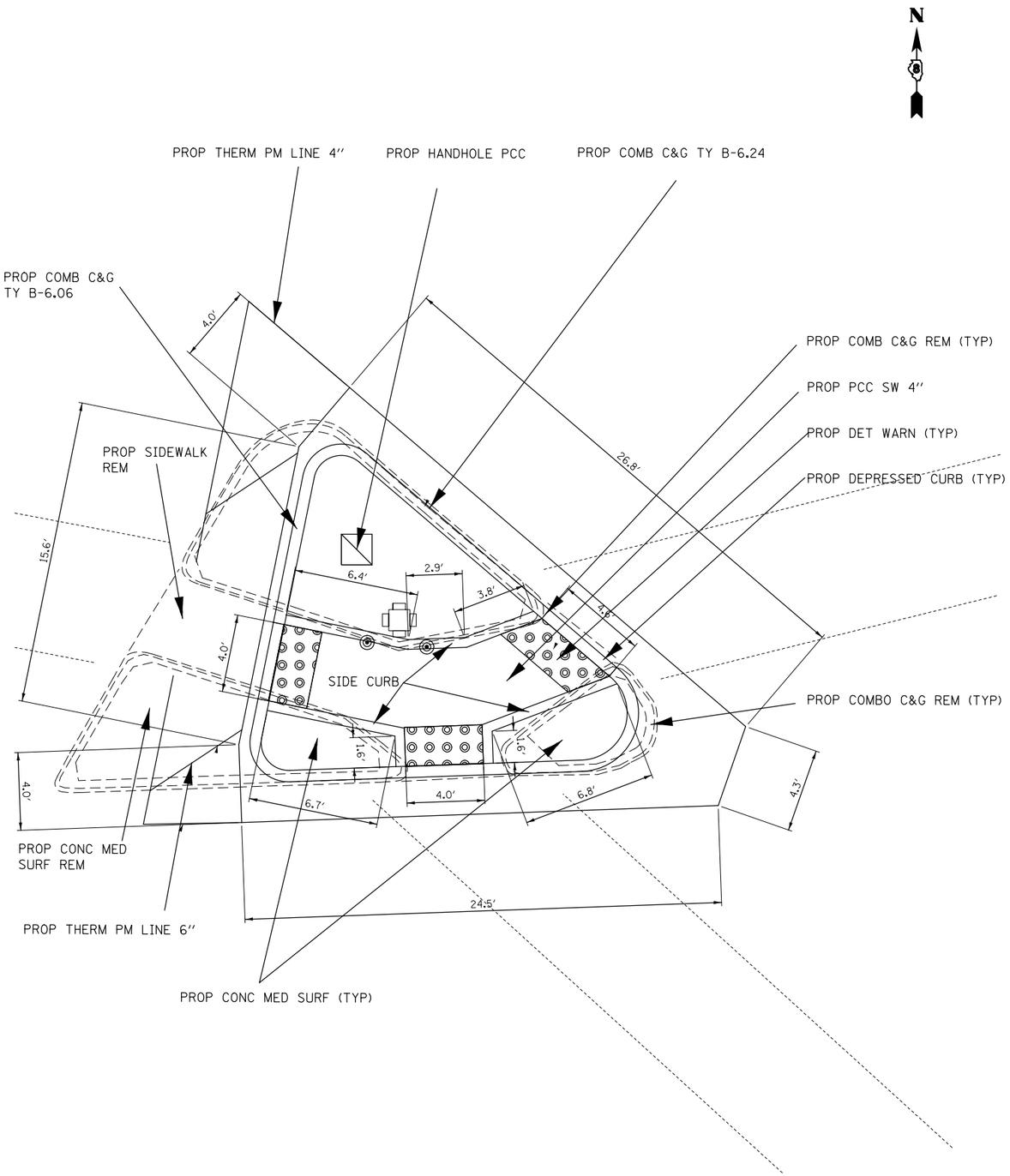

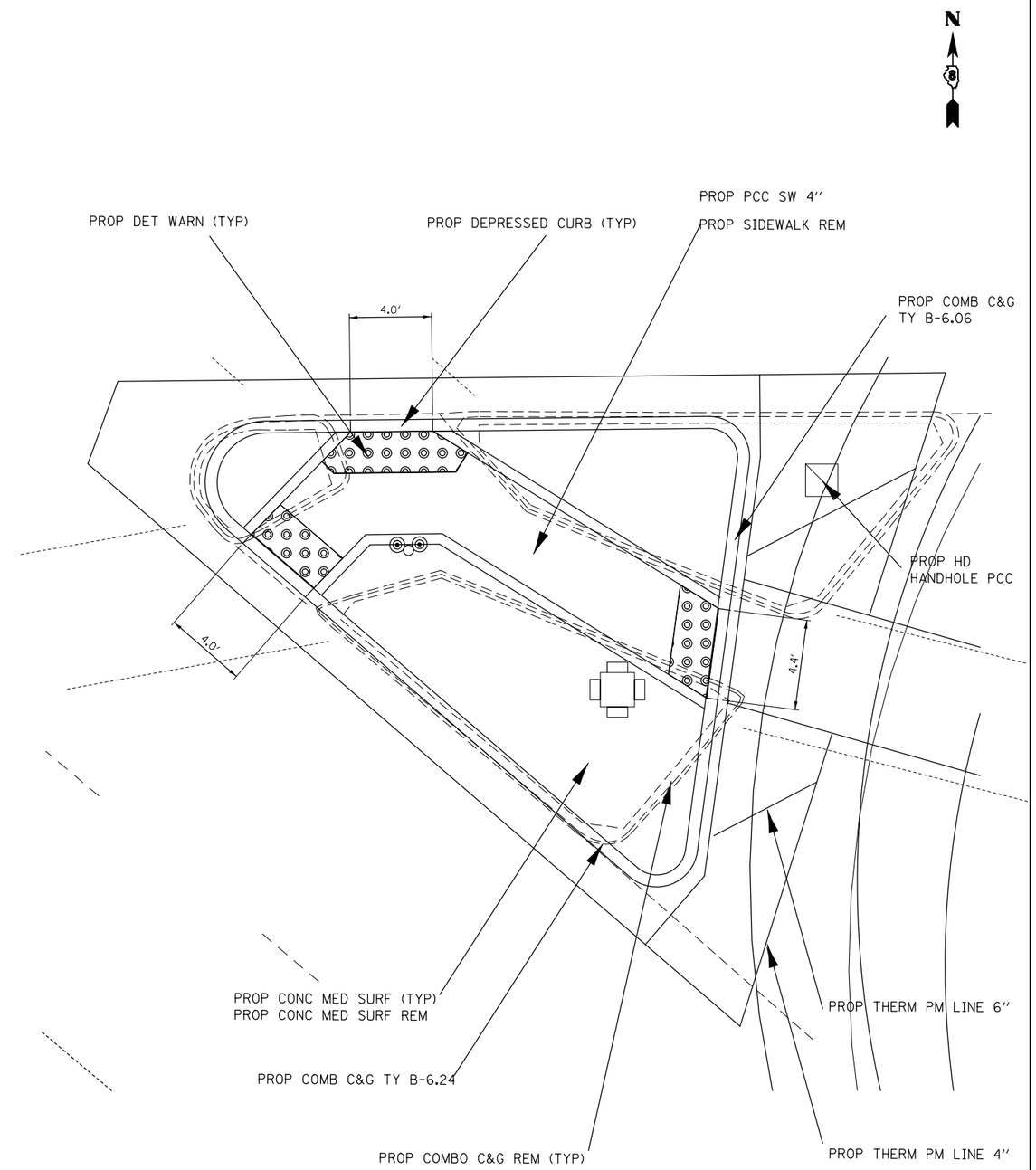

FILE NAME = pw:\\IL084EBIDINTEG.illinois.gov:PWIDOT\Documents\IDOT Offices\District 8\Projects\D876J81\DRAWING Data\CADsheets\D876J81-sht-plan.dgn	USER NAME = downingch	DESIGNED -	REVISED -
			REVISED -
	PLOT SCALE = 40.0143 ' / in.	CHECKED -	REVISED -
$MODELNAME$	PLOT DATE = 1/22/2018	DATE -	REVISED -

STATE OF ILLINOIS
DEPARTMENT OF TRANSPORTATION

NORTH BELT WEST
WEST MAIN ISLAND DETAILS

SCALE: _____ SHEET ___ OF ___ SHEETS STA. _____ TO STA. _____

F.A.U. RTE.	SECTION	COUNTY	TOTAL SHEETS	SHEET NO.
9257	(28-1, 122-1, 122-2)SW-1	ST. CLAIR	25	11
		CONTRACT NO. 76J81		
		ILLINOIS FED. AID PROJECT		

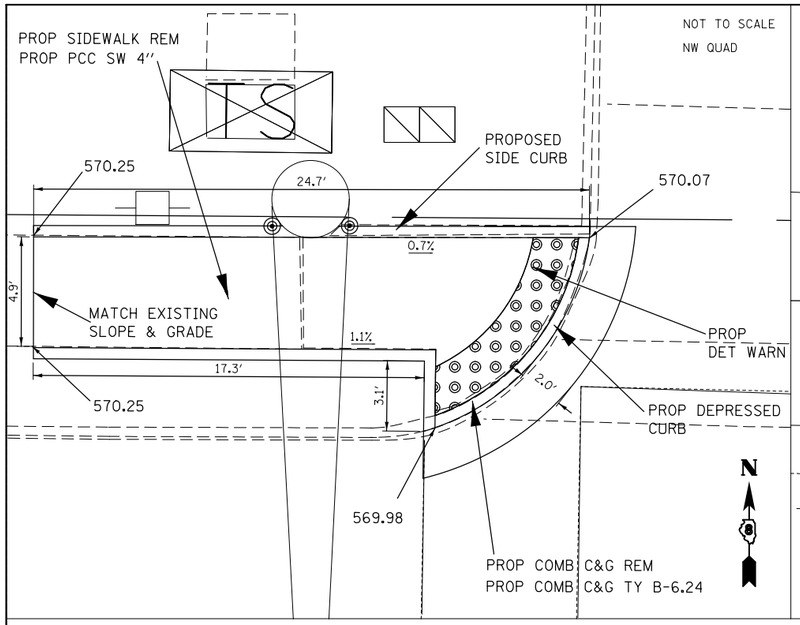

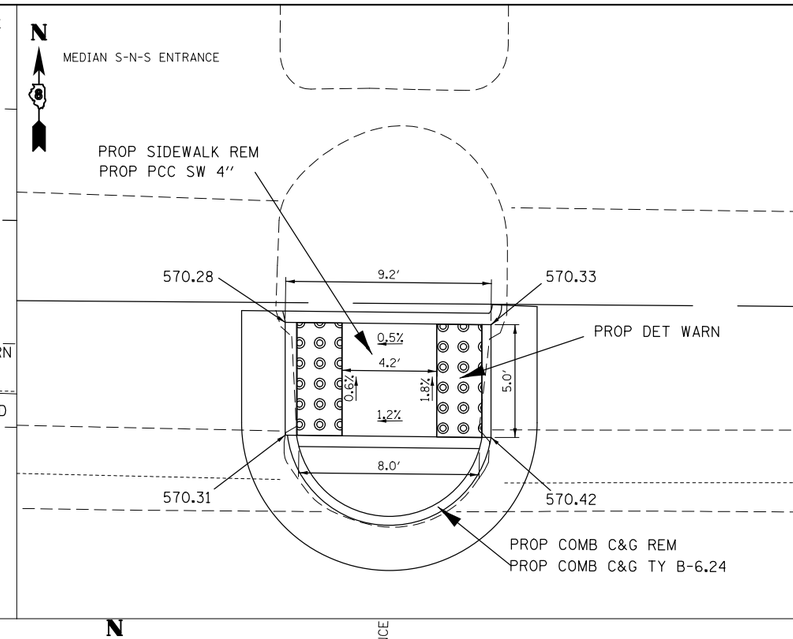

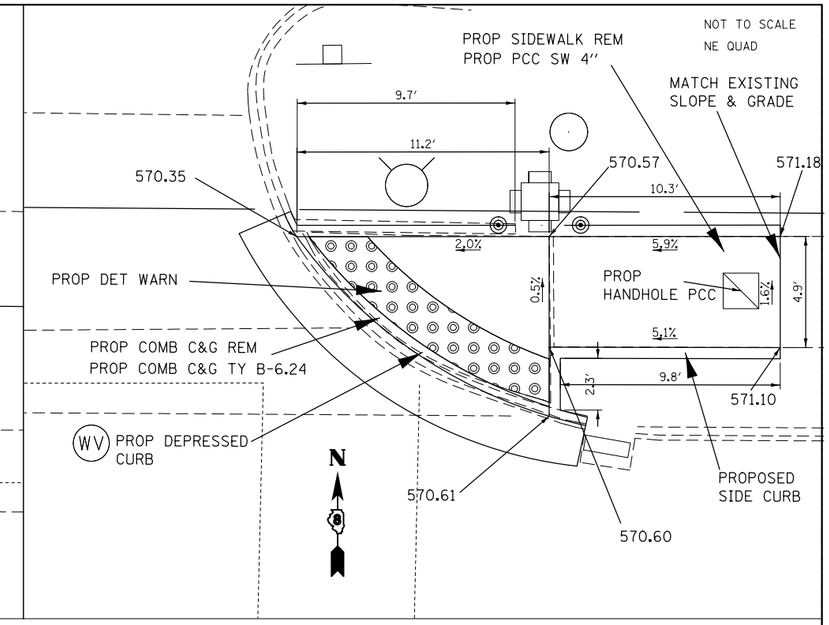

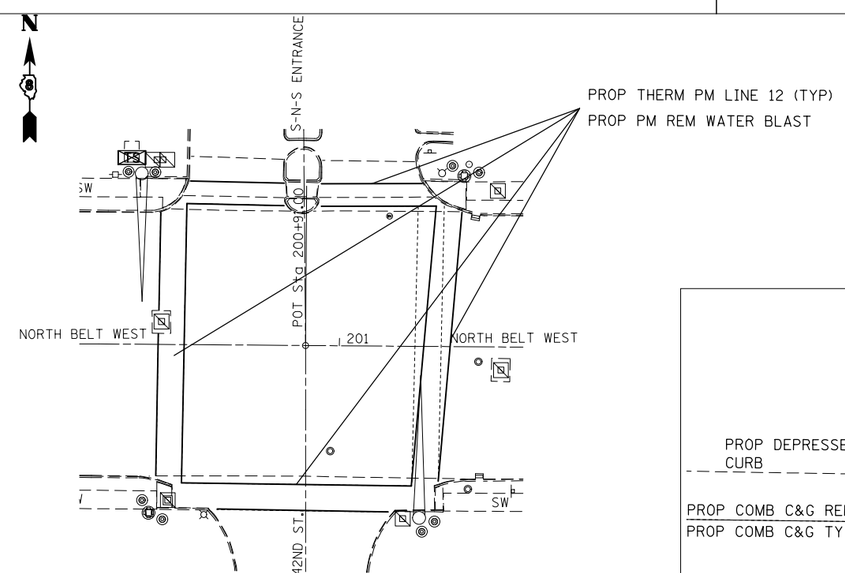

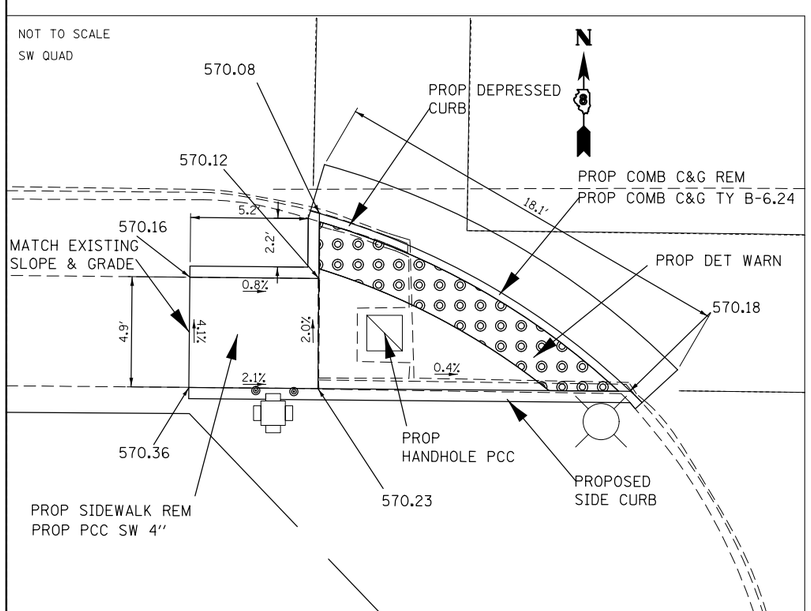

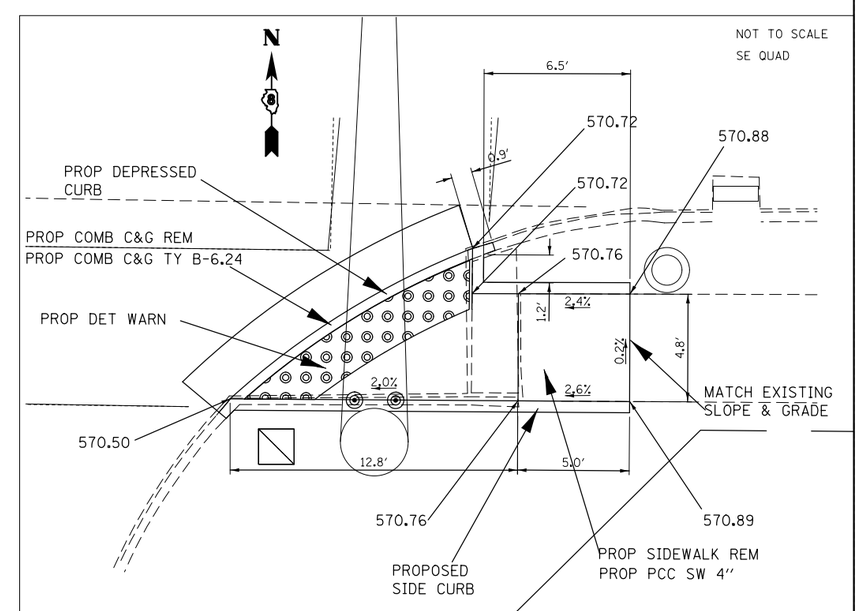

FILE NAME = pw:\\IL084EBIDINTEG.illinois.gov:PWIDOT\Documents\IDOT Offices\District 8\Projects\D876J81\DRAWING Data\CADsheets\D876J81-sht-plan.dgn	USER NAME = downingch	DESIGNED -	REVISED -
		CHECKED -	REVISED -
$MODELNAME$	PLOT SCALE = 40.3061 ' / in.	DATE -	REVISED -
	PLOT DATE = 1/22/2018		REVISED -

STATE OF ILLINOIS
DEPARTMENT OF TRANSPORTATION

PROPOSED NORTH BELT WEST
42ND ST. S-N-S

SCALE: _____ SHEET ___ OF ___ SHEETS STA. _____ TO STA. _____

F.A.U. RTE.	SECTION	COUNTY	TOTAL SHEETS	SHEET NO.
9257	(28-1, 122-1, 122-2)SW-1	ST. CLAIR	25	12
		CONTRACT NO. 76J81		
		ILLINOIS FED. AID PROJECT		

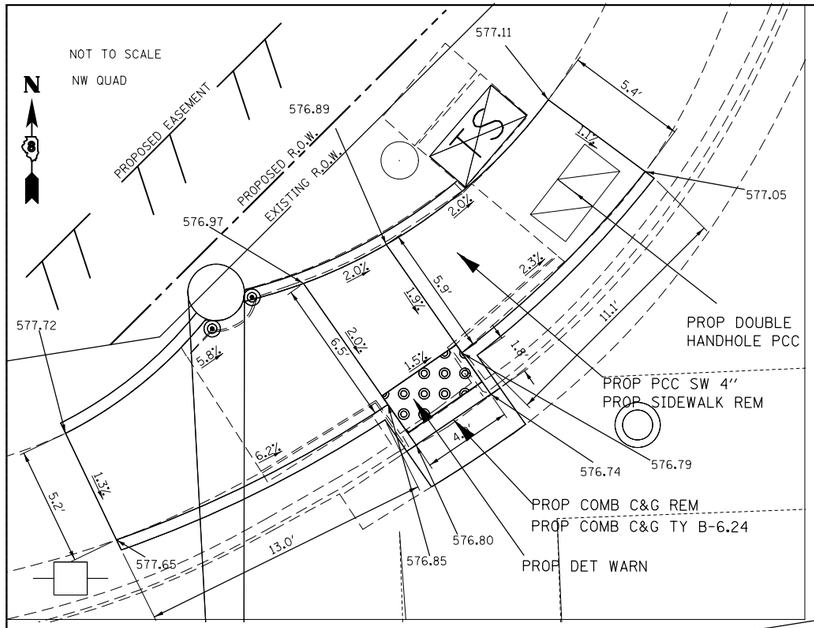

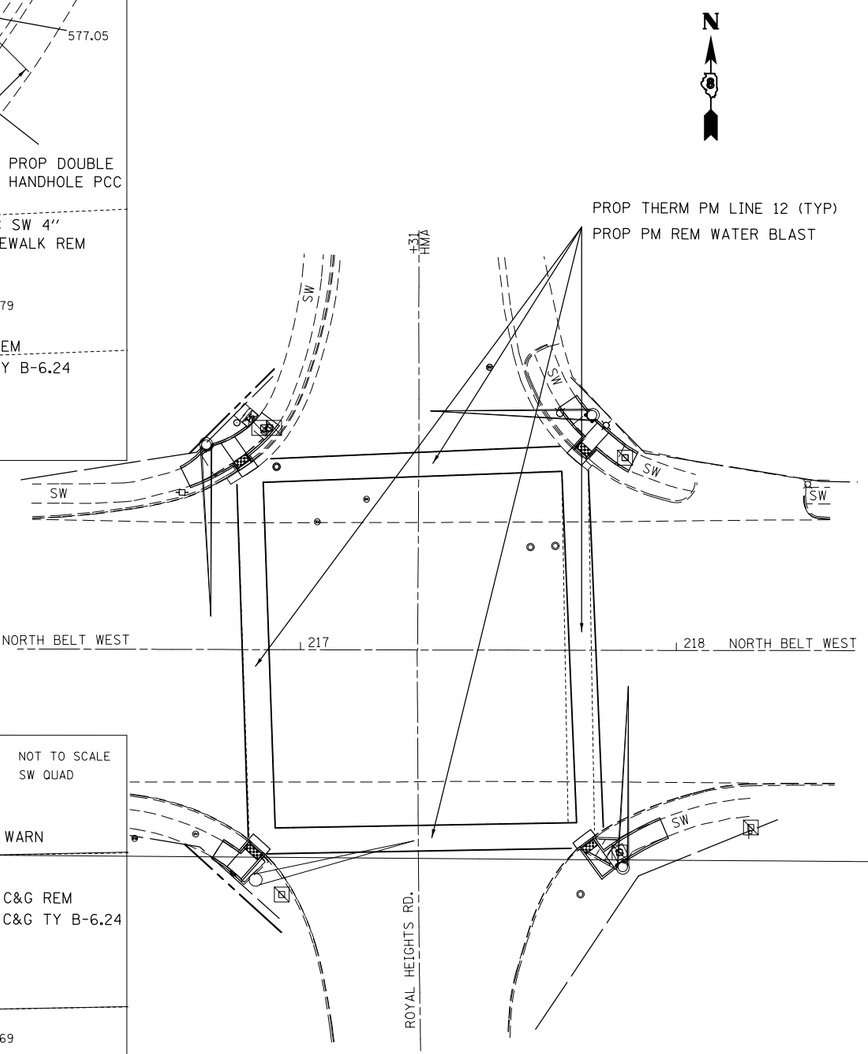

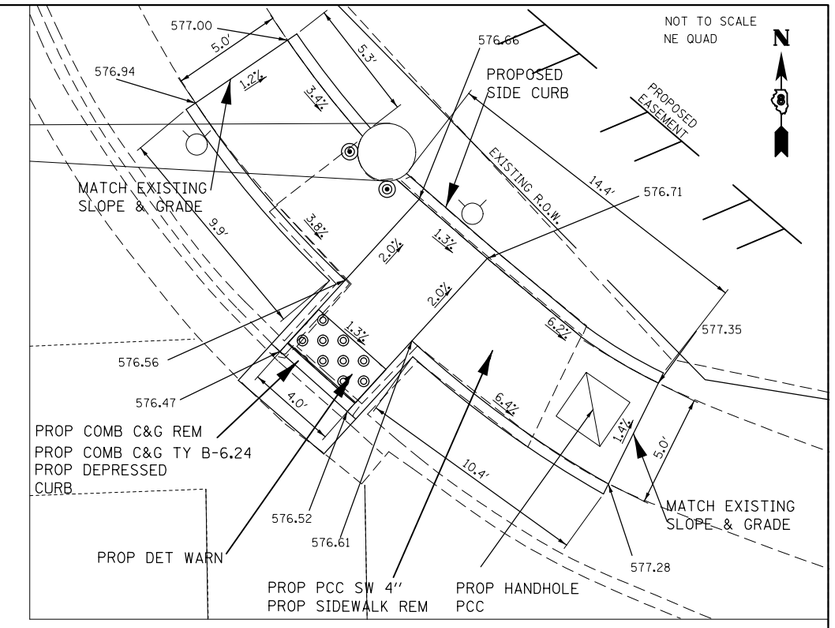

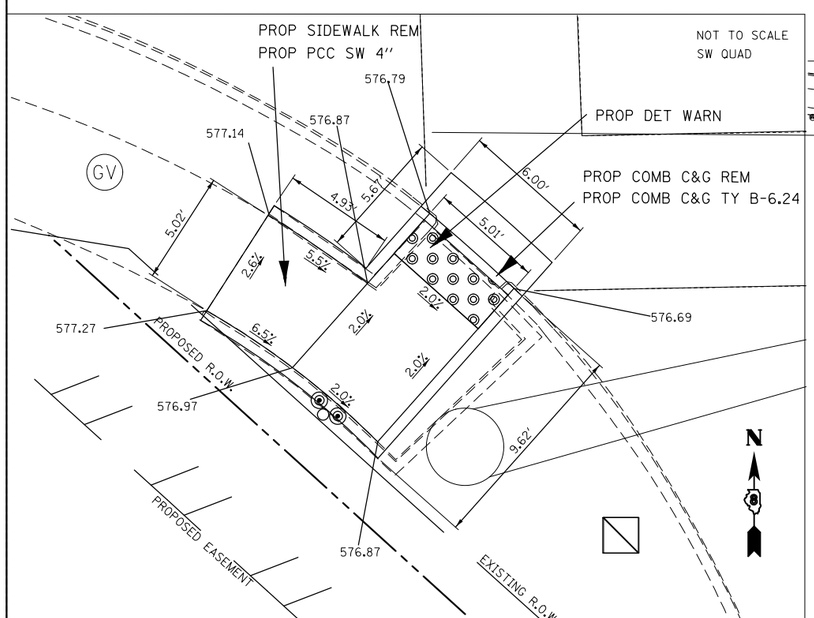

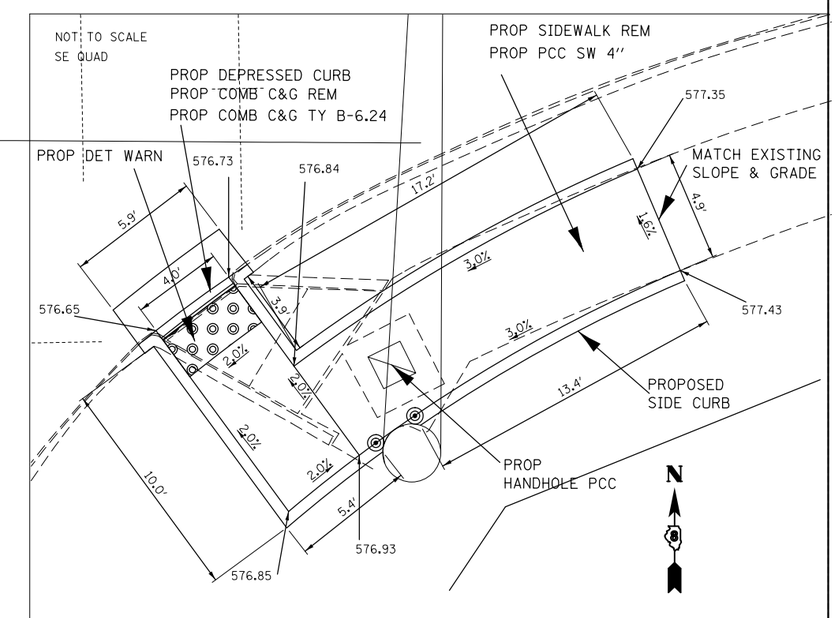

FILE NAME = pw:\\IL084EBIDINTEG.illinois.gov:PWIDOT\Documents\IDOT Offices\District 8\Projects\D876J81\DRAWINGS\Data\GADsheets\D876J81-sht-plan.dgn	USER NAME = downingch	DESIGNED - _____	REVISED - _____
		DRAWN - _____	REVISED - _____
	PLOT SCALE = 40.3061 ' / in.	CHECKED - _____	REVISED - _____
$MODELNAME$	PLOT DATE = 1/22/2018	DATE - _____	REVISED - _____

STATE OF ILLINOIS
DEPARTMENT OF TRANSPORTATION

PROPOSED NORTH BELT WEST
ROYAL HEIGHTS RD.

SCALE: _____ SHEET ___ OF ___ SHEETS STA. _____ TO STA. _____

F.A.U. RTE.	SECTION	COUNTY	TOTAL SHEETS	SHEET NO.
9257	(28-1, 122-1, 122-2)SW-1	ST. CLAIR	25	13
		CONTRACT NO. 76J81		
		ILLINOIS FED. AID PROJECT		

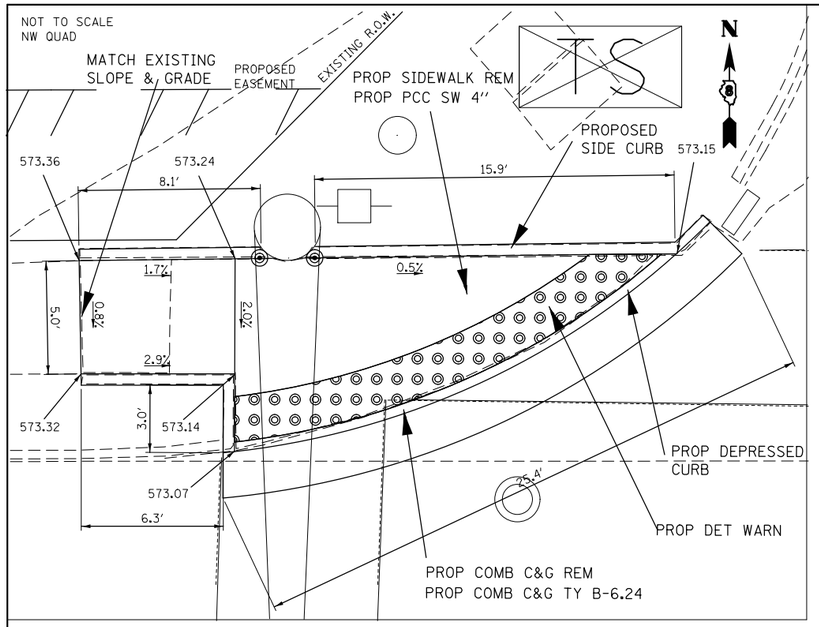

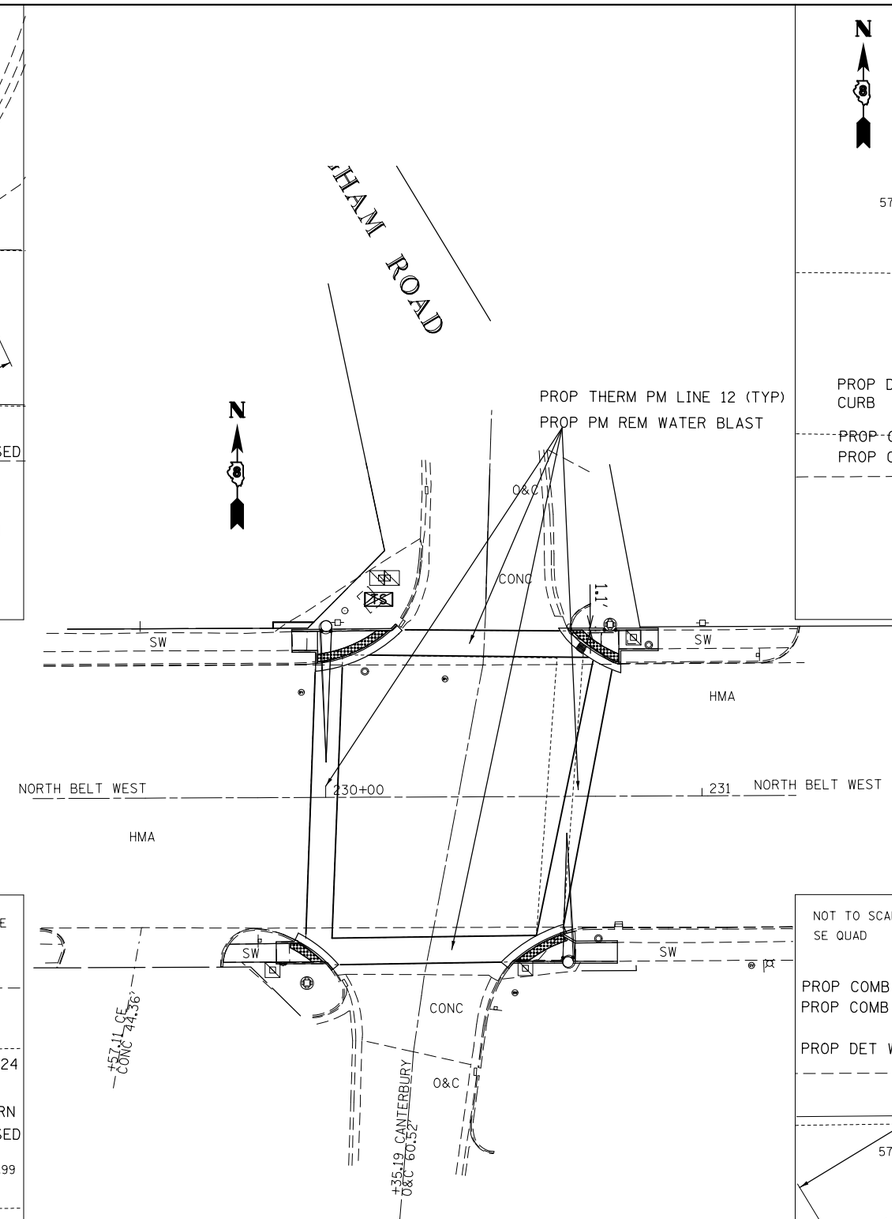

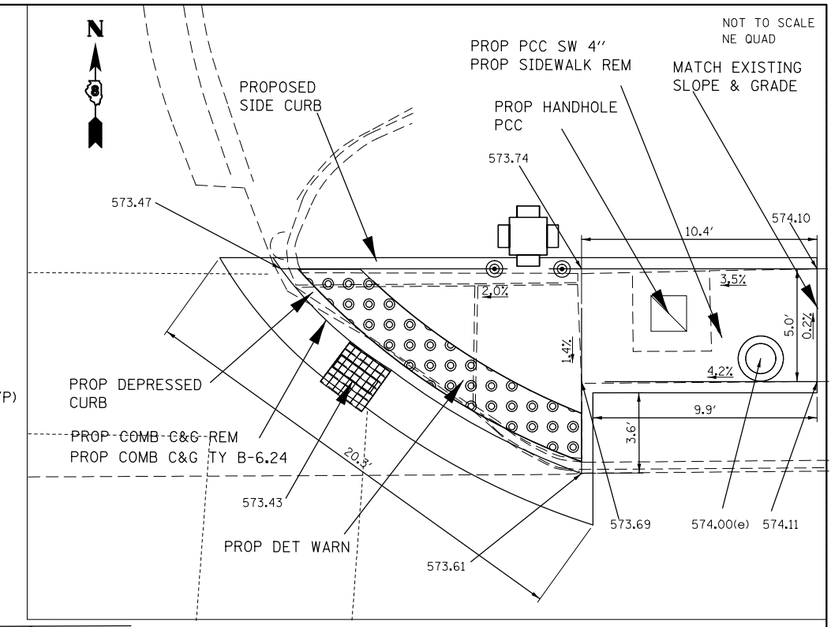

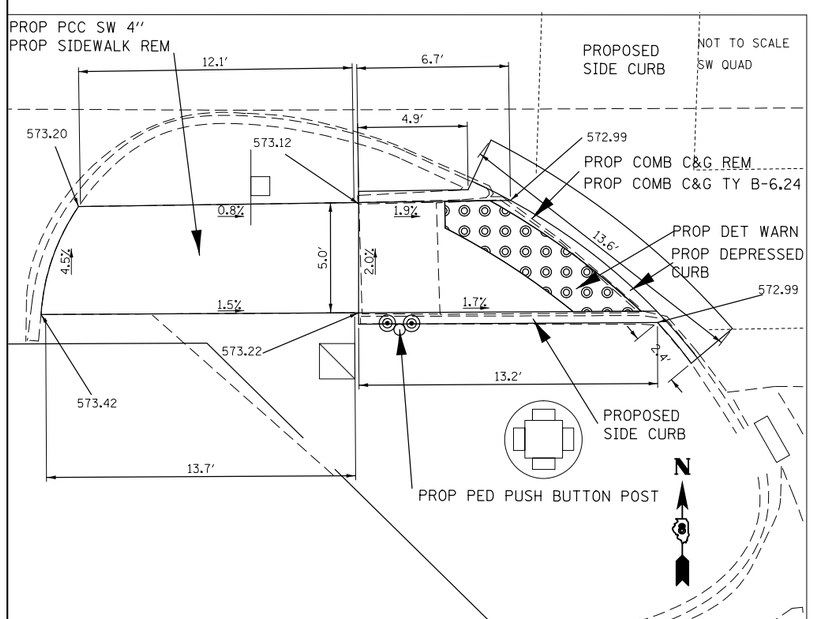

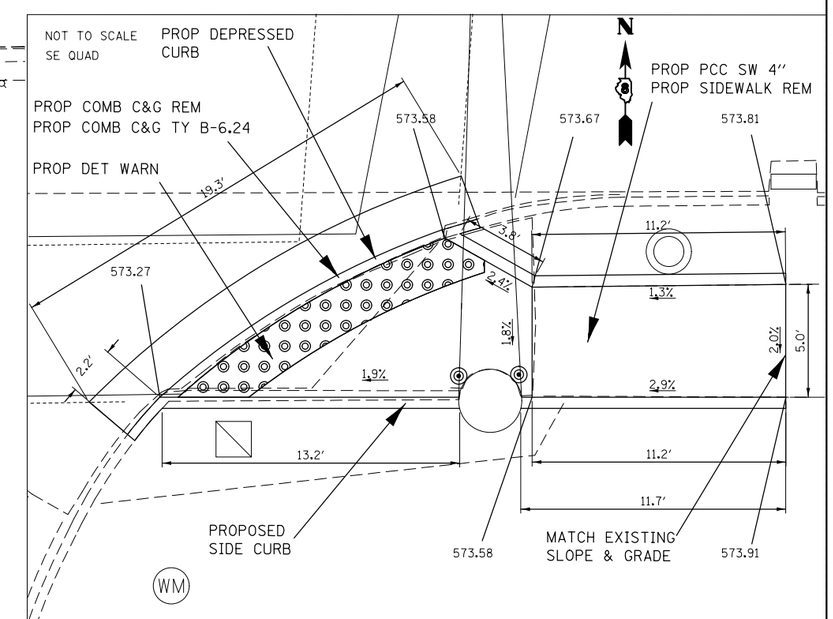

FILE NAME = p:\\IL084EBIDINTEG.illinois.gov\PWIDOT\Documents\IDOT Offices\District 8\Projects\D876J81\DRAWINGS\Data\GADsheets\D876J81-sht-plan.dgn	USER NAME = downingch	DESIGNED -	REVISED -
		DRAWN -	REVISED -
	PLOT SCALE = 40.2632 ' / in.	CHECKED -	REVISED -
$MODELNAME$	PLOT DATE = 1/22/2018	DATE -	REVISED -

STATE OF ILLINOIS
DEPARTMENT OF TRANSPORTATION

PROPOSED NORTH BELT WEST
CANTERBURY RD.

SCALE: _____ | SHEET ___ OF ___ SHEETS | STA. _____ TO STA. _____

F.A.U. RTE.	SECTION	COUNTY	TOTAL SHEETS	SHEET NO.
9257	(28-1, 122-1, 122-2)SW-1	ST. CLAIR	25	14
		CONTRACT NO. 76J81		
		ILLINOIS FED. AID PROJECT		

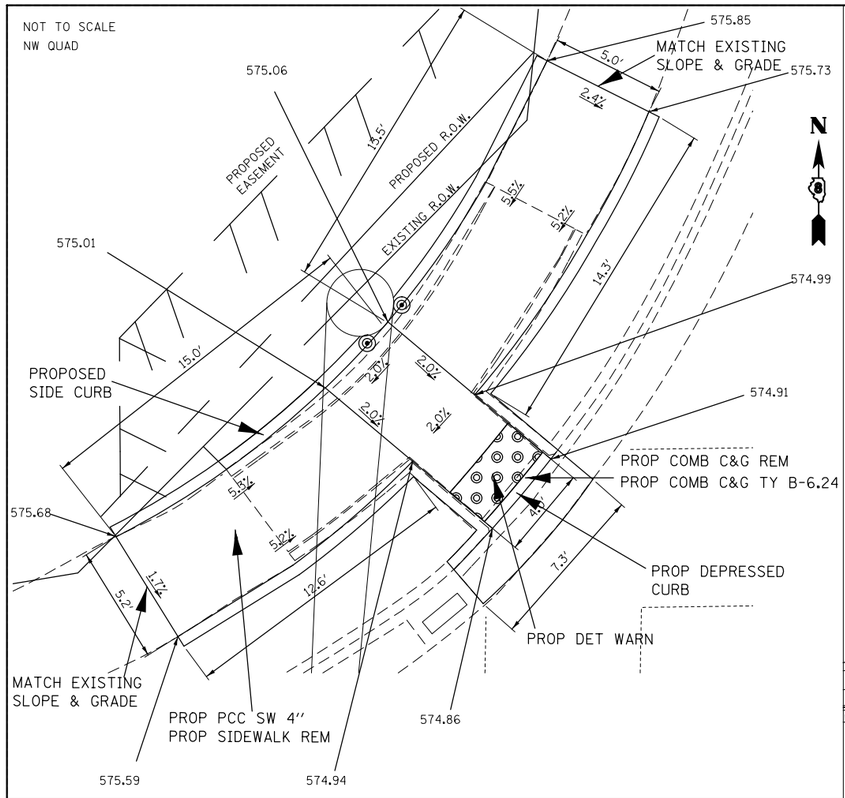

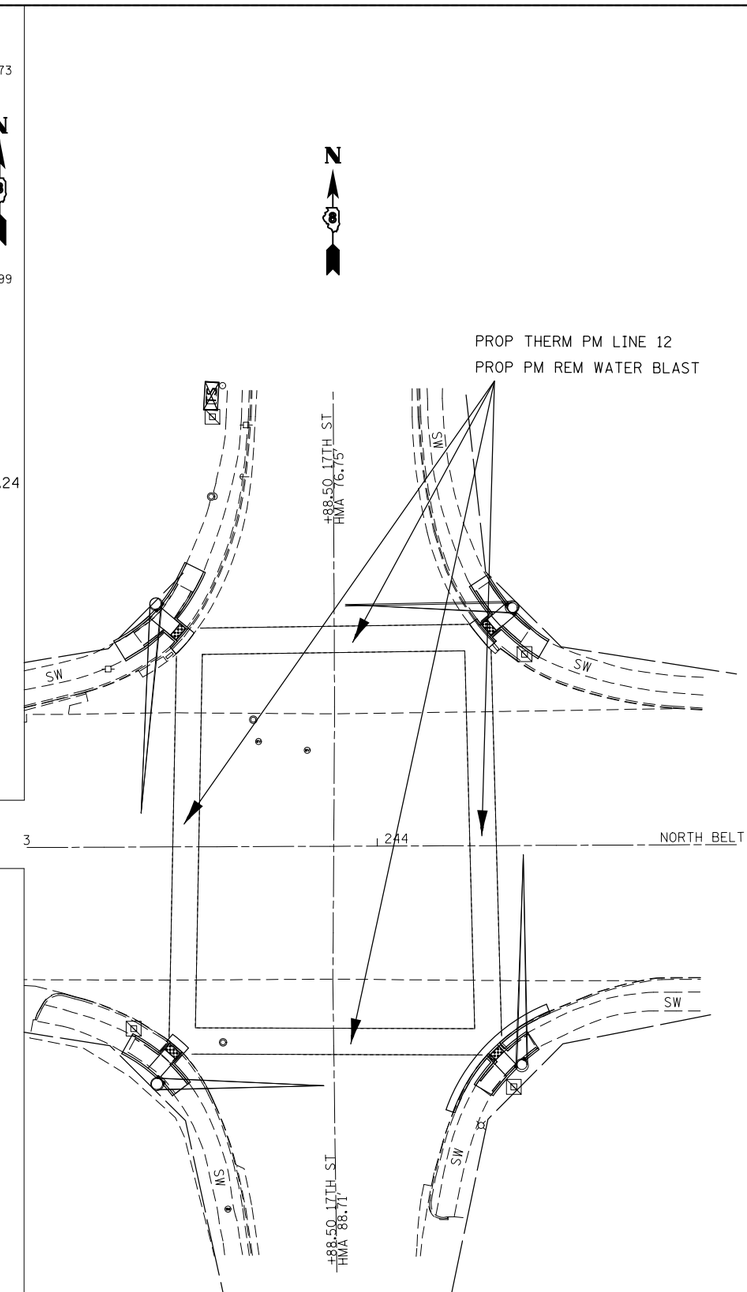

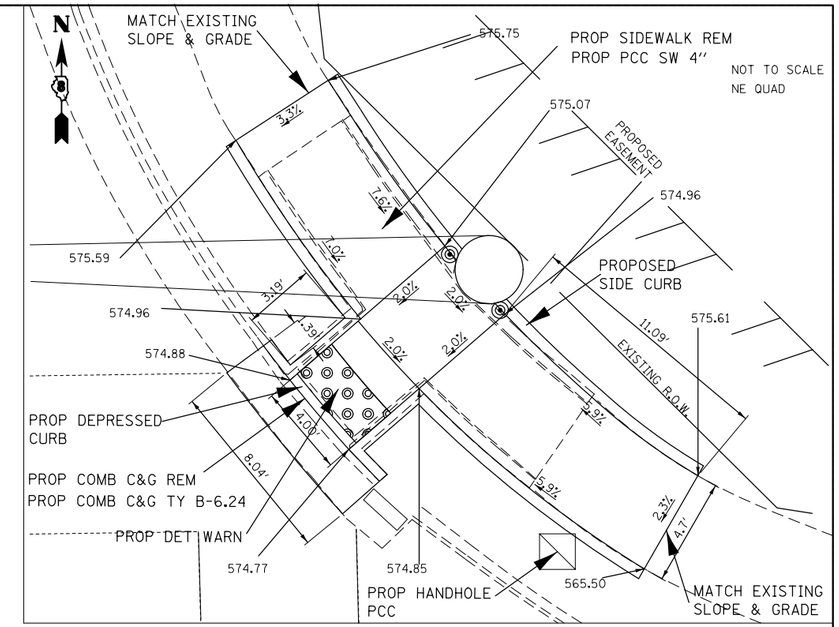

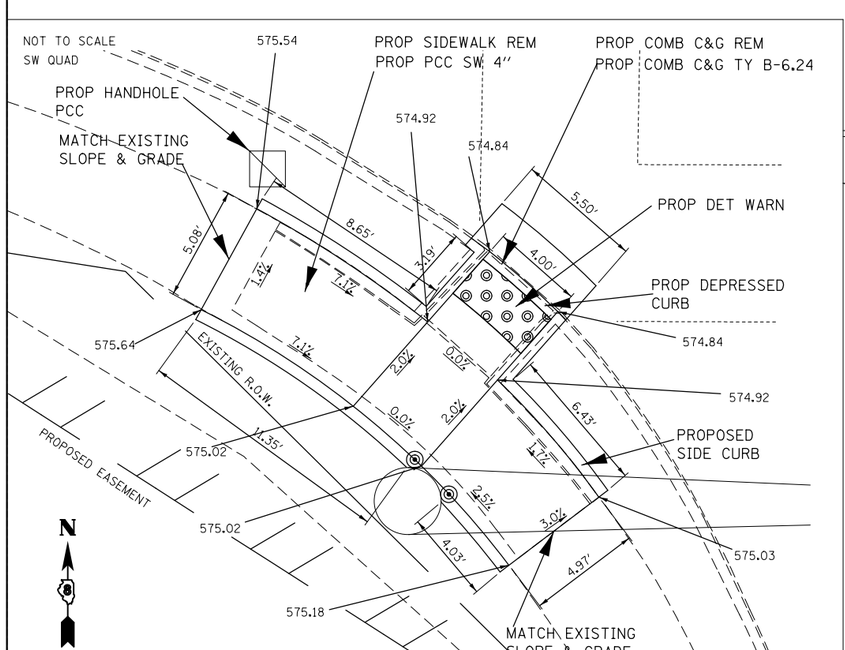

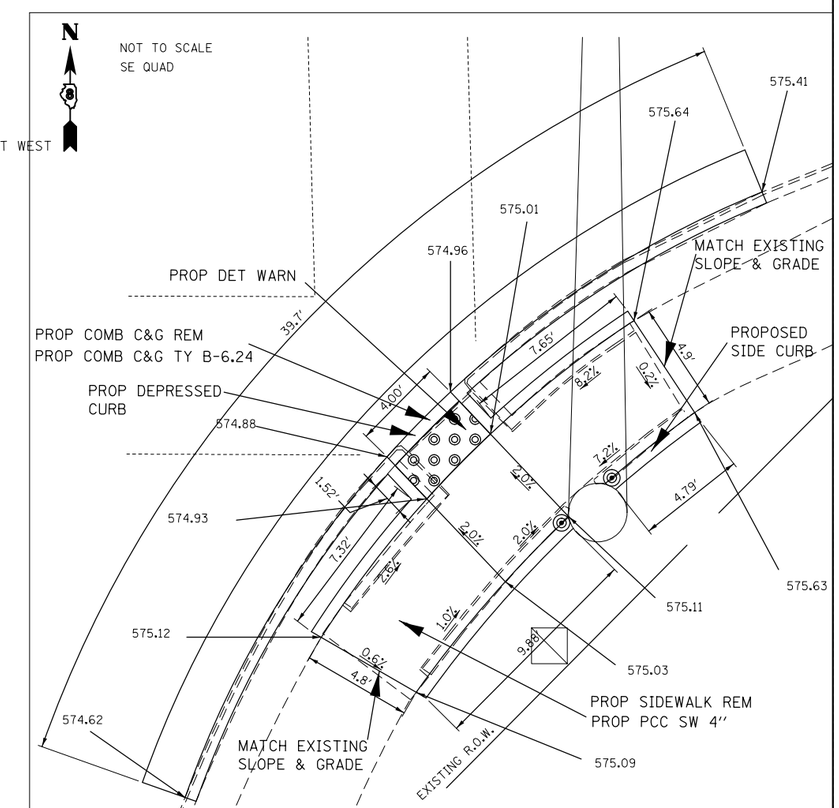

MATCH EXISTING
SLOPE & GRADE

FILE NAME = pw:\\IL084EBIDINTEG.illinois.gov:PWIDOT\Documents\IDOT Offices\District 8\Projects\D876J81\DRAWINGS\	USER NAME = downingch	DESIGNED - _____	REVISED - _____
		DRAWN - _____	REVISED - _____
$MODELNAME$	PLOT SCALE = 40.0649 ' / in.	CHECKED - _____	REVISED - _____
	PLOT DATE = 1/22/2018	DATE - _____	REVISED - _____

STATE OF ILLINOIS
DEPARTMENT OF TRANSPORTATION

PROPOSED NORTH BELT WEST
17TH STREET

SCALE: _____ SHEET ___ OF ___ SHEETS STA. _____ TO STA. _____

F.A.U. RTE.	SECTION	COUNTY	TOTAL SHEETS	SHEET NO.
9257	(28-1, 122-1, 122-2)SW-1	ST. CLAIR	25	15
		CONTRACT NO. 76J81		
		ILLINOIS FED. AID PROJECT		

TRAFFIC SIGNALS LEGEND

- EXISTING SIGNAL POST
- EXISTING SIGNAL POST WITH BACKPLATE
- EXISTING TRAFFIC SIGNAL MAST ARM
- EXISTING HANDHOLE
- EXISTING DOUBLE HANDHOLE
- EXISTING HEAVEY DUTY HANDHOLE
- EXISTING DETECTOR LOOP
- EXISTING CONTROLLER
- EXISTING STREET NAME SIGN/TRAFFIC SIGN
- EXISTING ILLUMINATED SIGN
- EXISTING SERVICE INSTALLATION
- EXISTING EMERGENCY VEHICLE SYSTEM DETECTOR (E.V.P.S.)
- EXISTING (E.V.P.S.) CONFIRMATION BEACON
- EXISTING SIGNAL HEAD, PEDESTRIAN
- EXISTING PEDESTRIAN PUSH-BUTTON
- EXISTING CONDUIT
- PROPOSED HANDHOLE
- PROPOSED HEAVEY DUTY HANDHOLE
- PROPOSED PEDESTRIAN PUSH-BUTTON
- PROPOSED SIGNAL POST/PUSH-BUTTON
- PROPOSED CONDUIT

ELECTRICAL GENERAL NOTES

1. AN APPROPRIATE TRAFFIC SIGNAL PUSH-BUTTON SIGN WILL BE MOUNTED ABOVE EACH PEDESTRIAN PUSH-BUTTON AND ALIGNED SO THAT THE ARROW ON THE SIGN CORRESPONDS TO THE ASSOCIATED STREET CROSSING, CROSSWALK AND PEDESTRIAN ACCESS ROUTE. THE SIGNS WILL BE FURNISHED AND INSTALLED BY THE CONTRACTOR AND INCLUDED IN THE COST OF "PEDESTRIAN PUSH-BUTTON" AND "PEDESTRIAN PUSH-BUTTON, SPECIAL".

2. THE CONTRACTOR SHALL VERIFY THE EXACT LOCATION OF ALL UNDERGROUND UTILITIES PRIOR TO BEGINNING CONSTRUCTION.

3. THE CONCRETE FOUNDATION FOR THE PEDESTRIAN PUSH-BUTTON POST SHALL BE INCLUDED IN THE COST OF THE "PEDESTRIAN PUSH-BUTTON POST, GALVANIZED STEEL, TYPE I".

4. ALL HANDHOLES SHALL BE CAST-IN-PLACE PORTLAND CEMENT CONCRETE (PER ARTICLE 814.03(a)). THE CAST IN PLACE LEGEND IN THE COVER SHALL BE "TRAFFIC SIGNALS". SLOPE HANDHOLE COVERS TO MATCH PROPOSED GRADE ELEVATIONS.

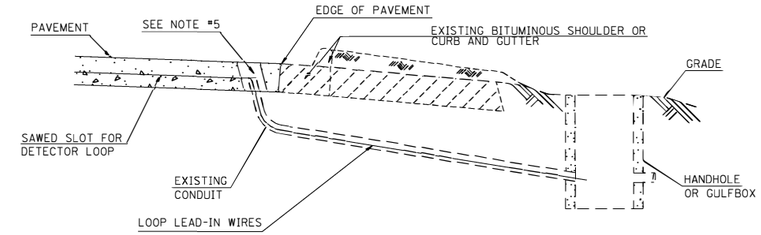

DETAIL A
(NO SCALE)

INSTALLING DETECTOR LOOP WIRES IN EXISTING CONDUIT

1. DRILL OUT PAVEMENT SEALANT AND CLEAN EXISTING CONDUIT.
2. REMOVE EXISTING DETECTOR LOOP WIRES TO HANDHOLE OR GULFBOX.
3. INSTALL NEW LOOP LEAD-IN WIRES IN EXISTING CONDUIT.
4. SPLICE NEW DETECTOR LOOP WIRES TO EXISTING LOOP LEAD-IN CABLE IN HANDHOLE OR GULFBOX.
5. FILL HOLE WITH APPROVED SEALER. PREVENT SEALER FROM ENTERING INTO CONDUIT.
6. LOCATING UNDERGROUND CABLE WILL BE PAID FOR SEPARATELY.

NOT A PAY ITEM. THE COST OF THIS WORK SHALL BE INCLUDED IN THE PAY ITEM "DETECTOR LOOP REPLACEMENT"

DETECTOR LOOP REPLACEMENT LEGEND

- EX. HANDHOLE
- EX. DETECTOR LOOP
- EX. TRAFFIC SIGNAL CONTROLLER
- EXISTING CONDUIT
- PROPOSED DETECTOR LOOP

NOTES:

SEE TABLE "DETECTOR LOOP REQUIREMENTS AND CALCULATIONS" FOR LOOP SIZE AND CALCULATED NUMBER OF TURNS.
SEE "DETAIL A" FOR INSTALLING DETECTOR LOOP WIRES IN EXISTING CONDUITS.

SCHEDULE OF QUANTITIES

	CODE NO.	ITEM	UNIT	QTY.	FSP	47th St.	W Main St.	42nd St.	Royal Heights	Cantebury/ Buckingham	17th St.
	70102637	TRAFFIC CONTROL AND PROTECTION, STANDARD 701701	EACH	7	1	1	1	1	1	1	1
	70102642	TRAFFIC CONTROL AND PROTECTION, STANDARD 701801	EACH	7	1	1	1	1	1	1	1
	80300100	LOCATING UNDERGROUND CABLE	FOOT	77	5	12	46	0	11	3	0
	81028340	UNDERGROUND CONDUIT, PVC, 1 1/2" DIA.	FOOT	57	5	12	26	0	11	3	0
	81400700	HANDHOLE, PORTLAND CEMENT CONCRETE	EACH	13	0	2	3	2	2	2	2
	81400710	HEAVY-DUTY HANDHOLE, PORTLAND CEMENT CONCRETE	EACH	1	0	0	1	0	0	0	0
	81400720	DOUBLE HANDHOLE, PORTLAND CEMENT CONCRETE	EACH	2	0	0	1	0	1	0	0
	87501215	ELECTRIC CABLE IN CONDUIT, SIGNAL NO. 14 2C	FOOT	2513	428	0	987	364	734	0	0
	87601100	PEDESTRIAN PUSH-BUTTON POST, GALVANIZED STEEL, TYPE I	EACH	7	1	2	2	0	1	1	0
	87900200	DRILL EXISTING HANDHOLE	EACH	7	1	2	2	0	1	1	0
	88600600	DETECTOR LOOP REPLACEMENT	FOOT	1084	0	0	1084	0	0	0	0
	88800100	PEDESTRIAN PUSH-BUTTON	EACH	38	6	4	5	4	3	8	8
	89500200	RELOCATE EXISTING PEDESTRIAN SIGNAL HEAD	EACH	2	0	0	2	0	0	0	0
	89500400	RELOCATE EXISTING PEDESTRIAN PUSH-BUTTON	EACH	4	0	0	3	0	1	0	0
	89502200	MODIFY EXISTING CONTROLLER	EACH	7	1	1	1	1	1	1	1
	89502300	REMOVE ELECTRIC CABLE FROM CONDUIT	FOOT	2472	421	0	971	358	722	0	0
	89502350	REMOVE AND REINSTALL ELECTRIC CABLE FROM CONDUIT	FOOT	6209	949	871	617	674	505	1070	1523
*	89502375	REMOVE EXISTING TRAFFIC SIGNAL EQUIPMENT	EACH	54	8	4	9	8	9	8	8
	89502380	REMOVE EXISTING HANDHOLE	EACH	14	0	2	4	2	2	2	2
*	X8800101	PEDESTRIAN PUSH-BUTTON, SPECIAL	EACH	10	2	0	0	4	4	0	0

* REQUIRES SPECIAL PROVISION

MODEL: Default
FILE NAME: pw:\\IL084EBIDINTEG.illinois.gov:PWIDOT\Documents\IDOT Offices\District 8\Projects\D876181\CADData\CADsheets\D876181-sht-ts.dgn

USER NAME = boboja	DESIGNED -	REVISED -
	DRAWN -	REVISED -
PLOT SCALE = 40.0000 ' / in.	CHECKED -	REVISED -
PLOT DATE = 10/5/2018	DATE -	REVISED -

STATE OF ILLINOIS
DEPARTMENT OF TRANSPORTATION

ADA PEDESTRIAN PUSH-BUTTON REPLACEMENT
LEGEND, NOTES, DETAILS AND SCHEDULE OF QUANTITIES

SCALE: SHEET OF SHEETS STA. TO STA.

F.A.U. RTE.	SECTION	COUNTY	TOTAL SHEETS	SHEET NO.
9257	(28-1, 122-1, 122-2)SW-1	ST. CLAIR	25	16

CONTRACT NO. 76J81

ILLINOIS FED. AID PROJECT

NOTES:
1. REMOVE EXISTING TRAFFIC SIGNAL EQUIPMENT (1-PEDESTRIAN PUSH-BUTTON & 1-PEDESTRIAN PUSH-BUTTON SIGN).

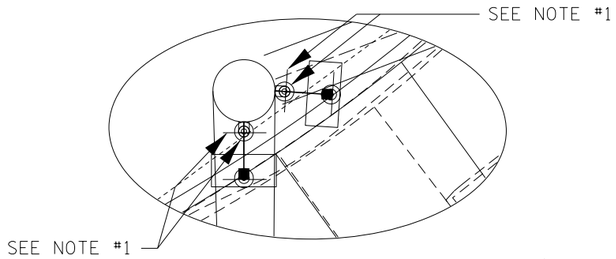

DETAIL A

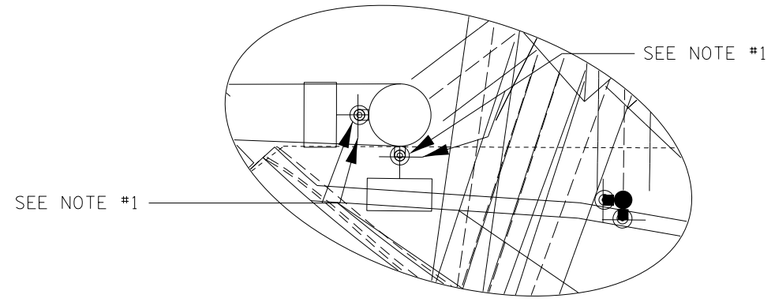

DETAIL C

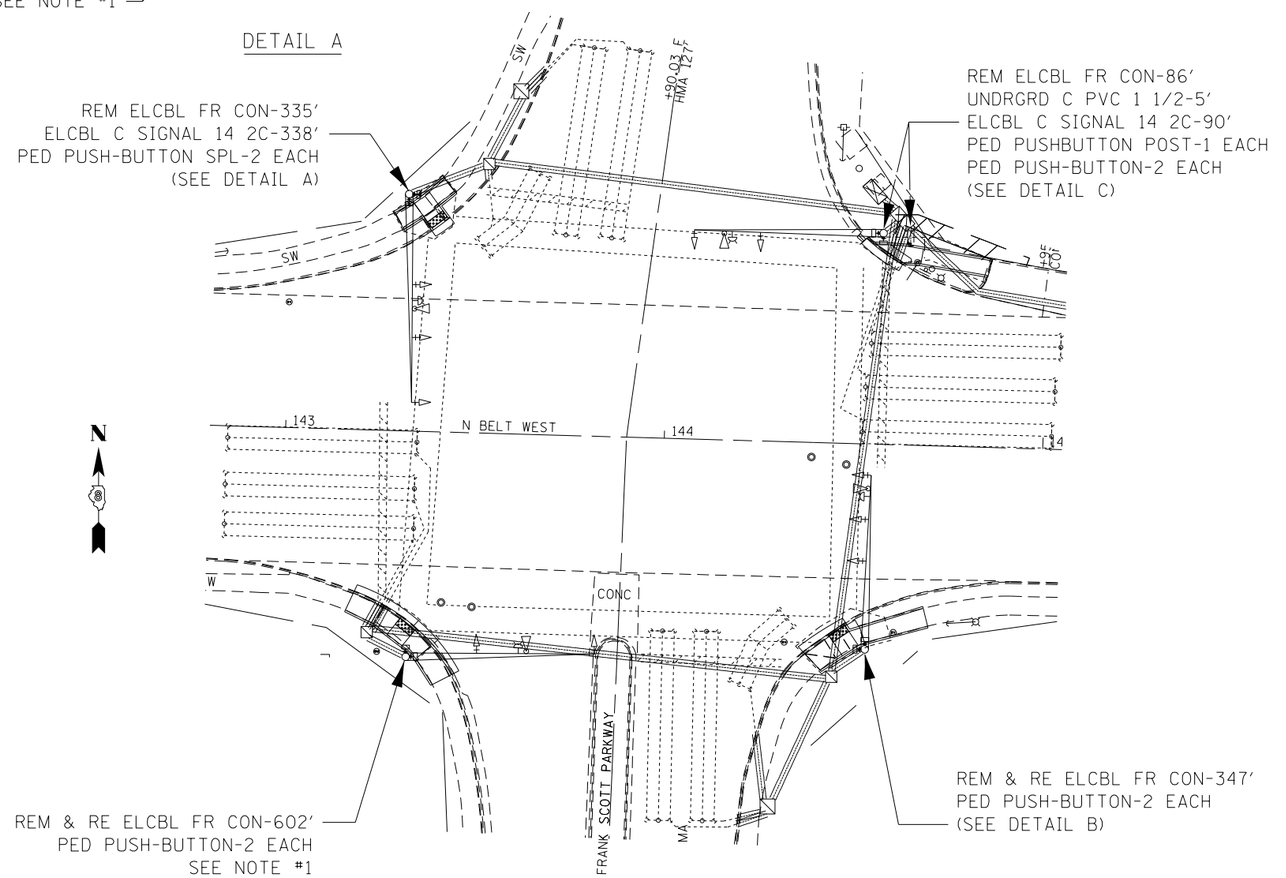

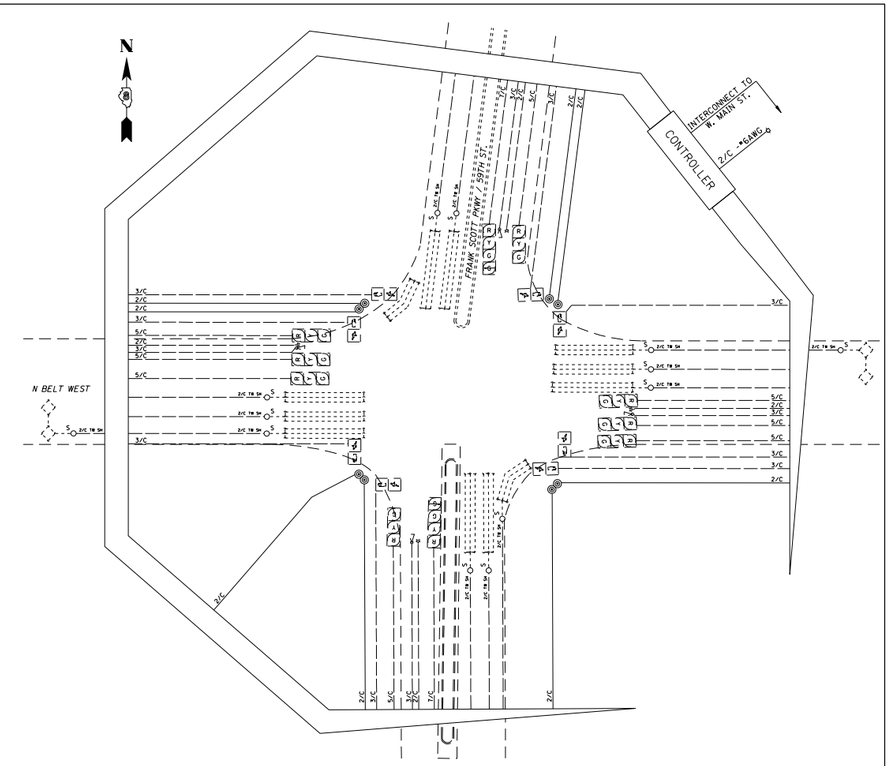

CABLE DIAGRAM LEGEND

———	PROPOSED ELECTRIC CABLE IN CONDUIT
— — —	EXISTING ELECTRIC CABLE IN CONDUIT
—○S—	EXISTING CABLE SPLICE
2/C	INDICATES NUMBER OF CONDUCTORS IN CABLE
TW SH	TWISTED AND SHIELDED CABLE
#6	INDICATES AMERICAN WIRE GAUGE (AWG) SIZE 6 CONDUCTOR
-□-	EXISTING SERVICE INSTALLATION

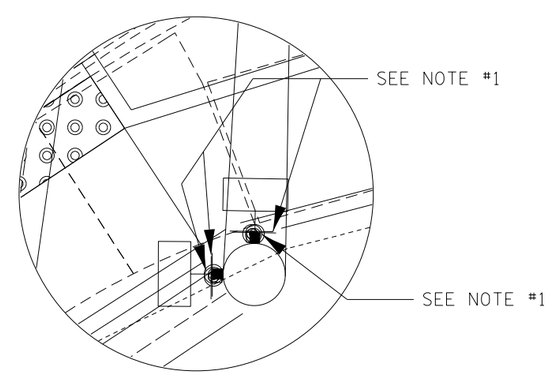

DETAIL B

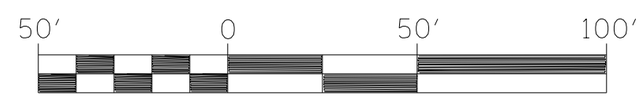

SCALE: 1" = 50'

MODEL: Default
FILE NAME: pw:\\IL084EBIDINTEG.illinois.gov:PWIDOT\Documents\IDOT Offices\District 8\Projects\D876J81\CADData\CADsheets\D876J81-sht-4s.dgn

USER NAME = boboja	DESIGNED -	REVISED -	
	DRAWN -	REVISED -	
PLOT SCALE = 40.0000 ' / in.	CHECKED -	REVISED -	
PLOT DATE = 10/5/2018	DATE -	REVISED -	

STATE OF ILLINOIS
DEPARTMENT OF TRANSPORTATION

ADA PEDESTRIAN PUSH-BUTTON REPLACEMENT PLAN
N BELT WEST & FRANK SCOTT PKWY

SCALE: | SHEET OF SHEETS | STA. TO STA.

F.A.U. RTE.	SECTION	COUNTY	TOTAL SHEETS	SHEET NO.
9257	(28-1, 122-1, 122-2)SW-1	ST. CLAIR	25	17
		CONTRACT NO. 76J81		
	ILLINOIS	FED. AID PROJECT		

NOTES:
1. REMOVE EXISTING TRAFFIC SIGNAL EQUIPMENT (1-PEDESTRIAN PUSH-BUTTON & 1-PEDESTRIAN PUSH-BUTTON SIGN).

2. REMOVE EXISTING HANDHOLE TO BE ADJUSTED IN THE PEDESTRIAN ACCESS ROUTE).

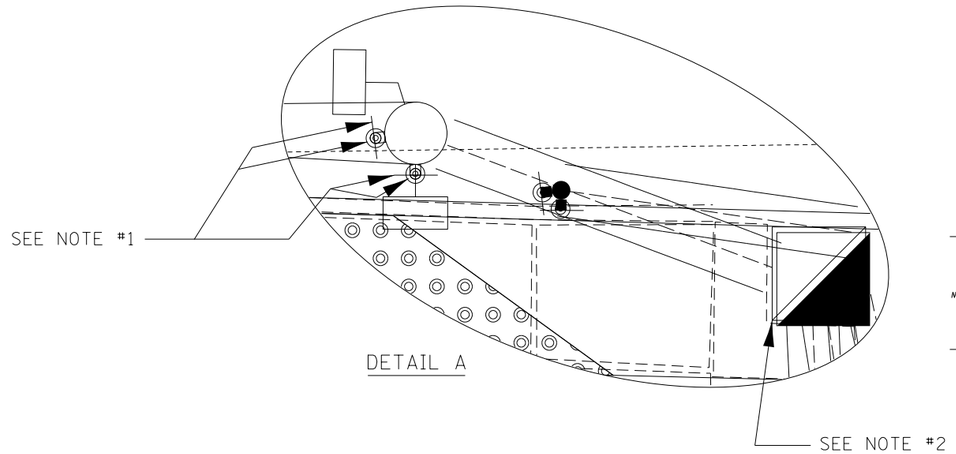

DETAIL A

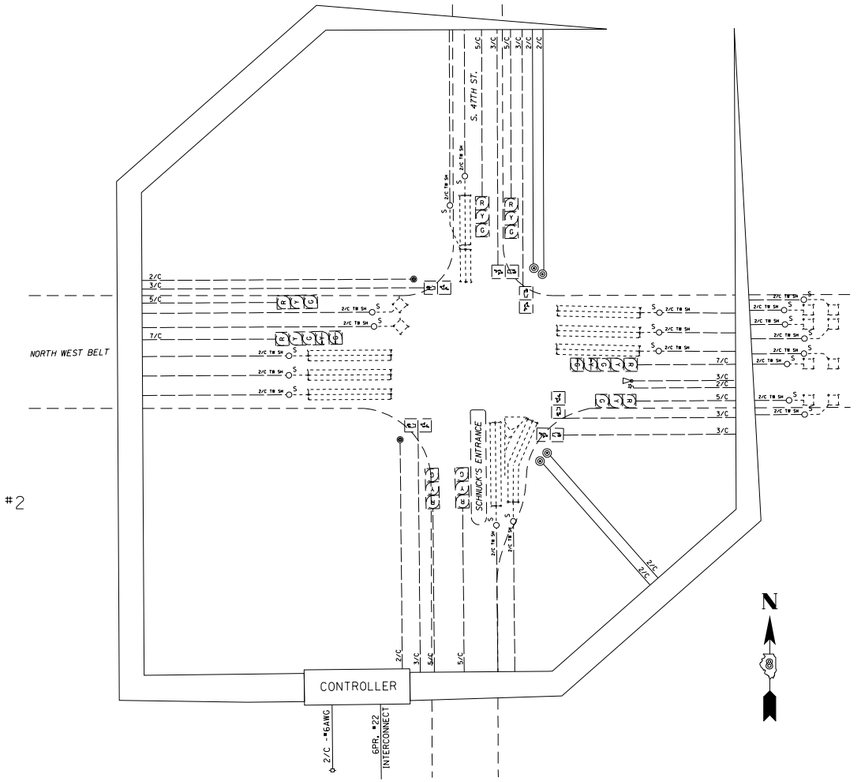

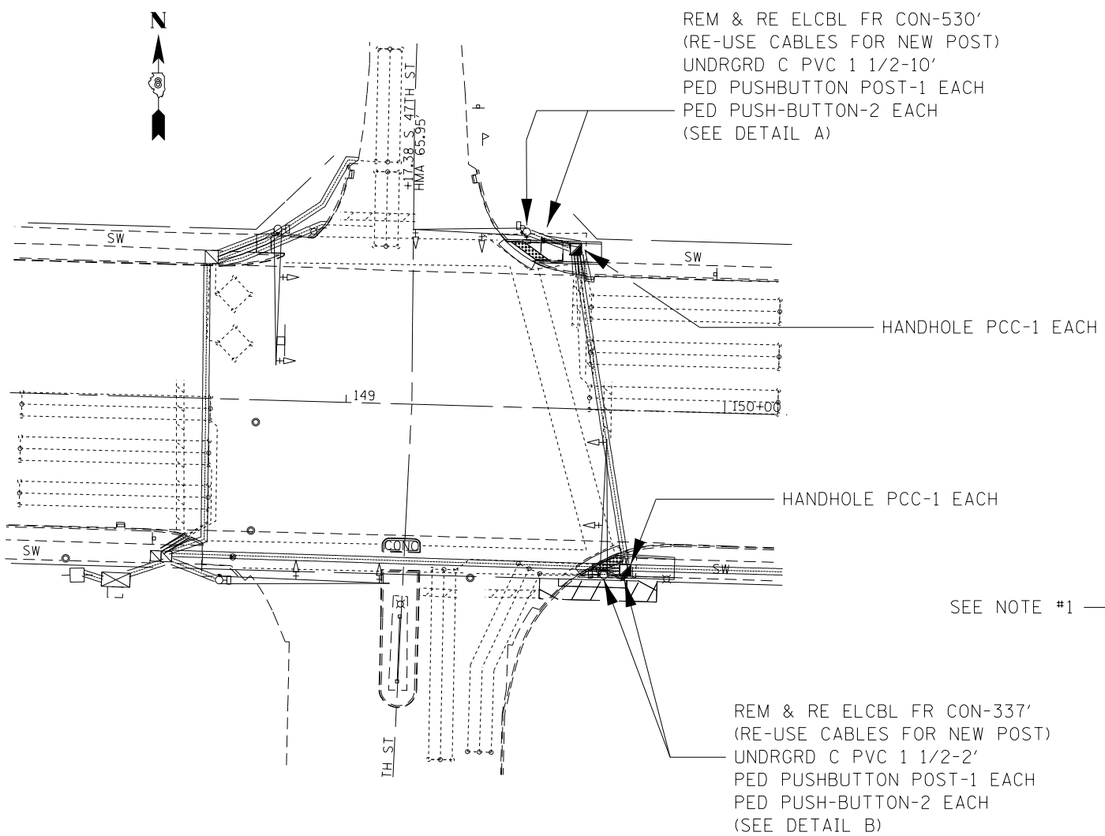

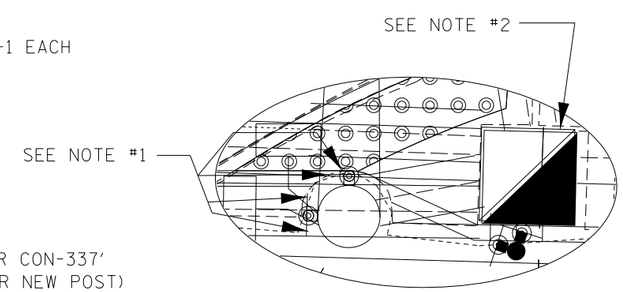

DETAIL B

CABLE DIAGRAM LEGEND

———	PROPOSED ELECTRIC CABLE IN CONDUIT
— — —	EXISTING ELECTRIC CABLE IN CONDUIT
—○S—	EXISTING CABLE SPLICE
2/C	INDICATES NUMBER OF CONDUCTORS IN CABLE
TW SH	TWISTED AND SHIELDED CABLE
#6	INDICATES AMERICAN WIRE GAUGE (AWG) SIZE 6 CONDUCTOR
—□—	EXISTING SERVICE INSTALLATION

50' 0 50' 100'

SCALE: 1'' = 50'

MODEL: Default
FILE NAME: pw:\\IL084EBIDINTEG.illinois.gov:PW\IDOT\Documents\IDOT Offices\District 8\Projects\D876J81\CADData\CADsheets\D876J81-sht-15.dgn

USER NAME = boboja	DESIGNED -	REVISED -	
	DRAWN -	REVISED -	
PLOT SCALE = 40.0000 ' / in.	CHECKED -	REVISED -	
PLOT DATE = 10/5/2018	DATE -	REVISED -	

STATE OF ILLINOIS
DEPARTMENT OF TRANSPORTATION

ADA PEDESTRIAN PUSH-BUTTON REPLACEMENT PLAN
N BELT WEST & 47TH ST

SCALE: | SHEET OF SHEETS | STA. TO STA.

F.A.U. RTE.	SECTION	COUNTY	TOTAL SHEETS	SHEET NO.
9257	(28-1, 122-1, 122-2)SW-1	ST. CLAIR	25	18
		CONTRACT NO. 76J81		
		ILLINOIS FED. AID PROJECT		

NOTES:
1. REMOVE EXISTING TRAFFIC SIGNAL EQUIPMENT (1-PEDESTRIAN PUSH-BUTTON & 1-PEDESTRIAN PUSH-BUTTON SIGN).

2. REMOVE EXISTING HANDHOLE TO BE ADJUSTED (IN THE PEDESTRIAN ACCESS ROUTE).

SEE CABLE DIAGRAM ON SHEET 2 OF 2

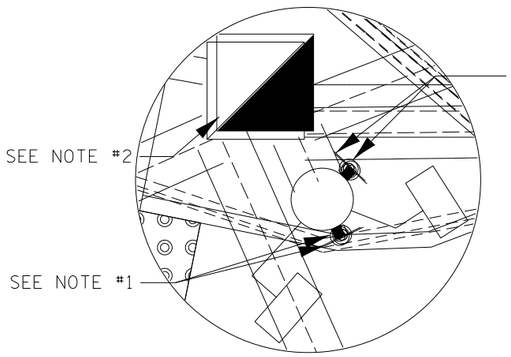

DETAIL A

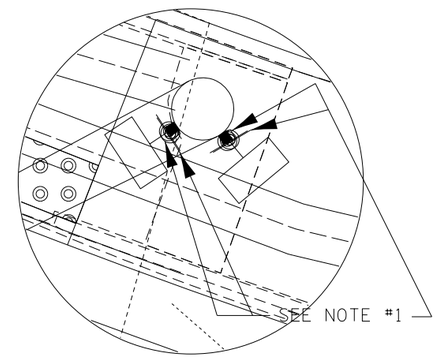

DETAIL D

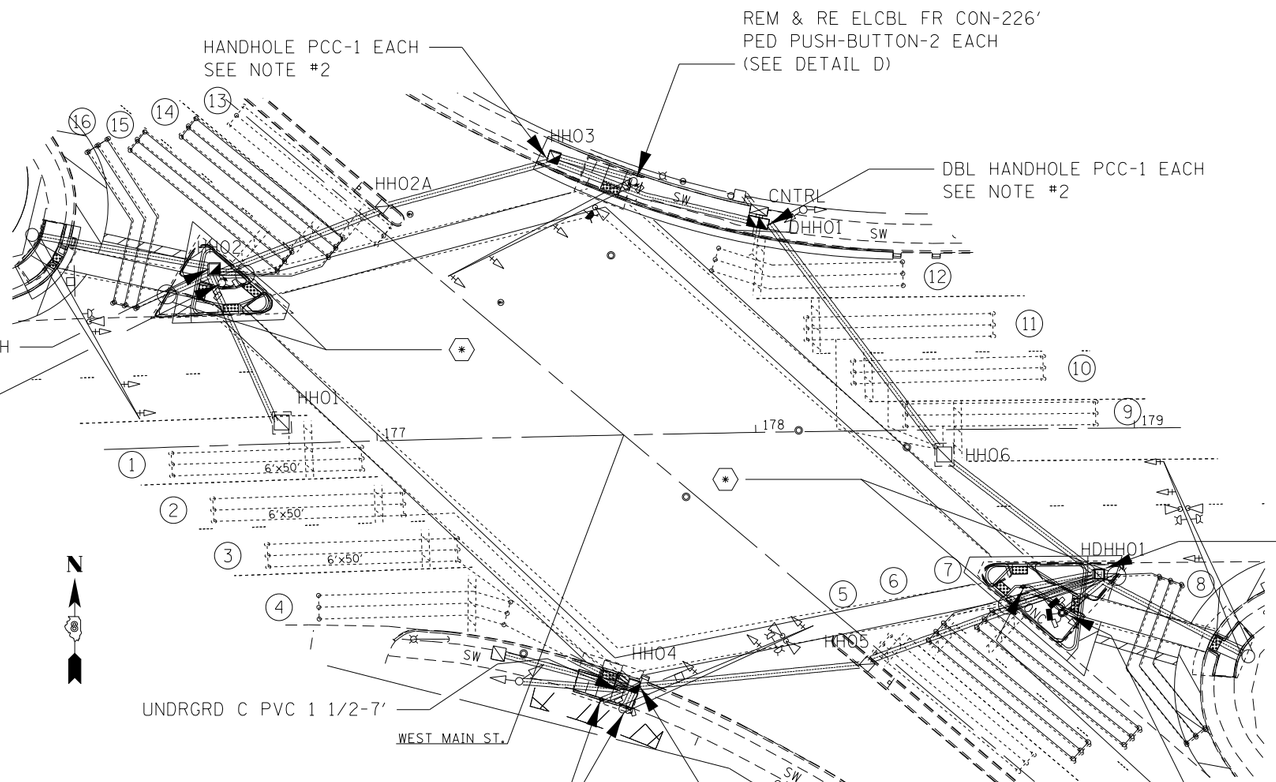

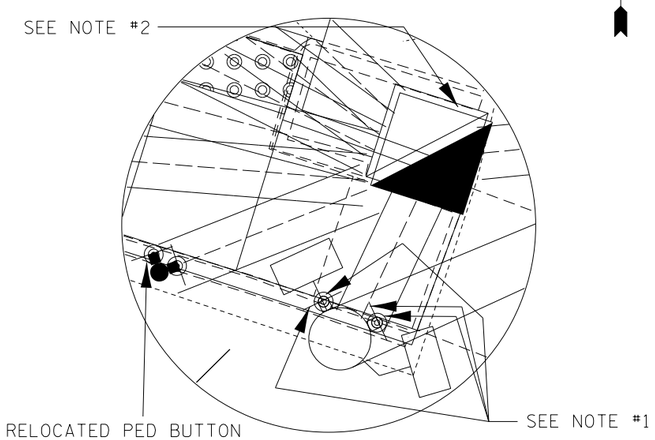

DETAIL B

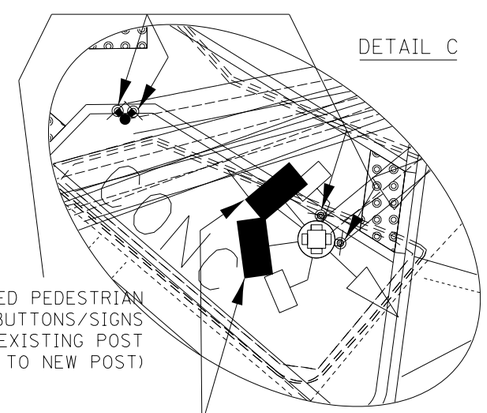

DETAIL C

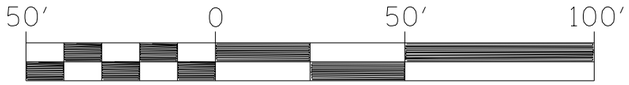

SCALE: 1'' = 50'

USER NAME = boboja	DESIGNED -	REVISED -	STATE OF ILLINOIS DEPARTMENT OF TRANSPORTATION	ADA PEDESTRIAN PUSH-BUTTON /DETECTOR LOOP REPLACEMENT PLAN N BELT WEST & W MAIN ST (1 OF 2)	F.A.U. RTE.	SECTION	COUNTY	TOTAL SHEETS / SHEET NO.
	DRAWN -	REVISED -			9257	(28-1, 122-1, 122-2)SW-1	ST. CLAIR	25 / 19
PLOT SCALE = 40.0000 ' / in.	CHECKED -	REVISED -					CONTRACT NO. 76J81	
PLOT DATE = 10/5/2018	DATE -	REVISED -		SCALE: SHEET OF SHEETS STA. TO STA.		ILLINOIS FED. AID PROJECT		

MODEL: Default
FILE NAME: pw:\\IL084EBIDINTEG.illinois.gov:PWIDOT\Documents\IDOT Offices\District 8\Projects\D876J81\CADData\CADsheets\D876J81-sht-ts.dgn

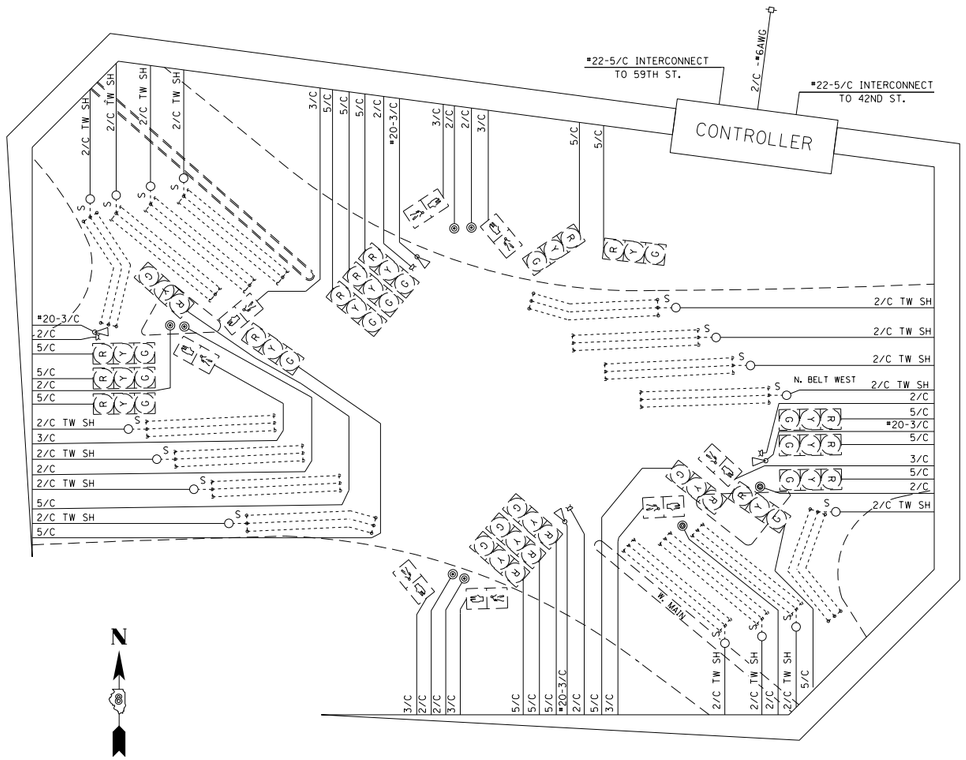

DETECTOR LOOP REQUIREMENTS AND CALCULATIONS

LOOP#	PHASE # (Φ)	LOOP SIZE (FT. X FT.)	REQUIRED # OF TURNS	CALCULATED INDUCTANCE MICROHENRIES (μH)	CALCULATED RESISTANCE OHMS (Ω)
1. EBLT CD	7	6′ × 50′(Q)	3-6-3	787	1.6
2. EB THRU CD	4	6′ × 50′(Q)	3-6-3	802	2.0
3. EB THRU CD	4	6′ × 50′(Q)	3-6-3	797	1.8
4. EBRT CD	6	6′ × 50′(Q)	3-6-3	790	1.7
5. NBLT CD	1	6′ × 50′(Q)	3-6-3	786	1.6
6. NB THRU CD	6	6′ × 50′(Q)	3-6-3	790	1.7
7. NB THRU CD	6	6′ × 50′(Q)	3-6-3	787	1.6
8. NB THRU CD	3	6′ × 50′(Q)	3-6-3	789	1.7
9. WBLT CD	8	6′ × 50′(Q)	3-6-3	787	1.6
10. WB THRU CD	8	6′ × 50′(Q)	3-6-3	792	1.7
11. WB THRU CD	2	6′ × 50′(Q)	3-6-3	797	1.8
12. WBRT CD	2	6′ × 50′(Q)	3-6-3	787	1.6
13. SBLT CD	5	6′ × 50′(Q)	3-6-3	786	1.6
14. SB THRU CD	2	6′ × 50′(Q)	3-6-3	791	1.7
15. SB THRU CD	2	6′ × 50′(Q)	3-6-3	788	1.6
16. SBRT CD	2	6′ × 50′(Q)	3-6-3	788	1.6

THE ABOVE VALUES ARE CALCULATED OF COMBINED LOOP AND LEAD-IN INDUCTANCE AND RESISTANCE. ACTUAL MEASURED VALUES SHOULD BE WITHIN +/- 20% OF THESE VALUES.

Q=QUADRAPOLE

(*) =SEE DETAIL ''A''

CABLE DIAGRAM LEGEND

———	PROPOSED ELECTRIC CABLE IN CONDUIT
— — —	EXISTING ELECTRIC CABLE IN CONDUIT
—S—○—	EXISTING CABLE SPLICE
2/C	INDICATES NUMBER OF CONDUCTORS IN CABLE
TW SH	TWISTED AND SHIELDED CABLE
#6	INDICATES AMERICAN WIRE GAUGE (AWG) SIZE 6 CONDUCTOR
—□—	EXISTING SERVICE INSTALLATION

50′ 0 50′ 100′

SCALE: 1'' = 50′

MODEL: Default
FILE NAME: pw:\\IL084EBID3NTEG.illinois.gov:PWIDOT\Documents\IDOT Offices\District 8\Projects\D876181\CADData\CADsheets\D876181-sht-ts.dgn

USER NAME = boboja	DESIGNED -	REVISED -	
	DRAWN -	REVISED -	
PLOT SCALE = 40.0000 ' / in.	CHECKED -	REVISED -	
PLOT DATE = 10/5/2018	DATE -	REVISED -	

STATE OF ILLINOIS
DEPARTMENT OF TRANSPORTATION

ADA PEDESTRIAN PUSH-BUTTON /DETECTOR LOOP REPLACEMENT PLAN
N BELT WEST & W MAIN ST (2 OF 2)

SCALE: SHEET OF SHEETS STA. TO STA.

F.A.U. RTE.	SECTION	COUNTY	TOTAL SHEETS	SHEET NO.
9257	(28-1, 122-1, 122-2)SW-1	ST. CLAIR	25	20

CONTRACT NO. 76J81

ILLINOIS FED. AID PROJECT

NOTES:
1. REMOVE EXISTING TRAFFIC SIGNAL EQUIPMENT (1-PEDESTRIAN PUSH-BUTTON & 1-PEDESTRIAN PUSH-BUTTON SIGN).

2. REMOVE EXISTING HANDHOLE TO BE ADJUSTED (IN THE PEDESTRIAN ACCESS ROUTE).

DETAIL A

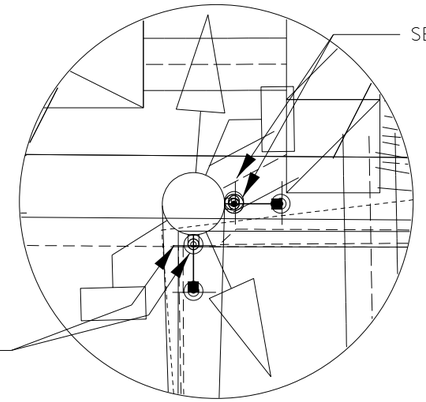

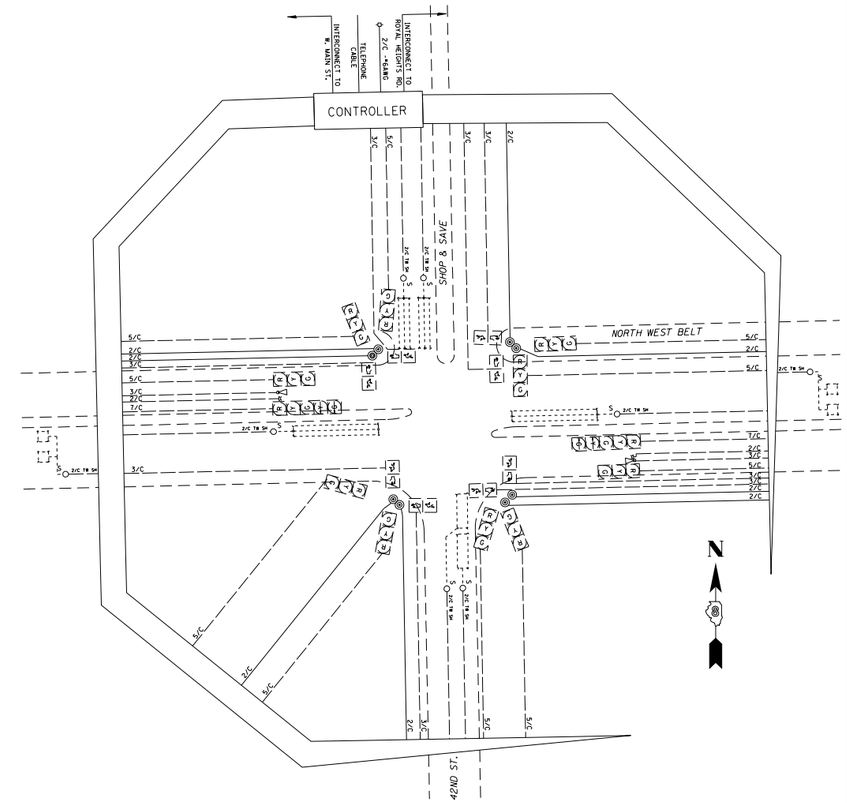

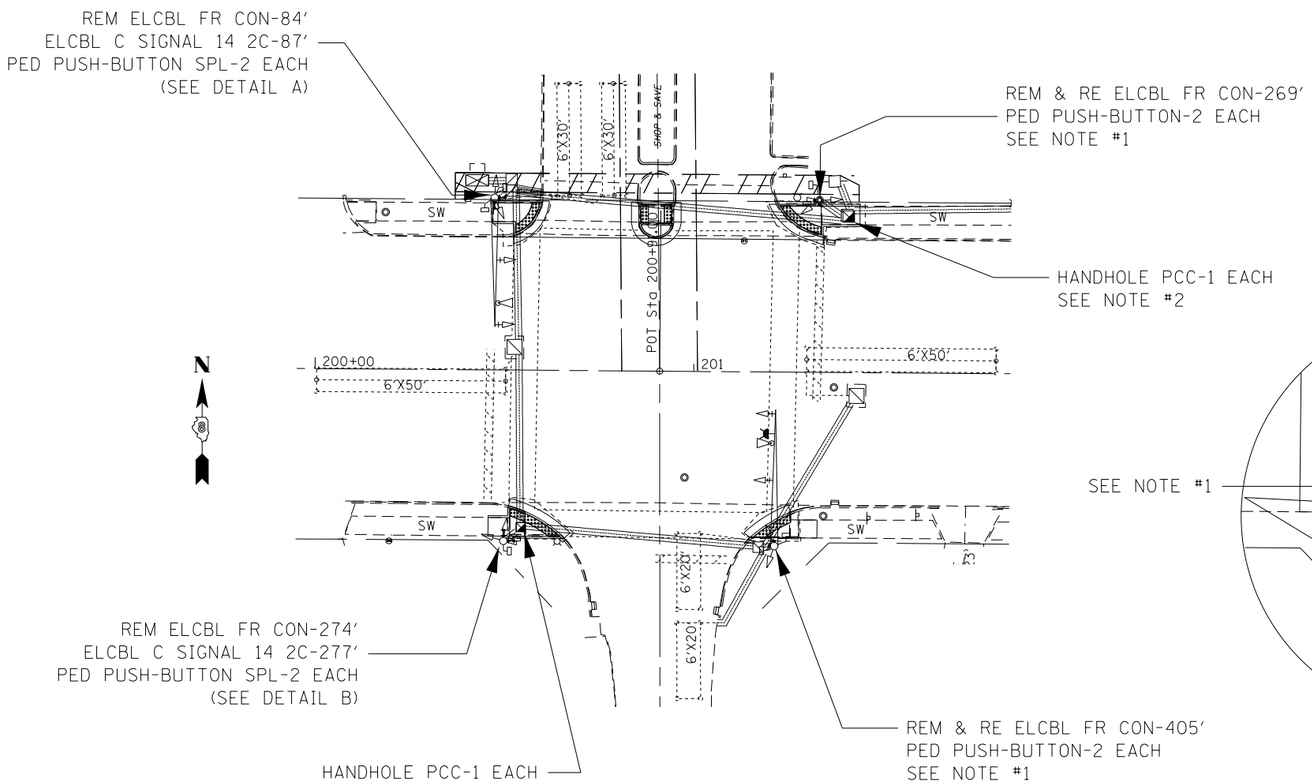

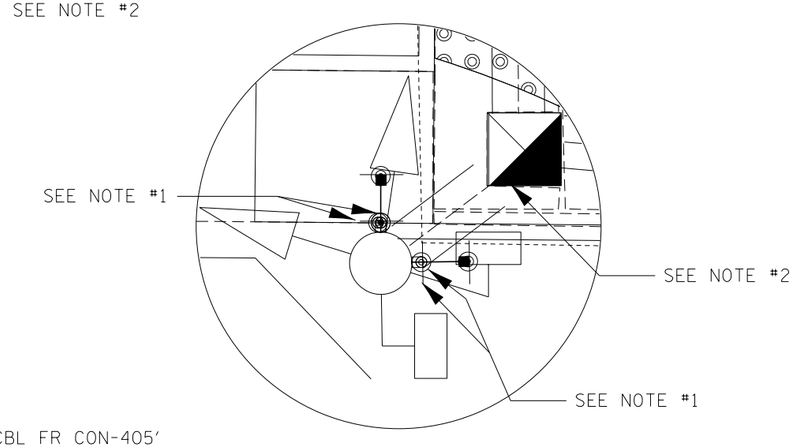

DETAIL B

CABLE DIAGRAM LEGEND

———	PROPOSED ELECTRIC CABLE IN CONDUIT
— —	EXISTING ELECTRIC CABLE IN CONDUIT
—○S—	EXISTING CABLE SPLICE
2/C	INDICATES NUMBER OF CONDUCTORS IN CABLE
TW SH	TWISTED AND SHIELDED CABLE
#6	INDICATES AMERICAN WIRE GAUGE (AWG) SIZE 6 CONDUCTOR
-□-	EXISTING SERVICE INSTALLATION

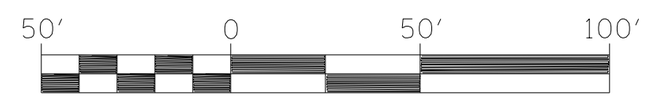

SCALE: 1" = 50'

MODEL: Default
FILE NAME: pw:\\IL084EBIDINTEG.illinois.gov:PWIDOT\Documents\IDOT Offices\District 8\Projects\D876J81\CADData\CADsheets\D876J81-sht-1s.dgn

USER NAME = boboja	DESIGNED -	REVISED -	
	DRAWN -	REVISED -	
PLOT SCALE = 40.0000 ' / in.	CHECKED -	REVISED -	
PLOT DATE = 10/5/2018	DATE -	REVISED -	

STATE OF ILLINOIS
DEPARTMENT OF TRANSPORTATION

ADA PEDESTRIAN PUSH-BUTTON REPLACEMENT PLAN
N BELT WEST & 42ND ST

SCALE: | SHEET OF SHEETS | STA. TO STA.

F.A.U. RTE.	SECTION	COUNTY	TOTAL SHEETS	SHEET NO.
9257	(28-1, 122-1, 122-2)SW-1	ST. CLAIR	25	21
		CONTRACT NO. 76J81		
		ILLINOIS	FED. AID PROJECT	

NOTES:
1. REMOVE EXISTING TRAFFIC SIGNAL EQUIPMENT (1-PEDESTRIAN PUSH-BUTTON & 1-PEDESTRIAN PUSH-BUTTON SIGN).

2. REMOVE EXISTING HANDHOLE TO BE ADJUSTED (IN THE PEDESTRIAN ACCESS ROUTE).

DETAIL A

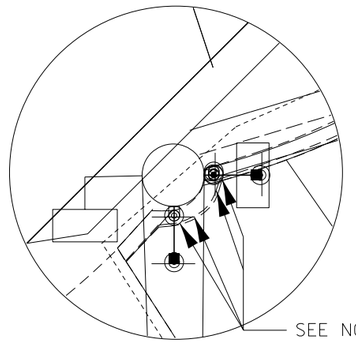

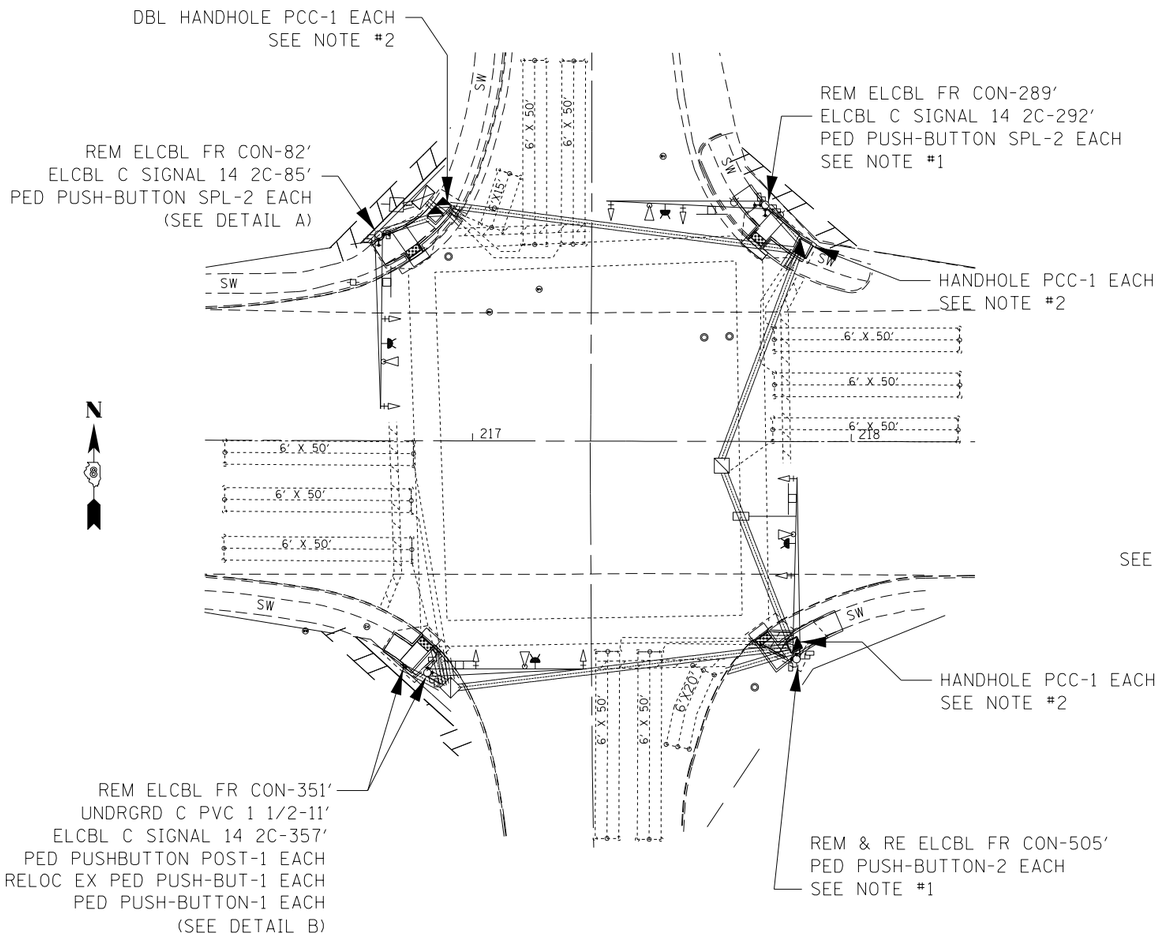

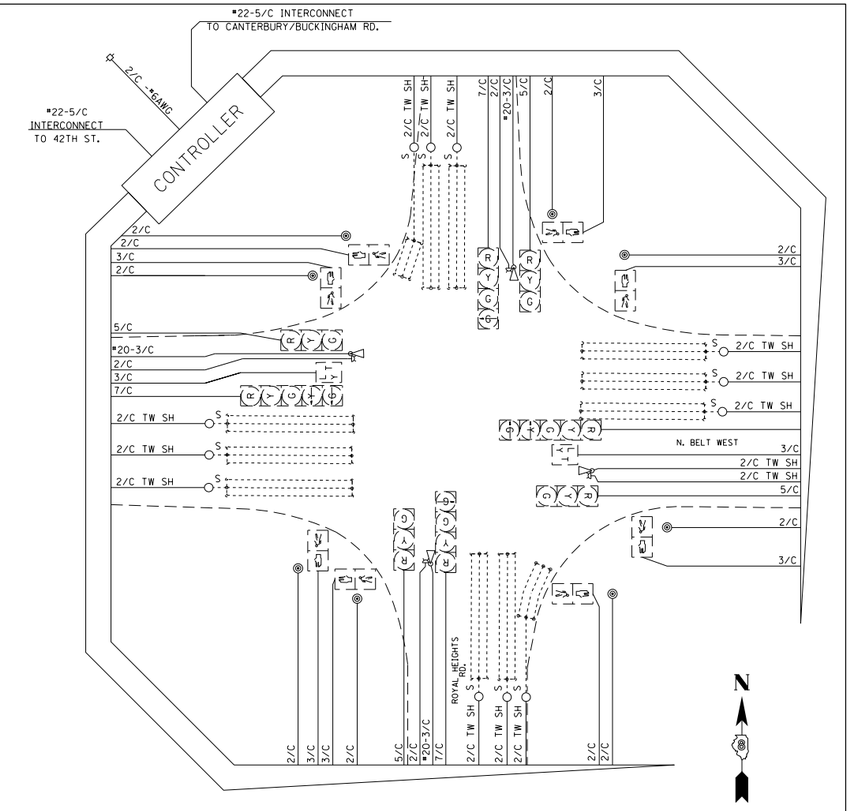

DETAIL B

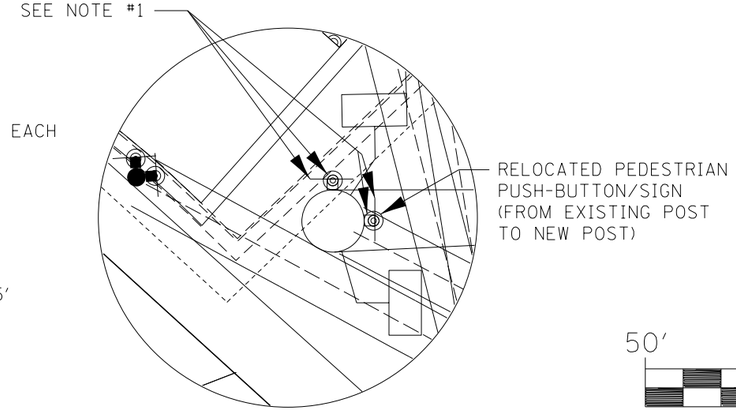

CABLE DIAGRAM LEGEND

———	PROPOSED ELECTRIC CABLE IN CONDUIT
— —	EXISTING ELECTRIC CABLE IN CONDUIT
—○S—	EXISTING CABLE SPLICE
2/C	INDICATES NUMBER OF CONDUCTORS IN CABLE
TW SH	TWISTED AND SHIELDED CABLE
#6	INDICATES AMERICAN WIRE GAUGE (AWG) SIZE 6 CONDUCTOR
-□-	EXISTING SERVICE INSTALLATION

50' 0 50' 100'

SCALE: 1'' = 50'

MODEL: Default
FILE NAME: pw:\\IL084EBIDINTEG.illinois.gov:PWIDOT\Documents\IDOT Offices\District 8\Projects\D876J81\CADData\CADsheets\D876J81-sht-ts.dgn

USER NAME = boboja	DESIGNED -	REVISED -	
	DRAWN -	REVISED -	
PLOT SCALE = 40.0000 ' / in.	CHECKED -	REVISED -	
PLOT DATE = 10/5/2018	DATE -	REVISED -	

STATE OF ILLINOIS
DEPARTMENT OF TRANSPORTATION

ADA PEDESTRIAN PUSH-BUTTON REPLACEMENT PLAN
N BELT WEST & ROYAL HEIGHTS RD

SCALE: | SHEET OF SHEETS | STA. TO STA.

F.A.U. RTE.	SECTION	COUNTY	TOTAL SHEETS	SHEET NO.
9257	(28-1, 122-1, 122-2)SW-1	ST. CLAIR	25	22
		CONTRACT NO. 76J81		
		ILLINOIS FED. AID PROJECT		

NOTES:
1. REMOVE EXISTING TRAFFIC SIGNAL EQUIPMENT (1-PEDESTRIAN PUSH-BUTTON & 1-PEDESTRIAN PUSH-BUTTON SIGN).

2. REMOVE EXISTING HANDHOLE TO BE ADJUSTED (IN THE PEDESTRIAN ACCESS ROUTE).

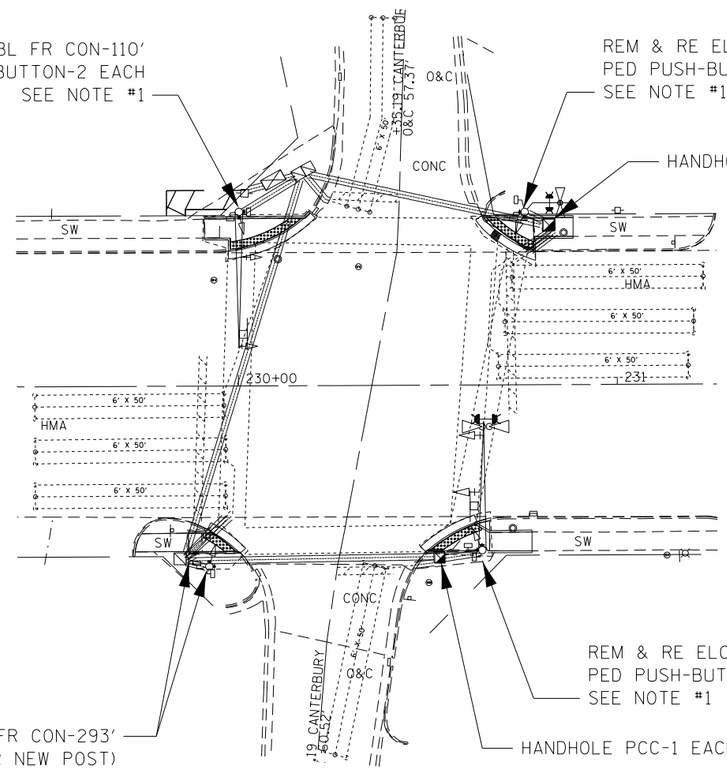

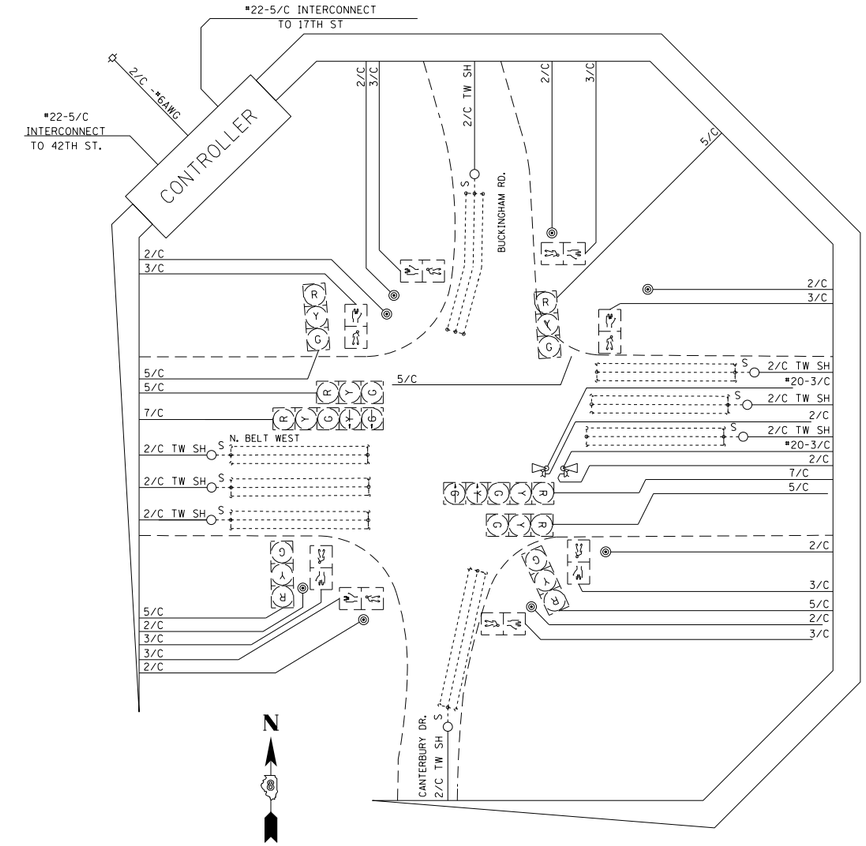

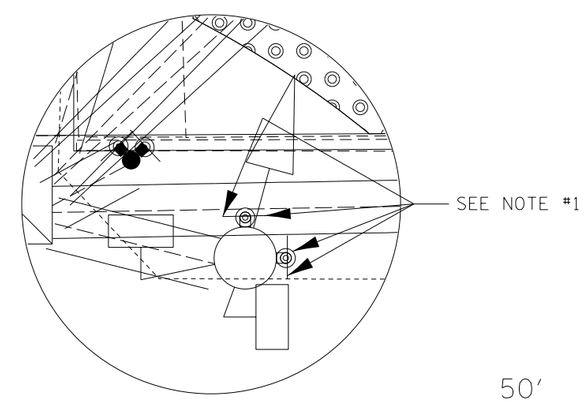

DETAIL A

CABLE DIAGRAM LEGEND

———	PROPOSED ELECTRIC CABLE IN CONDUIT
— —	EXISTING ELECTRIC CABLE IN CONDUIT
—○S—	EXISTING CABLE SPLICE
2/C	INDICATES NUMBER OF CONDUCTORS IN CABLE
TW SH	TWISTED AND SHIELDED CABLE
#6	INDICATES AMERICAN WIRE GAUGE (AWG) SIZE 6 CONDUCTOR
-□-	EXISTING SERVICE INSTALLATION

50' 0 50' 100'

SCALE: 1'' = 50'

MODEL: Default
FILE NAME: pw:\\IL084EBIDINTEG.illinois.gov:PWIDOT\Documents\IDOT Offices\District 8\Projects\D876J81\CADData\CADsheets\D876J81-sht-ts.dgn

USER NAME = boboja	DESIGNED -	REVISED -	
	DRAWN -	REVISED -	
PLOT SCALE = 40.0000 ' / in.	CHECKED -	REVISED -	
PLOT DATE = 10/5/2018	DATE -	REVISED -	

STATE OF ILLINOIS
DEPARTMENT OF TRANSPORTATION

ADA PEDESTRIAN PUSH-BUTTON REPLACEMENT PLAN
N BELT WEST & CANTERBURY DR /BUCKINGHAM RD

SCALE: | SHEET OF SHEETS | STA. TO STA.

F.A.U. RTE.	SECTION	COUNTY	TOTAL SHEETS	SHEET NO.
9257	(28-1, 122-1, 122-2)SW-1	ST. CLAIR	25	23

CONTRACT NO. 76J81

ILLINOIS | FED. AID PROJECT

NOTES:
1. REMOVE EXISTING TRAFFIC SIGNAL EQUIPMENT (1-PEDESTRIAN PUSH-BUTTON & 1-PEDESTRIAN PUSH-BUTTON SIGN).

2. REMOVE EXISTING HANDHOLE TO BE ADJUSTED (IN THE PEDESTRIAN ACCESS ROUTE).

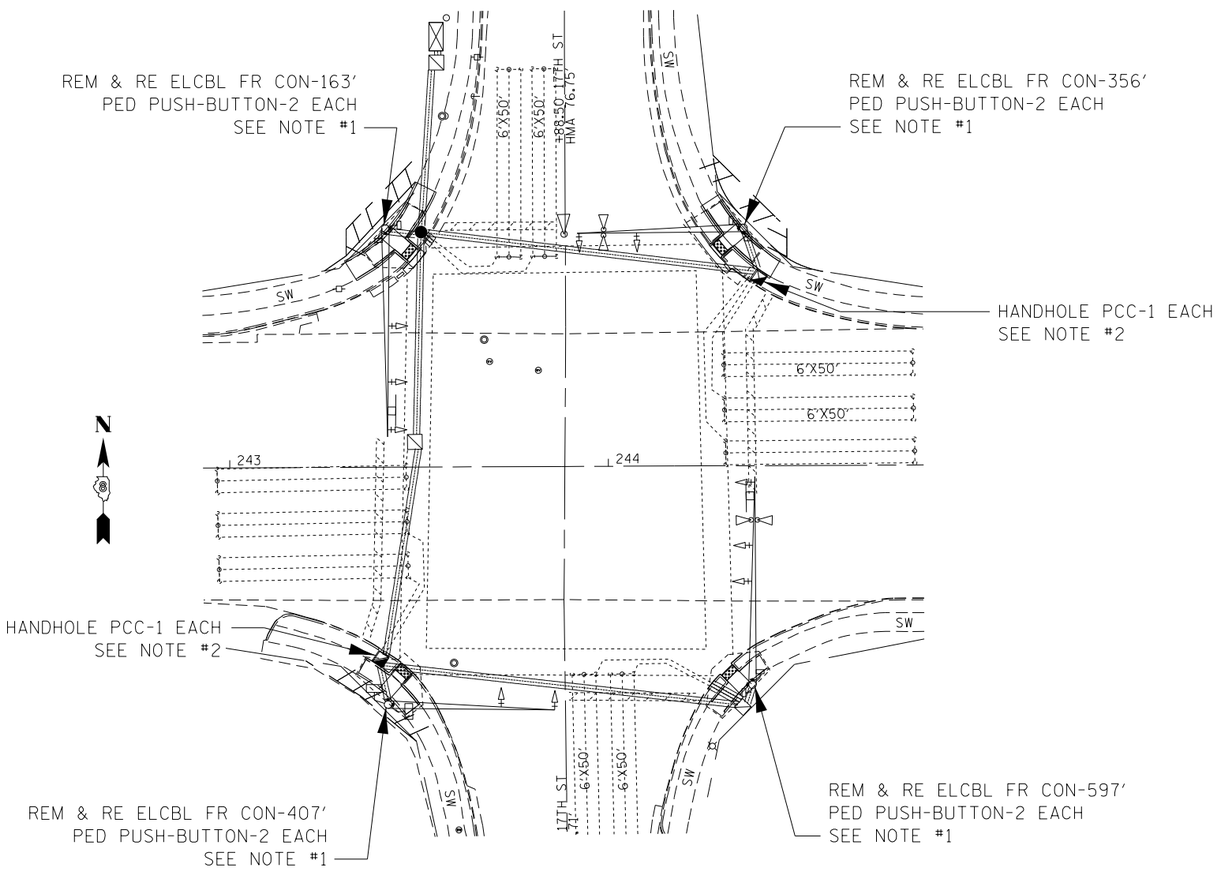

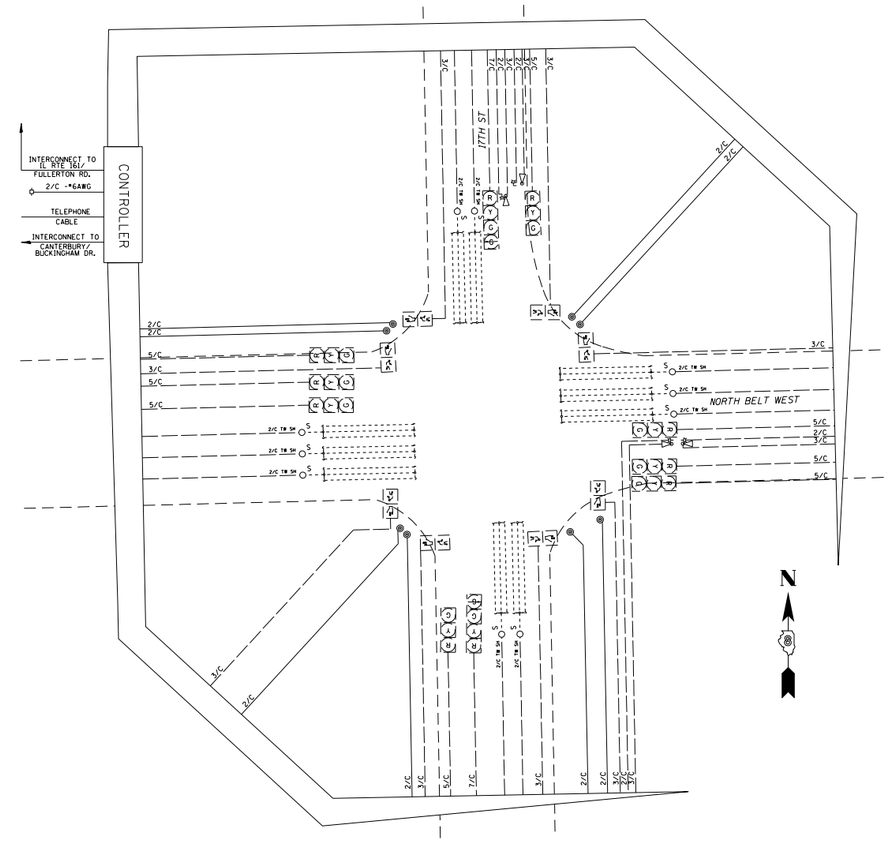

CABLE DIAGRAM LEGEND

———	PROPOSED ELECTRIC CABLE IN CONDUIT
— —	EXISTING ELECTRIC CABLE IN CONDUIT
—○S—	EXISTING CABLE SPLICE
2/C	INDICATES NUMBER OF CONDUCTORS IN CABLE
TW SH	TWISTED AND SHIELDED CABLE
#6	INDICATES AMERICAN WIRE GAUGE (AWG) SIZE 6 CONDUCTOR
-□-	EXISTING SERVICE INSTALLATION

50' 0 50' 100'

SCALE: 1'' = 50'

MODEL: Default
FILE NAME: pw:\\IL084EBIDINTEG.illinois.gov:PWIDOT\Documents\IDOT Offices\District 8\Projects\D876J81\CADData\CADsheets\D876J81-sht-5.dgn

USER NAME = boboja	DESIGNED -	REVISED -	
	DRAWN -	REVISED -	
PLOT SCALE = 40.0000 ' / in.	CHECKED -	REVISED -	
PLOT DATE = 10/5/2018	DATE -	REVISED -	

STATE OF ILLINOIS
DEPARTMENT OF TRANSPORTATION

ADA PEDESTRIAN PUSH-BUTTON REPLACEMENT PLAN
N BELT WEST & 17TH ST

SCALE: SHEET OF SHEETS STA. TO STA.

F.A.U. RTE.	SECTION	COUNTY	TOTAL SHEETS	SHEET NO.
9257	(28-1, 122-1, 122-2)SW-1	ST. CLAIR	25	24
		CONTRACT NO. 76J81		
		ILLINOIS FED. AID PROJECT		

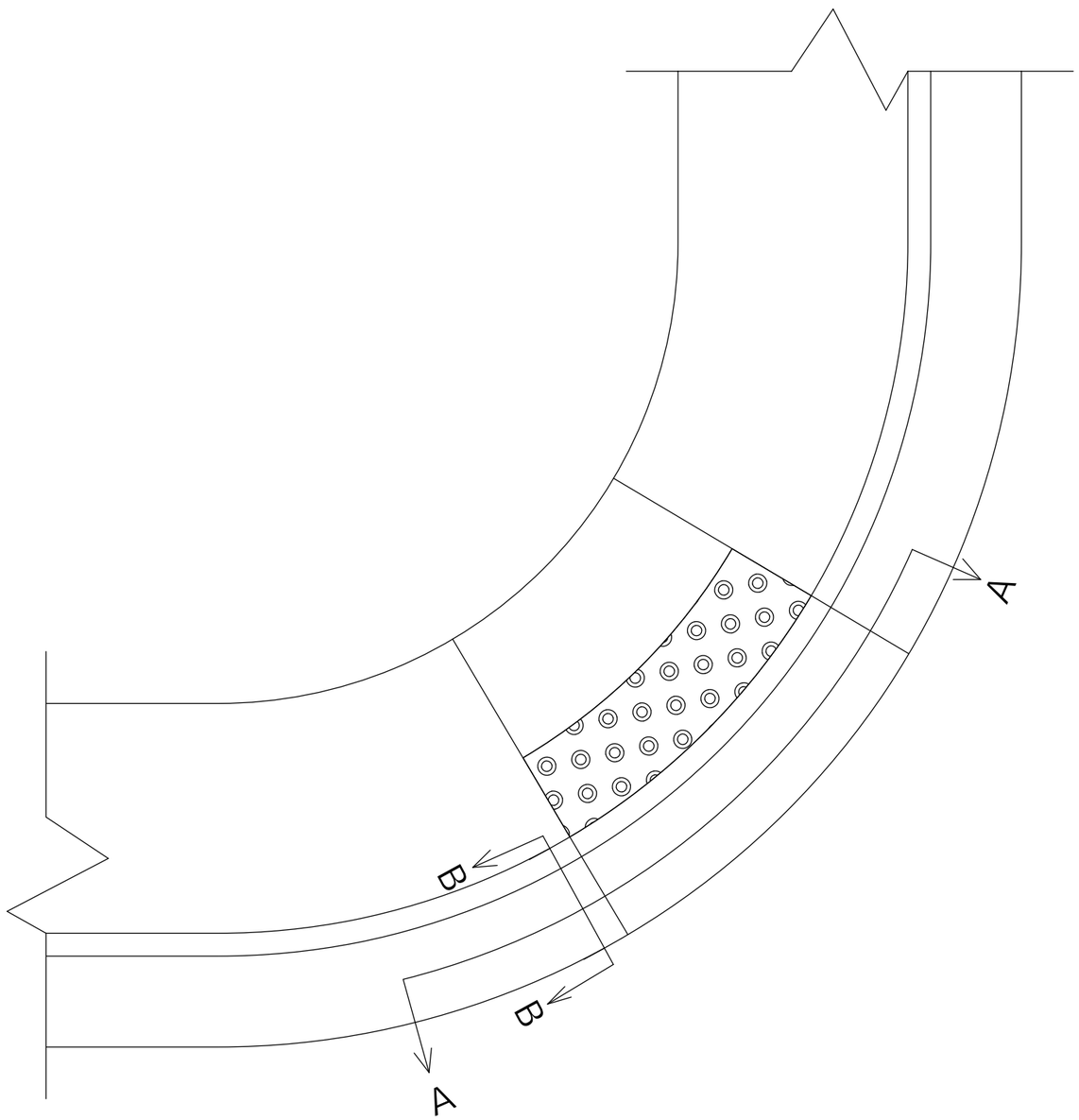

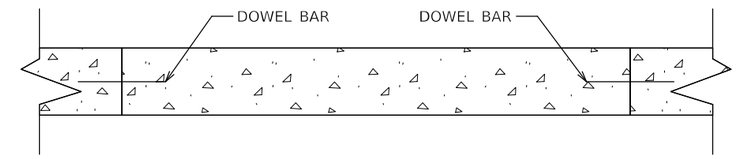

SECTION A–A

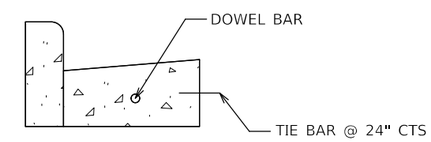

SECTION B–B

LOCATIONS

PLACE LOCATIONS WHERE DETAIL APPLIES HERE

NOT TO SCALE

MODEL: $MODELNAME$
FILE NAME: pw:\\IL084EBIDINTEG.illinois.gov:PWIDOT\Documents\IDOT Office\Data\Struct & Projects\D876181\CADData\CADsheets\D876181-sht-details.dgn

USER NAME = downingch	DESIGNED - _____	REVISED - _____	STATE OF ILLINOIS DEPARTMENT OF TRANSPORTATION	CURB & GUTTER DOWEL BAR DETAIL	F.A.U RTE.	SECTION	COUNTY	TOTAL SHEETS	SHEET NO.
	DRAWN - _____	REVISED - _____			9257	(28-1, 122-1, 122-21SW-1)	ST. CLAIR	25	25
PLOT SCALE = 100.1086 ' / In.	CHECKED - _____	REVISED - _____					CONTRACT NO. 76J81		
PLOT DATE = 1/22/2018	DATE - _____	REVISED - _____		SCALE: NTS SHEET __ OF __ SHEETS STA. _____ TO STA. _____		ILLINOIS	FED. AID PROJECT		