| F.A.I. RTE. | SECTION | COUNTY | TOTAL SHEETS | SHEET NO. |
|---|---|---|---|---|
| 57 | (38-6,38-5)RS,BRR,CLV | IROQUOIS | 213 | 1 |
| | ILLINOIS | CONTRACT NO 66H62 | | |

P-93-046-17
D-93-039-23

**INDEX OF SHEETS** 03-08-2024 LETTING ITEM 037


| | |
|---|---|
| 1 | COVER SHEET |
| 2 | GENERAL NOTES, STANDARDS & COMMITMENTS |
| 3 | HMA MIX TABLE |
| 4 - 7 | LINE DIAGRAM |
| 8 - 16 | SUMMARY OF QUANTITIES |
| 17 - 25 | TYPICAL SECTIONS |
| 26 - 58 | SCHEDULES |
| 59 - 80 | ALIGNMENT |
| 81 - 99 | PLAN |
| 100 - 105 | STAGING TYPICALS |
| 106 - 122 | PRESTAGE PLAN |
| 123 - 139 | STAGE 1 PLAN |
| 140 - 156 | STAGE 2 PLAN |
| 157 - 173 | STAGE 4 PLAN |
| 174 - 190 | STAGE 4 PLAN |
| 191 - 213 | DETAILS |


# STATE OF ILLINOIS
# DEPARTMENT OF TRANSPORTATION

# PROPOSED HIGHWAY PLANS

## FAI ROUTE 57 (I-57 )
## SECTION (38-6,38-5)RS,BRR,CLV
## PROJECT NHPP-9TBX(208)
## MILLING & RESURFACING (DESIGNED OVERLAY)
## IROQUOIS COUNTY

C-93-059-023

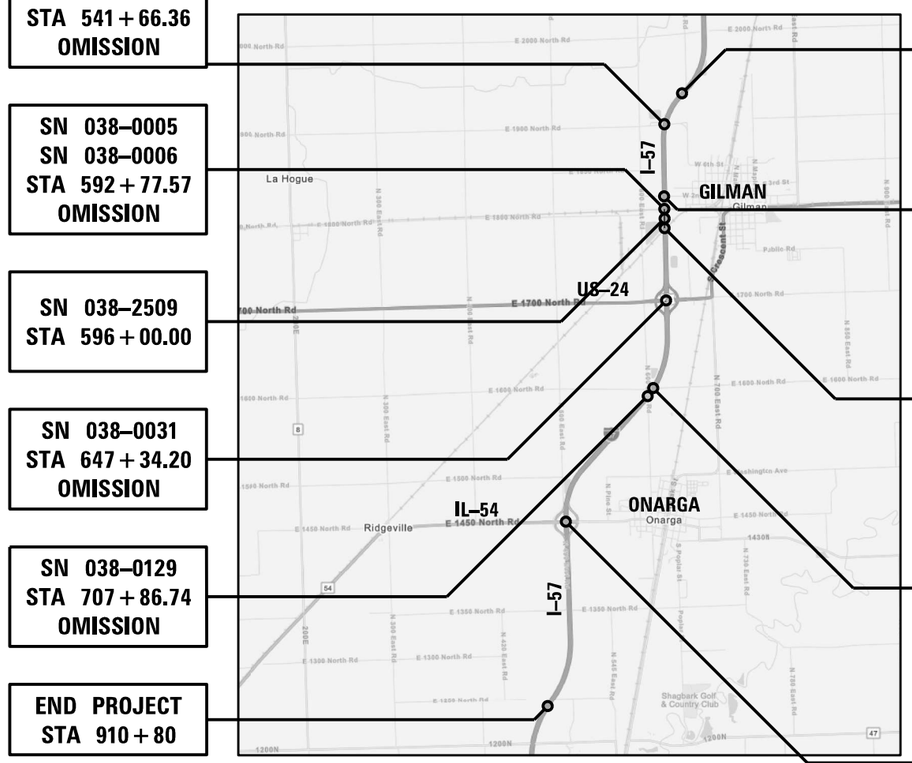


SN 038–0086
STA 541 + 66.36
OMISSION

SN 038–0005
SN 038–0006
STA 592 + 77.57
OMISSION

SN 038–2509
STA 596 + 00.00

SN 038–0031
STA 647 + 34.20
OMISSION

SN 038–0129
STA 707 + 86.74
OMISSION

END PROJECT
STA 910 + 80

BEGIN PROJECT
STA 520 + 00

SN 038–0007
SN 038–0008
STA 585 + 12.21
OMISSION

SN 038–0003
SN 038–0004
STA 604 + 54.72
OMISSION

SN 038–0001
SN 038–0002
STA 697 + 75.00
OMISSION

SN 038–0048
STA 800 + 59.81
OMISSION

N

"MAP NOT TO SCALE"

GROSS LENGTH = 39079.36 FT. = 7.401MILE
NET LENGTH = 37883.17 FT. = 7.175 MILE

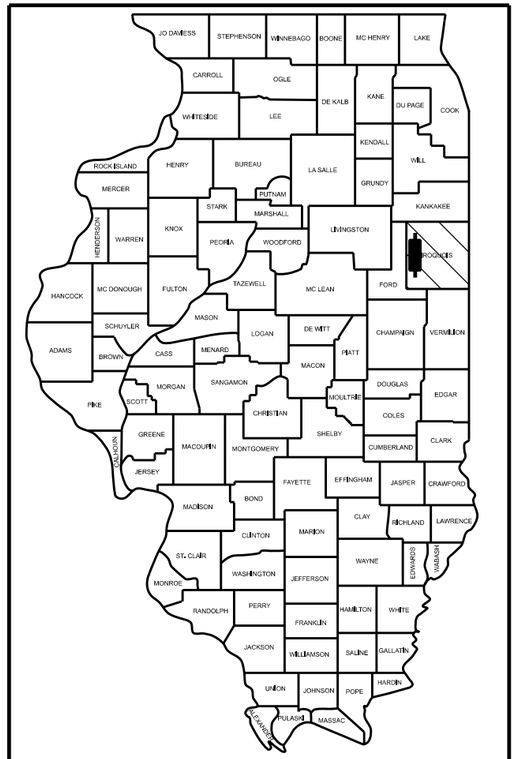


LOCATION OF SECTION INDICATED THUS: -

**FUNCTIONAL CLASSIFICATION**

INTERSTATE
2021 ADT = 17400
PV = 57.0% SU = 4.5% MU = 38.5%

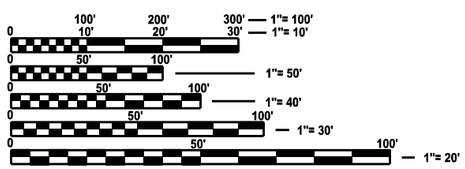


FULL SIZE PLANS HAVE BEEN PREPARED USING STANDARD ENGINEERING SCALES. REDUCED SIZED PLANS WILL NOT CONFORM TO STANDARD SCALES. IN MAKING MEASUREMENTS ON REDUCED PLANS, THE ABOVE SCALES MAY BE USED.

J.U.L.I.E.
JOINT UTILITY LOCATION INFORMATION FOR EXCAVATION
1-800-892-0123
OR 811

STATE OF ILLINOIS
DEPARTMENT OF TRANSPORTATION

SUBMITTED December 15 2023
MAS REGIONAL ENGINEER
February 2, 2024
ENGINEER OF DESIGN AND ENVIRONMENT
February 2, 2024
DIRECTOR OF HIGHWAYS PROJECT IMPLEMENTATION


**PROJECT ENGINEER: JOSEPH KANNEL P.E.**
**UNIT CHIEF: STEPHENIE CARMIN**
DISTRICT 3 NO. (815) 434–6131

**CONTRACT NO. 66H62**

**PRINTED BY THE AUTHORITY OF THE STATE OF ILLINOIS**

REV. 1/22/24 REV. 1/8/24

## LIST OF ILLINOIS DOT HIGHWAY STANDARDS

| | |
|---|---|
| 000001-08 | STANDARD SYMBOLS, ABBREVIATIONS AND PATTERNS |
| 001001-02 | AREAS OF REINFORCEMENT BARS |
| 001006 | DECIMAL OF AN INCH AND OF A FOOT |
| 280001-07 | TEMPORARY EROSION CONTROL SYSTEMS |
| 285001-02 | FABRIC FORMED CONCRETE REVETMENT MATS |
| 442001-04 | CLASS A PATCHES |
| 542001-06 | CONRETE END SECTIONS FOR PIPE CULVERTS 15" THRU 84" DIAMETER |
| 542301-03 | PRECAST REINFORCED CONCRETE FLARED END SECTION |
| 542311-07 | TRAVERSABLE PIPE GRATE FOR CONCRETE END SECTION |
| 601001-05 | PIPE UNDERDRAINS |
| 601101-02 | CONCRETE HEADWALL FOR PIPE UNDERDRAINS |
| 606001-08 | CONCRETE CURB TYPE B AND COMBINATION CONCRETE CURB AND GUTTER |
| 635001-02 | DELINEATORS |
| 642001-03 | SHOULDER RUMBLE STRIPS, 16 INCH |
| 643001-02 | SAND MODULE IMPACT ATTENUATORS |
| 701001-02 | OFF-ROAD OPERATIONS 2L, 2W, MORE THAN 15' AWAY |
| 701011-04 | OFF-ROAD MOVING OPERATIONS 2L, 2W, DAY ONLY |
| 701106-02 | OFF-ROAD OPERATIONS, MULTILANE, MORE THAN 15' AWAY |
| 701301-04 | LANE CLOSURE, 2L, 2W, SHORT TIME OPERATIONS |
| 701400- 12 | APPROACH TO LANE CLOSURE, FREEWAY/EXPRESSWAY |
| 701401-13 | LANE CLOSURE, FREEWAY/EXPRESSWAY |
| 701402-12 | LANE CLOSURE, FREEWAY/EXPRESSWAY, WITH BARRIER |
| 701406-13 | LANE CLOSURE, FREEWAY/EXPRESSWAY, DAY OPERATIONS ONLY |
| 701411-09 | LANE CLOSURE, MULTILANE, AT ENTRANCE OR EXIT RAMP FOR SPEEDS ≥ 45 MPH |
| 701426-09 | LANE CLOSURE, MULTILANE INTERMITTENT OR MOVING OPERATION, FOR SPEEDS ≥ 45 MPH |
| 701428-01 | TRAFFIC CONTROL, SETUP AND REMOVAL, FREEWAY/EXPRESSWAY |
| 701451-05 | RAMP CLOSURE FREEWAY/EXPRESSWAY |
| 701456-05 | PARTIAL EXIT RAMP CLOSURE FREEWAY/EXPRESSWAY |
| 701901- 09 | TRAFFIC CONTROL DEVICES |
| 704001-08 | TEMPORARY CONCRETE BARRIER |
| 720001-01 | SIGN PANEL MOUNTING DETAILS |
| 720006-04 | SIGN PANEL ERECTION DETAILS |
| 720011-01 | METAL POSTS FOR SIGNS, MARKERS AND DELINEATORS |
| 725001-01 | OBJECT AND TERMINAL MARKERS |
| 728001-01 | TELESCOPING STEEL SIGN SUPPORT |
| 729001-01 | APPLICATIONS OF TYPE A AND B METAL POSTS (FOR SIGNS & MARKERS) |
| 731001-01 | BASE FOR TELESCOPING STEEL SIGN SUPPORT |
| 780001-05 | TYPICAL PAVEMENT MARKINGS |
| 781001-04 | TYPICAL APPLICATIONS RAISED REFLECTIVE PAVEMENT MARKERS |
| 782006-01 | GUARDRAIL AND BARRIER WALL REFLECTOR MOUNTING DETAILS |

## GENERAL NOTES

EXCEPT AS NOTED ON THE PLANS, PAVEMENT GRADES SHOWN ARE AT THE TOP OF PAVEMENT SURFACES.

BEFORE ORDERING PIPE CULVERTS OR PIPE DRAINS, THE CONTRACTOR SHALL CONSULT THE ENGINEER FOR EXACT LENGTHS.

THE ENGINEER WILL BE THE SOLE JUDGE CONCERNING CURING TIME FOR THE VARIOUS HMA LIFTS.

SHORT TERM PAVEMENT MARKING SHALL BE USED TO OUTLINE EXIT AND ENTRANCE RAMPS FOR THE PRIME COAT APPLICATION AND EACH RESURFACING LIFT.

ON EXISTING PAVEMENT WHICH MAY BE SUPERELEVATED, THE NEW HMA PAVEMENT SHALL BE BUILT WITH THE SAME SUPERELEVATION UNLESS NEW SUPERELEVATION RATES ARE GIVEN ON THE PLANS.

ALL ELEVATIONS REFERRING TO U.S.G.S. MEAN SEA LEVEL DATUM.

THE FOLLOWING RATES OF APPLICATION HAVE BEEN USED IN CALCULATING PLAN QUANTITIES:

| | | |
|---|---|---|
| GRANULAR MATERIALS | 2.05 | TONS / CU YD |
| HMA RESURFACING | 112 | LBS / SQ YD / IN |
| SHORT TERM PAVEMENT MARKING | 10 | FT /100 FT OF APPLICATION |
| TACK COAT: NEW HMA | 0.025 | LBS/ SQ ST |
| TACK COAT: MILLED HMA | 0.05 | LBS/ SQ ST |
| MIX FOR CRACKS, JTS & FLGWYS | 0.0003 | TONS / SQ YD |
| LEVEL BINDER (HAND METHOD) | 0.0005 | TONS / SQ YD |

THE CONTRACTOR'S ATTENTION IS DIRECTED TO THE PRESENCE OF DEPARTMENT-OWNED UNDERGROUND ELECTRICAL CABLE WITHIN THE LIMITS OF THE PROPOSED IMPROVEMENT. THE CONTRACTOR SHALL REQUEST THE ILLINOIS DEPARTMENT OF TRANSPORTATION IN OTTAWA (815-434-8417) TO LOCATE THE UNDERGROUND FACILITIES, PROVIDING A MINIMUM OF 72 HOURS NOTICE. THE DEPARTMENT IS NOT A MEMBER OF THE JOINT UTILITY LOCATING INFORMATION FOR EXCAVATORS (JULIE) SYSTEM.

ALL DAMAGE TO DEPARTMENT OWNED UNDERGROUND FACILITIES, CAUSED BY THE CONTRACTOR SHALL BE REPAIRED TO THE SATISFACTION OF THE ENGINEER AND AT NO EXPENSE TO THE DEPARTMENT. THIS SHALL INCLUDE ALL TEMPORARY REPAIRS REQUIRED TO KEEP THE FACILITY OPERATIONAL WHILE MATERIAL IS BEING OBTAINED TO MAKE PERMANENT REPAIRS. SPLICING OF ELECTRIC CABLE WILL NOT BE ALLOWED. ELECTRIC CABLE SHALL BE REPLACED FROM POLE TO POLE OR CONTROLLER.

THE WORK REQUIRED TO CONNECT ANY SEWER TO AN EXISTING DRAINAGE STRUCTURE OR PIPE WILL NOT BE PAID FOR SEPARATELY, BUT WILL BE CONSIDERED AS INCLUDED IN THE CONTRACT UNIT PRICE BID FOR THE SEWER ITEMS.

MEMBERS OF JULIE KNOWN TO BE WITHIN THE LIMITS OF THE IMPROVEMENT ARE:

| | |
|---|---|
| CORN BELT ENERGY | ANR PIPELINE CO |
| FRONTIER | AT&T |
| HENRY COUNTY TELEPHONE | MTCO COMMUNICATIONS |
| AMEREN IP | MIDWEST FIBER NETWORKS |
| NATURAL GAS PIPELINE CO | MEDIACOM |

## GENERAL NOTES

NON-MEMBERS OF JULIE KNOWN TO BE WITHIN THE LIMITS OF THE IMPROVEMENT ARE:

THE CONTRACTOR'S ATTENTION IS DIRECTED TO THE PRESENCE OF DEPARTMENT-OWNED UNDERGROUND ELECTRICAL CABLE WITHIN THE LIMITS OF THE PROPOSED IMPROVEMENT. THE CONTRACTOR SHALL REQUEST THE OF THE PROPOSED IMPROVEMENT. THE CONTRACTOR SHALL REQUEST THE ILLINOIS DEPARTMENT OF TRANSPORTATION IN OTTAWA (815-434-8417) TO LOCATE THE UNDERGROUND FACILITIES. PROVIDING A MINIMUM OF 72 HOURS NOTICE. THE DEPARTMENT JS NOT A MEMBER OF THE JOINT UTILITY LOCATING INFORMATION FOR EXCAVATORS (JULIE) SYSTEM.

ALL DAMAGE TO DEPARTMENT OWNED UNDERGROUND FACILITIES,CAUSED BY THE CONTRACTOR SHALL BE REPAIRED TO THE SATISFACTION OF THE DEPARTMENT AT THE CONTRACTOR'S EXPENSE. THIS SHALL INCLUDE ALL TEMPORARY REPAIRS REQUIRED TO KEEP THE FACILITY OPERATIONAL WHILE MATERIAL IS BEING OBTAINED TO MAKE PERMANENT REPAIRS. SPLICING OF ELECTRIC CABLE WILL NOT BE ALLOWED. ELECTRIC CABLE SHALL BE REPLACED FROM POLE TO POLEOR CONTROLLER.

## COMMITMENTS

NONE

STATE OF ILLINOIS
DEPARTMENT OF TRANSPORTATION
DISTRICT THREE
AS BUILT INFORMATION

SUPERVISING CONSTRUCTION FIELD ENGINEER

RESIDENT ENGINEER / TECHNICIAN

START & END DATES OF CONSTRUCTION:

INSPECTORS:

MODEL: Default
FILE NAME: c:\pw_work\pwidot\ferguson\hd0874886\D366H62-Cover & General Notes.dgn

| | | | |
|---|---|---|---|
| USER NAME = stephenie.carmin | DESIGNED - | REVISED - | |
| | DRAWN - | REVISED - | |
| PLOT SCALE = 100.000 ' / in. | CHECKED - | REVISED - | |
| PLOT DATE = 12/15/2023 | DATE - | REVISED - | |

STATE OF ILLINOIS
DEPARTMENT OF TRANSPORTATION

GENERAL NOTES, STANDARDS & COMMITMENTS

SCALE: SHEET OF SHEETS STA. TO STA.

| F.A.I. RTE. | SECTION | COUNTY | TOTAL SHEETS | SHEET NO. |
|---|---|---|---|---|
| 57 | (38-6,38-5)RS,BRR,CLV | IROQUOIS | 213 | 2 |

CONTRACT NO. 66H62

ILLINOIS | FED. AID PROJECT

REV. 1/9/24

## HMA MIXTURE REQUIREMENT TABLE

| LOCATIONS: | I-57 N. OF STA.740+50 | I-57/US 24 & IL 54 RAMPS | I-57 S. OF STA 740+50 | I-57 S. OF STA. 740+50 US 24 & IL 54 RAMPS | I-57 PRE-STAGE SHOULDER | I-57 - 4' SHOULDER | I-57 - 10' SHOULDER | ENTIRE PROJECT |
|---|---|---|---|---|---|---|---|---|
| MIXTURE USE(S): | HMA BINDER | SMA SURFACE | HMA BINDER | HMA BINDER | HMA BINDER | HMA SURFACE | HMA SURFACE | HMA PARTIAL DEPTH PATCH 2.00" |
| BINDER GRADE (PG): | SBS PG 70-28 | SBS PG 76-28 | SBS PG 70-28 | SBS PG 76-28 | SBS PG 70-28 | SBS PG 70-28 | SBS PG 70-28 | SBS PG 70-28 |
| DESIGN AIR VOIDS: | 4.0% @ N90 | 4.0% @ N80 | 4.0% @ N90 | 4.0% @ N50 | 4.0% @ N70 | 4.0% @ N70 | 4.0% @ N70 | 4.0% @ N70 |
| MIXTURE COMPOSITION: (MIXTURE GRADATION) | IL 19.0 | IL 12.5 | IL 9.5 | IL 4.75 | IL 19.0 | IL 9.5 | IL 9.5 | IL 9.5 |
| FRICTION AGGREGATE: | | MIXTURE E | | | | MIXTURE D | MIXTURE D | |
| MIXTURE WEIGHT: | 112.0 LB/SY/IN | 112.0 LB/SY/IN | 112.0 LB/SY/IN | 112.0 LB/SY/IN | 112.0 LB/SY/IN | 112.0 LB/SY/IN | 112.0 LB/SY/IN | 112.0 LB/SY/IN |
| QUALITY MANAGEMENT PROGRAM: | PFP | PFP | PFP | PFP | QCQA | QCQA | QCP | QCQA |
| SUBLOT SIZE: | 1000 TONS | 1000 TONS | 1000 TONS | 1000 TONS | N/A | N/A | 1000 TONS | N/A |
| DENSITY TEST METHOD: | CORES | CORES | CORES | CORES | CORES/NUCLEAR | CORES/NUCLEAR | CORES | CORES/NUCLEAR |
| MATERIAL TRANSFER DEVICE (REQUIRED) | YES | YES | YES | YES | NO | NO | NO | NO |

NOT TO SCALE

CURVE 11
PI STA. = 501+63.18
Δ = 43°02'09" (RT)
D = 01°30'00"
R = 3819.96'
T = 1506.10'
L = 2869.23'
E = 286.19'
e = 0.0458%
PC STA. = 486+57.08
PT STA. = 515+26.31

SUPERELEVATION TRANSITION
STA 485+20.21 TO 487+03.21
FULL S.E. 487+03.21 TO 514+80.83
STA 514+80.83 TO 516+63.83

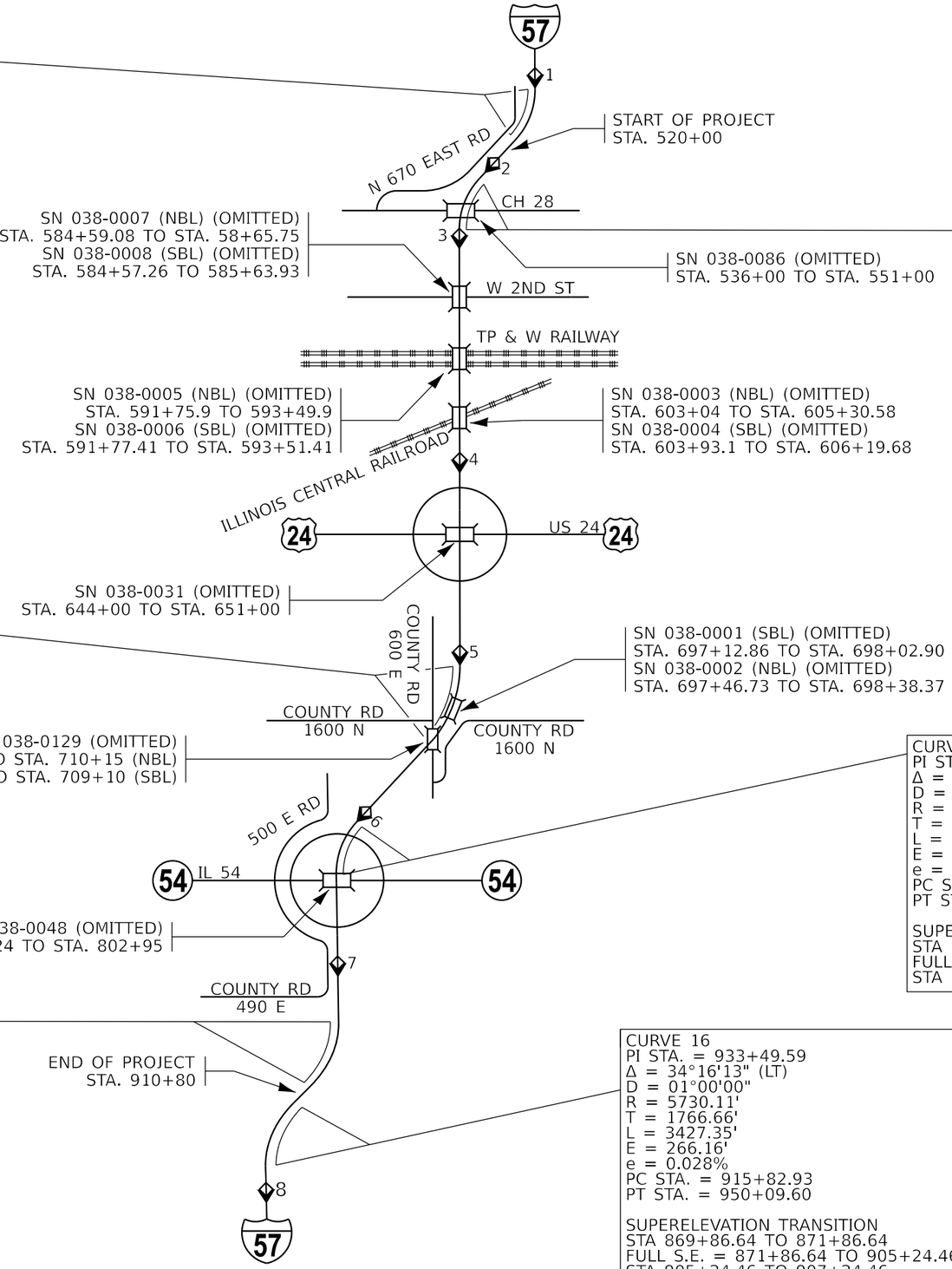


CURVE 12
PI STA. = 537+90.50
Δ = 43°3'53" (LT)
D = 1°29'58"
R = 3820.84'
T = 1507.56'
L = 2871.82'
E = 286.66'
e = 1.7%
PC STA. = 522+82.94
PT STA. = 551+50.99

SUPERELEVATION TRANSITION
STA 521+67.29 TO 523+05.29
FULL S.E. = 523+05.29 TO 551+25.69
STA 551+25.69 TO 552+63.69

CURVE 13
PI STA. = 691+74.79
Δ = 43°00'58" (RT)
D = 01°00'00"
R = 5729.96'
T = 2258.03'
L = 4301.91'
E = 428.87'
e = 1.0%
PC STA. = 669+16.76
PT STA. = 712+18.67

SUPERELEVATION TRANSITION
STA 667+47.78 TO 669+27.78
FULL S.E. = 669+27.78 TO 711+99.67
STA 711+99.67 TO 713+79.67

CURVE 14
PI STA. = 782+48.82
Δ = 43°48'11" (LT)
D = 01°30'00"
R = 3819.93'
T = 1535.72'
L = 2920.37'
E = 297.14'
e = 1.7%
PC STA. = 767+13.10
PT STA. = 796+33.47

SUPERELEVATION TRANSITION
STA 765+96.79 TO 767+34.79
FULL S.E. = 767+34.79 TO 796+03.81
STA 796+03.81 TO 797+41.81

CURVE 15
PI STA. = 889+14.80
Δ = 34°41'30" (RT)
D = 00°59'59"
R = 5730.70'
T = 1789.95'
L = 3469.86'
E = 273.04'
e = 2.8%
PC STA. = 871+24.85
PT STA. = 905+94.71

SUPERELEVATION TRANSITION
STA 869+90.64 TO 871+62.64
FULL S.E. 871+62.64 TO 905+48.46
STA 905+48.46 TO 907+20.46

CURVE 16
PI STA. = 933+49.59
Δ = 34°16'13" (LT)
D = 01°00'00"
R = 5730.11'
T = 1766.66'
L = 3427.35'
E = 266.16'
e = 0.028%
PC STA. = 915+82.93
PT STA. = 950+09.60

SUPERELEVATION TRANSITION
STA 869+86.64 TO 871+86.64
FULL S.E. = 871+86.64 TO 905+24.46
STA 905+24.46 TO 907+24.46

| STATION EQUATIONS | BK ◇ AH |
|---|---|
| 1 - STA. 486+56.71 BK | = STA. 486+57.08 AH |
| 2 - STA. 522+80.70 BK | = STA. 522+82.94 AH |
| 3 - STA. 551+54.76 BK | = STA. 551+50.99 AH |
| 4 - STA. 617+98.03 BK | = STA. 618+00.00 AH |
| 5 - STA. 669+12.62 BK | = STA. 669+12.99 AH |
| 6 - STA. 767+09.95 BK | = STA. 767+09.33 AH |
| 7 - STA. 827+12.61 BK | = STA. 827+12.08 AH |
| 8 - STA. 950+06.50 BK | = STA. 950+05.83 AH |

MODEL: Default
FILE NAME: pw://bldxw.bentley.com:PWIDOT/Documents/IDOT Offices/District 3/ORD Projects/D368H62/CADData/CADsheets/D368H62-line diagram

| | | | |
|---|---|---|---|
| USER NAME = Joshua.Ferguson | DESIGNED - | REVISED - | |
| | DRAWN - CODY J | REVISED - | |
| PLOT SCALE = 2500.000 ' / in. | CHECKED - | REVISED - | |
| PLOT DATE = 12/15/2023 | DATE - | REVISED - | |

**STATE OF ILLINOIS**
**DEPARTMENT OF TRANSPORTATION**

**LINE DIAGRAM**
**MAINLINE CURVES AND STATION EQUATIONS**

SCALE: SHEET 1 OF 4 SHEETS STA. TO STA.

| F.A.I. RTE. | SECTION | COUNTY | TOTAL SHEETS | SHEET NO. |
|---|---|---|---|---|
| 57 | (38-6,38-5)RS,BRR,CLV | IROQUOIS | 213 | 4 |

CONTRACT NO. 66H62

ILLINOIS FED. AID PROJECT

Long Section Number

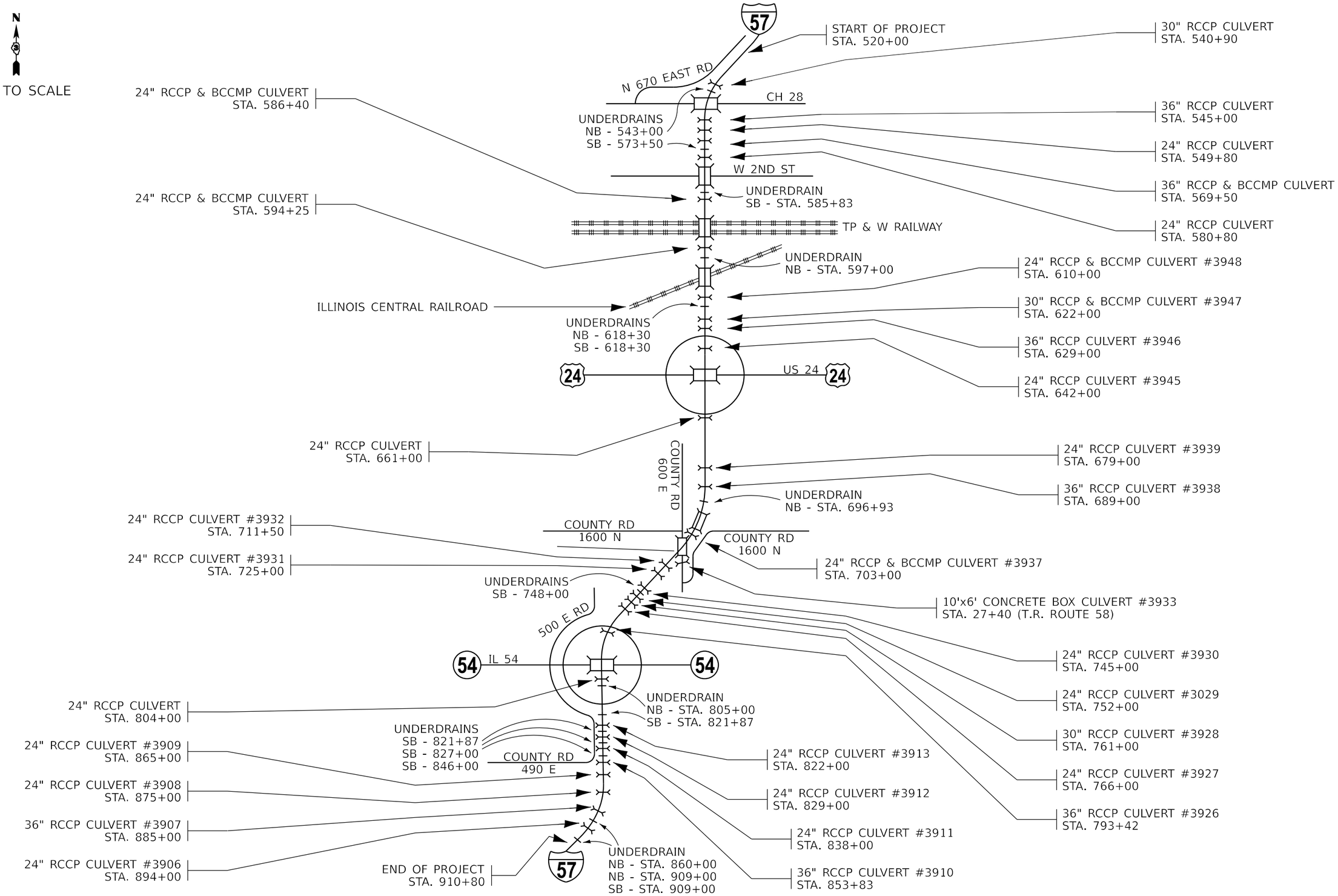


MODEL: Default
FILE NAME: pw://ildot-pw.bentley.com:PWIDOT/Documents/IDOT Offices/District 3/ORD Projects/D369H62/CADData/CADsheets/D369H62-line diagram

| | | | |
|---|---|---|---|
| USER NAME = Joshua.Ferguson | DESIGNED - | REVISED - | |
| | DRAWN - CODY J | REVISED - | |
| PLOT SCALE = 2500.000 ' / in. | CHECKED - | REVISED - | |
| PLOT DATE = 12/15/2023 | DATE - | REVISED - | |

**STATE OF ILLINOIS**
**DEPARTMENT OF TRANSPORTATION**

**LINE DIAGRAM**
**DRAINAGE STRUCTURES**

SCALE: | SHEET 2 OF 4 SHEETS | STA. | TO STA.

| F.A.I. RTE. | SECTION | COUNTY | TOTAL SHEETS | SHEET NO. |
|---|---|---|---|---|
| 57 | (38-6,38-5)RS,BRR,CLV | IROQUOIS | 213 | 5 |

CONTRACT NO. 66H62

ILLINOIS | FED. AID PROJECT

Long Section Number

EX CURVE A1
PI STA = 3+53.98
Δ = 47°08'56" (LT)
D = 12°50'48"
R = 446.00'
T = 194.62'
L = 367.01'
E = 40.61'
e = 0.083%
PC STA = 1+59.36
PT STA = 5+26.37
SUPERELEVATION TRANSITION
1+09.23 TO 2+83.23
FULL S.E. = 2+83.23 TO 4+68.37
4+68.37 TO 6+42.37

EX CURVE A2
PI STA = 10+97.50
Δ = 48°04'41" (RT)
D = 08°18'13"
R = 690.00'
T = 307.77'
L = 578.99'
E = 65.53'
e = 0.083%
PC STA = 7+89.73
PT STA = 13+68.73
SUPERELEVATION TRANSITION
6+73.73 TO 8+47.73
FULL S.E. = 8+47.73 TO 12+28.45
12+28.45 TO 13+68.72

EX CURVE B1
PI STA = 9+42.35
Δ = 44°10'01" (RT)
D = 08°18'13"
R = 690.00'
T = 279.95'
L = 531.89'
E = 54.63'
e = 0.083%
PC STA = 6+62.40
PT STA = 11+94.29
SUPERELEVATION TRANSITION
4+88.40 TO 6+62.40
FULL S.E. = 6+62.40 TO 11+36.29
11+36.29 TO 13+10.29

EX CURVE B2
PI STA = 15+73.78
Δ = 29°16'05" (LT)
D = 12°50'47"
R = 446.01'
T = 116.46'
L = 227.83'
E = 14.95'
e = 0.08%
PC STA = 14+57.32
PT STA = 16+85.15
SUPERELEVATION TRANSITION
3+45.32 TO 15+13.32
FULL S.E. = 15+13.32 TO 16+25.77
16+25.77 TO 18+03.91

EX CURVE C1
PI STA = 9+43.19
Δ = 44°17'11" (RT)
D = 08°18'13"
R = 690.00'
T = 280.79'
L = 533.33'
E = 54.94'
e = 0.083%
PC STA = 6+62.40
PT STA = 11+95.73
SUPERELEVATION TRANSITION
STA 4+88.40 TO 6+62.40
FULL S.E. = 6+62.40 TO 11+37.73
STA 11+37.73 TO 13+11.73

EX CURVE C2
PI STA = 15+78.14
Δ = 29°46'59" (LT)
D = 12°50'48"
R = 445.99'
T = 118.60'
L = 231.83'
E = 15.50'
e = 0.082%
PC STA = 14+59.54
PT STA = 16+91.38
SUPERELEVATION TRANSITION
STA 13+45.08 TO 15+17.08
FULL S.E. = 15+17.08 TO 16+31.36
STA 16+31.36 TO 18+03.36

EX CURVE D1
PI STA = 3+52.43
Δ = 46°43'44" (LT)
D = 12°50'48"
R = 446.00'
T = 192.67'
L = 363.75'
E = 39.84'
e = 0.083%
PC STA = 1+59.76
PT STA = 5+23.51
SUPERELEVATION TRANSITION
STA 1+09.25 TO 2+83.25
FULL S.E. = 2+83.25 TO 4+65.51
STA 4+65.51 TO 6+39.51

EX CURVE D2
PI STA = 10+94.28
Δ = 48°01'36" (RT)
D = 08°18'13"
R = 690.00'
T = 307.40'
L = 578.38'
E = 65.38'
e = 0.083%
PC STA = 7+86.88
PT STA = 13+65.25
SUPERELEVATION TRANSITION
STA 6+70.88 TO 8+44.88
FULL S.E. = 8+44.88 TO 12+24.99
STA 12+24.99 TO 13+65.26

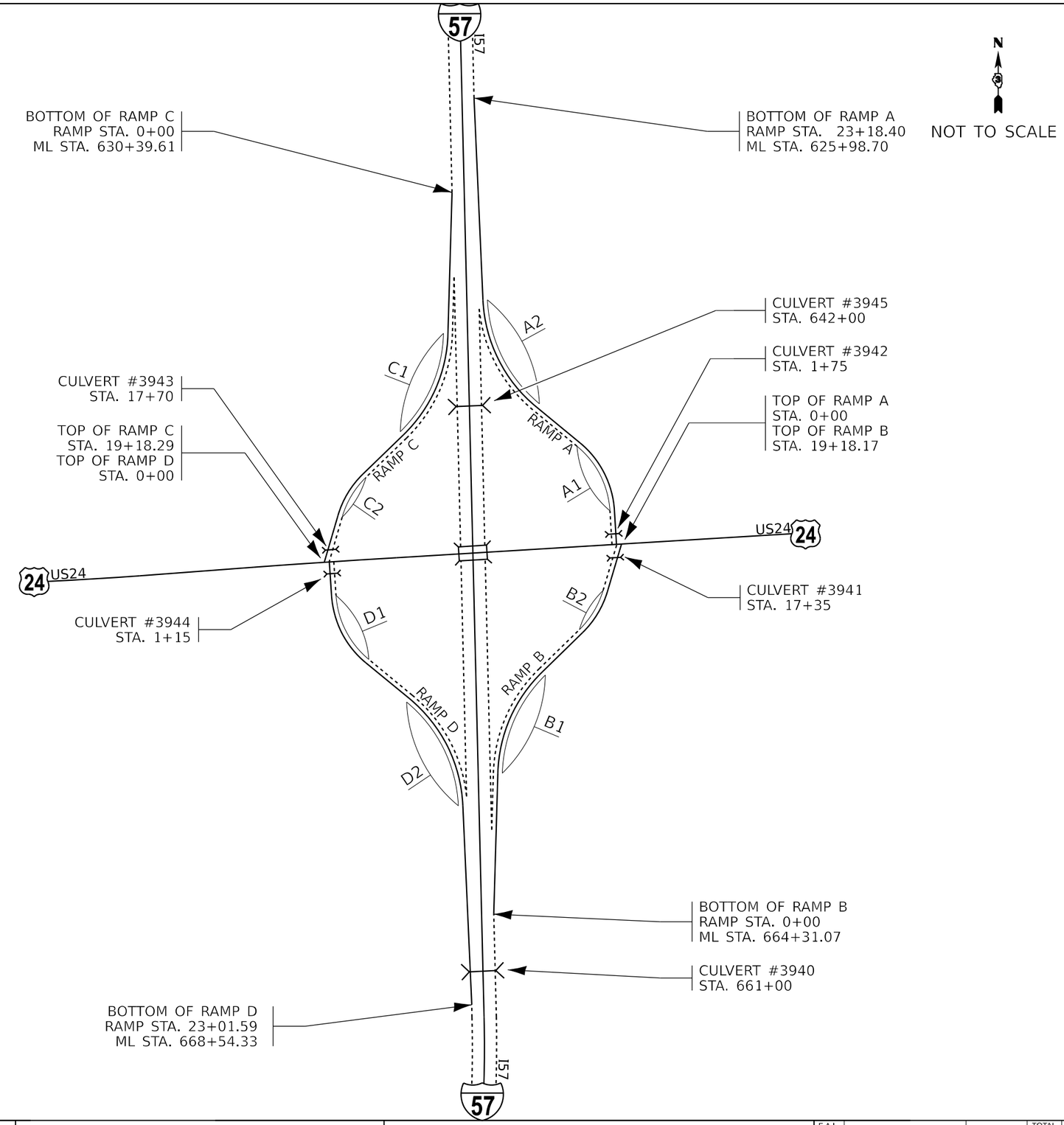


*RAMP ALIGNMENTS ARE ALONG OUTSIDE EOP

MODEL: Default
FILE NAME: pw://ildot-pw.bentley.com:PWIDOT/Documents/IDOT Offices/District 3/ORD Projects/D368H60/CADData/CADsheets/D368H62line diagram

| | | | |
|---|---|---|---|
| USER NAME = Joshua.Ferguson | DESIGNED - | REVISED - | |
| | DRAWN - CODY J | REVISED - | |
| PLOT SCALE = 2500.000 ' / in. | CHECKED - | REVISED - | |
| PLOT DATE = 12/15/2023 | DATE - | REVISED - | |

**STATE OF ILLINOIS**
**DEPARTMENT OF TRANSPORTATION**

**LINE DIAGRAM**
**I-57 / US24 INTERCHANGE RAMPS**

SCALE: | SHEET 3 OF 4 SHEETS | STA. | TO STA.

| F.A.I. RTE. | SECTION | COUNTY | TOTAL SHEETS | SHEET NO. |
|---|---|---|---|---|
| 57 | (38-6,38-5)RS,BRR,CLV | IROQUOIS | 213 | 6 |
| | | CONTRACT NO. 66H62 | | |
| | | ILLINOIS FED. AID PROJECT | | |

EX CURVE A1
PI STA = 3+49.36
Δ = 46°10'41" (LT)
D = 12°50'48"
R = 446.00'
T = 190.13'
L = 359.46'
E = 38.84'
e = 0.083%
PC STA = 1+59.23
PT STA = 5+18.69
SUPERELEVATION TRANSITION
STA 1+09.23 TO 2+83.23
FULL S.E. = 2+83.23 TO 4+60.69
STA 4+60.69 TO 6+34.69

EX CURVE A2
PI STA = 11+56.89
Δ = 57°04'19" (RT)
D = 08°18'13"
R = 690.00'
T = 375.20'
L = 687.30'
E = 95.41'
e = 0.083%
PC STA = 7+81.69
PT STA = 14+68.99
SUPERELEVATION TRANSITION
STA 6+65.69 TO 8+39.65
FULL S.E. = 8+39.65 TO 13+28.72
STA 13+28.72 TO 14+68.99

EX CURVE A3
PI STA = 19+43.34
Δ = 14°24'58" (RT)
D = 01°31'39"
R = 3750.65'
T = 474.35'
L = 943.69'
E = 29.88'
PC STA = 14+68.99
PT STA = 24+12.68

EX CURVE B1
PI STA = 9+40.82
Δ = 43°56'55" (RT)
D = 08°18'13"
R = 690.00'
T = 278.42'
L = 529.26'
E = 54.05'
e = 0.083%
PC STA = 6+62.40
PT STA = 11+91.66
SUPERELEVATION TRANSITION
STA 4+88.40 TO 6+62.40
FULL S.E. = 6+62.40 TO 11+33.66
STA 11+33.66 TO 13+07.66

EX CURVE B2
PI STA = 15+56.71
Δ = 25°46'29" (LT)
D = 12°50'48"
R = 446.00'
T = 102.04'
L = 200.63'
E = 11.52'
e = 0.08%
PC STA = 14+54.66
PT STA = 16+55.30
SUPERELEVATION TRANSITION
STA 13+42.66 TO 15+10.66
FULL S.E. = 15+10.66 TO 15+95.72
STA 15+95.72 TO 17+74.42

EX CURVE C1
PI STA = 3+35.26
Δ = 09°50'28" (LT)
D = 01°28'17"
R = 3894.23'
T = 335.26'
L = 668.88'
E = 14.41'
PC STA = 0+00.00
PT STA = 6+68.88

EX CURVE C2
PI STA = 9+11.83
Δ = 38°47'40" (RT)
D = 08°18'13"
R = 690.00'
T = 242.95'
L = 467.19'
E = 41.52'
e = 0.083%
PC STA = 6+68.88
PT STA = 11+36.07
SUPERELEVATION TRANSITION
STA 4+91.45 TO 6+65.45
FULL S.E. = 6+65.45 TO 10+74.14
STA 10+74.14 TO 12+48.14

EX CURVE C3
PI STA = 15+12.28
Δ = 28°44'39" (LT)
D = 12°50'48"
R = 446.00'
T = 114.28'
L = 223.75'
E = 14.41'
e = 0.08%
PC STA = 13+98.00
PT STA = 16+21.75
SUPERELEVATION TRANSITION
12+66.00 TO 14+54.00
FULL S.E. = 14+54.00 TO 15+63.38
15+63.38 TO 17+38.49

EX CURVE D1
PI STA = 3+72.13
Δ = 50°52'51" (LT)
D = 12°50'48"
R = 446.00'
T = 212.16'
L = 396.06'
E = 47.89'
e = 0.083%
PC STA = 1+59.97
PT STA = 5+56.03
SUPERELEVATION TRANSITION
STA 1+09.23 TO 2+83.23
FULL S.E. = 2+83.23 TO 4+98.03
STA 4+98.03 TO 6+72.03

EX CURVE D2
PI STA = 11+29.88
Δ = 48°36'09" (RT)
D = 08°18'13"
R = 690.00'
T = 311.56'
L = 585.31'
E = 67.08'
e = 0.083%
PC STA = 8+18.31
PT STA = 14+03.62
SUPERELEVATION TRANSITION
STA 7+02.31 TO 8+76.31
FULL S.E. = 8+76.31 TO 12+63.35
STA 12+63.35 TO 14+03.62

CURVE 14 (NORTH OF INTERCHANGE)
PI STA. = 782+48.82
Δ = 43°48'11" (LT)
D = 01°30'00"
R = 3819.93'
T = 1535.72'
L = 2920.37'
E = 297.14'
e = 1.7%
PC STA. = 767+13.10
PT STA. = 796+33.47

SUPERELEVATION TRANSITION
RUNOUT = 765+96.79 TO 766+57.79
FULL S.E. = 767+34.79
END FULL S.E. = 796+03.81
RUNOFF = 796+80.81 TO 797+41.81

*RAMP ALIGNMENTS ARE ALONG OUTSIDE EOP

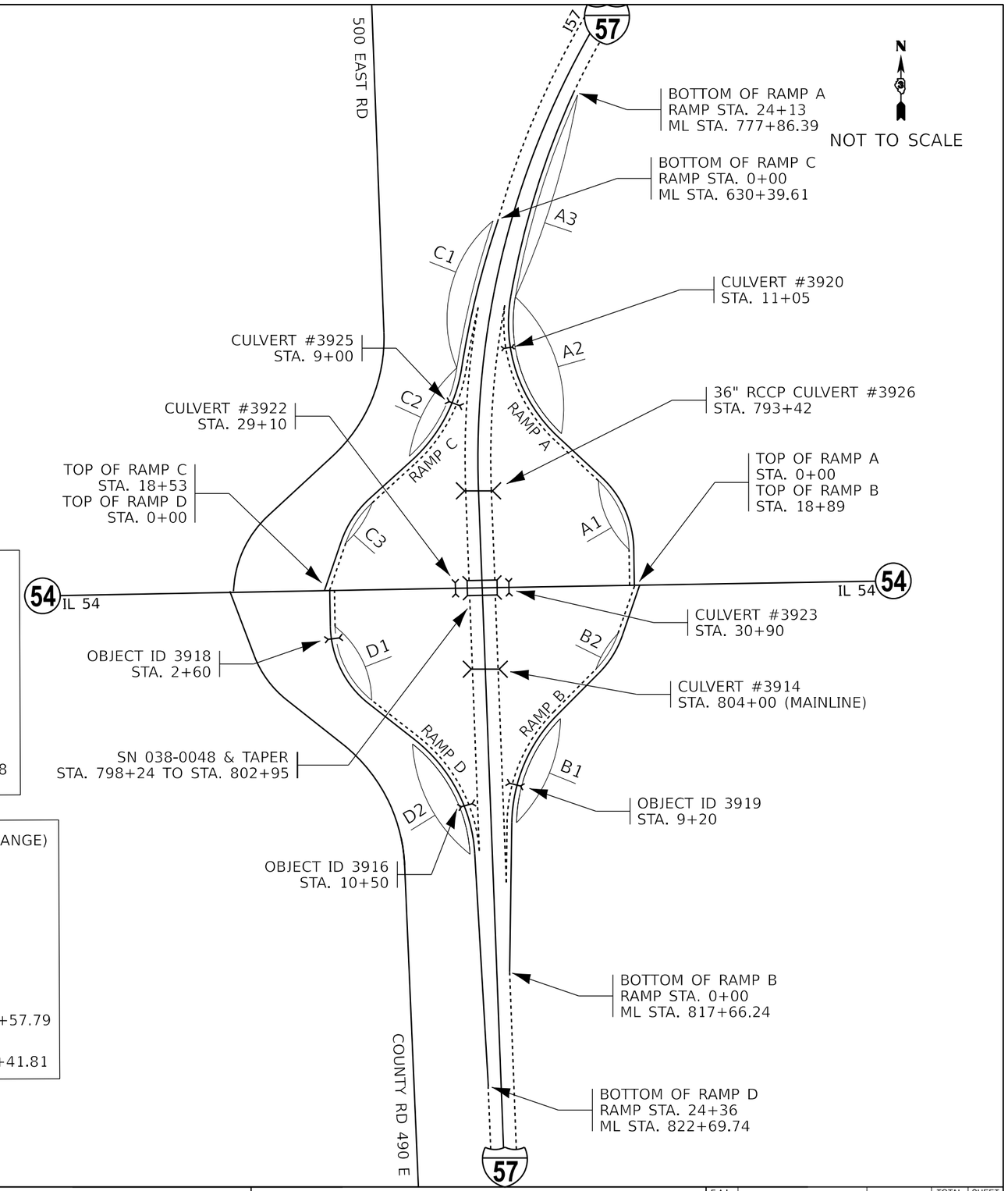


MODEL: Default
FILE NAME: pw://ildot-pw.bentley.com:PWIDOT/Documents/IDOT Offices/District 3/ORD Projects/D368H62/CADData/CADsheets/D368H62-line diagram

| | | | |
|---|---|---|---|
| USER NAME = Joshua.Ferguson | DESIGNED - | REVISED - | |
| | DRAWN - CODY J | REVISED - | |
| PLOT SCALE = 2500.000 ' / in. | CHECKED - | REVISED - | |
| PLOT DATE = 12/15/2023 | DATE - | REVISED - | |

**STATE OF ILLINOIS**
**DEPARTMENT OF TRANSPORTATION**

**LINE DIAGRAM**
**I-57 / IL-54 INTERCHANGE RAMPS**

SCALE: | SHEET 4 OF 4 SHEETS | STA. | TO STA.

| F.A.I. RTE. | SECTION | COUNTY | TOTAL SHEETS | SHEET NO. |
|---|---|---|---|---|
| 57 | (38-6,38-5)RS,BRR,CLV | IROQUOIS | 213 | 7 |
| | | CONTRACT NO. 66H62 | | |
| | | ILLINOIS FED. AID PROJECT | | |

| CODE NO. | ITEM | UNIT | TOTAL QUANTITY | CONSTR. CODE 90% FED 10% STATE ROADWAY 0005 RURAL |
|---|---|---|---|---|
| 20100110 | TREE REMOVAL (6 TO 15 UN ITS DIAMETER) | UNIT | 20 | 20 |
| 20100210 | TREE REMOVAL (OVER 15 UNITS DIAMETER) | UNIT | 20 | 20 |
| 20200100 | EARTH EXCAVATION | CU YD | 733.2 | 733.2 |
| 20400800 | FURNISHED EXCAVATION | CU YD | 1059.3 | 1059.3 |
| 20800150 | TRENCH BACKFILL | CU YD | 86.9 | 86.9 |
| 21400100 | GRADING AND SHAPING DITCHES | FOOT | 2590 | 2590 |
| 25000210 | SEEDING, CLASS 2A | ACRE | 0.75 | 0.75 |
| 25000400 | NITROGEN FERTILIZER NUTRIENT | POUND | 72 | 72 |
| 25000500 | PHOSPHORUS FERTILIZER NUTRIENT | POUND | 72 | 72 |
| 25000600 | POTASSIUM FERTILIZER NUTRIENT | POUND | 72 | 72 |
| 25100630 | EROSION CONTROL BLANKET | SQYD | 3316 | 3316 |
| 28100105 | STONE RIPRAP, CLASS A3 | SQYD | 1167 | 1167 |
| 28100107 | STONE RIPRAP, CLASS M | SQYD | 24 | 24 |
| 28200200 | FILTER FABRIC | SQYD | 1191 | 1191 |

| CODE NO. | ITEM | UNIT | TOTAL QUANTITY | CONSTR. CODE 90% FED 10% STATE ROADWAY 0005 RURAL |
|---|---|---|---|---|
| 30300112 | AGGREGATE SUBGRADE IMPROVEMENT 12" | SQYD | 11732 | 11732 |
| 31100300 | SUBBASE GRANULAR MATERIAL, TYPE A 4" | SQYD | 2432 | 2432 |
| 40600290 | BITUMINOUS MATERIALS (TACK COAT) | POUND | 265631 | 265631 |
| 40600370 | LONGITUDINAL JOINT SEALANT | FOOT | 257831 | 257831 |
| 40600372 | LONGITUDINAL JOINT SEALANT, HALF-WDTH | FOOT | 33680 | 33680 |
| 40600400 | MIXTURE FOR CRACKS, JOINTS, AND FLANGEWAYS | TON | 109 | 109 |
| 40600990 | TEMPORARY RAMP | SQYD | 546 | 546 |
| 40603200 | POLYMERIZED HOT-MIXASPHALT BINDER COURSE, IL-4.75, N50 | TON | 6575 | 6575 |
| 40603209 | POLYMERIZED HOT-MIXASPHALT BINDER COURSE, IL-9.5, N90 | TON | 11385 | 11385 |
| 40603235 | POLYMERIZED HOT-MIXASPHALT BINDER COURSE, IL-19.0, N70 | TON | 24966 | 24966 |
| 40603240 | POLYMERIZED HOT-MIXASPHALT BINDER COURSE, IL-19.0, N90 | TON | 13198 | 13198 |
| 40604162 | POLYMERIZED HOT-MIXASPHALT SURFACE COURSE, IL-9.5, MIX "D", N70 | TON | 14689 | 14689 |
| 40605034 | POLYMERIZED HOT-MIXASPHALT SURFACE COURSE, STONE MATRIX ASPHALT, 12.5, MIX"E", N80 | TON | 25628 | 25628 |
| 44000155 | HOT-MIXASPHALT SURFACE REMOVAL, 1 1/2" | SQYD | 29938 | 29938 |

| CODE NO. | ITEM | UNIT | TOTAL QUANTITY | CONSTR. CODE 90% FED 10% STATE ROADWAY 0005 RURAL |
|---|---|---|---|---|
| 44000157 | HOT-MIX ASPHALT SURFACE REMOVAL, 2" | SQ YD | 129108 | 129108 |
| 44000158 | HOT-MIX ASPHALT SURFACE REMOVAL, 2 1/4" | SQ YD | 29939 | 29939 |
| 44000162 | HOT-MIX ASPHALT SURFACE REMOVAL, 3 1/4" | SQ YD | 28359 | 28359 |
| 44000166 | HOT-MIX ASPHALT SURFACE REMOVAL, 4 1/4" | SQ YD | 106787 | 106787 |
| 44000167 | HOT-MIX ASPHALT SURFACE REMOVAL, 4 1/2" | SQ YD | 46340 | 46340 |
| 44000170 | HOT-MIX ASPHALT SURFACE REMOVAL, 5 1/4" | SQ YD | 46095 | 46095 |
| 44000182 | HOT-MIX ASPHALT SURFACE REMOVAL, 8" | SQ YD | 64429 | 64429 |
| 44004250 | PAVED SHOULDER REMOVAL | SQ YD | 1467 | 1467 |
| 44200583 | CLASS A PATCHES, TYPE IV, 12 INCH | SQ YD | 11732 | 11732 |
| 44200610 | CLASS A PATCHES, TYPE II, 13 INCH | SQ YD | 295 | 295 |
| 44200612 | CLASS A PATCHES, TYPE III, 13 INCH | SQ YD | 56 | 56 |
| 44200614 | CLASS A PATCHES, TYPE IV, 13 INCH | SQ YD | 267 | 267 |
| 44200630 | CLASS A PATCHES, TYPE II, 15 INCH | SQ YD | 254 | 254 |
| 44200631 | CLASS A PATCHES, TYPE III, 15 INCH | SQ YD | 32 | 32 |

| CODE NO. | ITEM | UNIT | TOTAL QUANTITY | CONSTR. CODE 90% FED 10% STATE ROADWAY 0005 RURAL |
|---|---|---|---|---|
| 44200632 | CLASS A PATCHES, TYPE IV, 15 INCH | SQYD | 321 | 321 |
| 44201423 | CLASS C PATCHES, TYPE I 16 INCH | SQYD | 6 | 6 |
| 44201769 | CLASS D PATCHES, TYPE III, 10 INCH | SQYD | 272 | 272 |
| 44213000 | PATCHING REINFORCEMENT | SQYD | 12955 | 12955 |
| 44213200 | SAW CUTS | FOOT | 16984 | 16984 |
| 44213202 | TIE BARS 1" | EACH | 1794 | 1794 |
| 44213204 | TIE BARS 3/4" | EACH | 3045 | 3045 |
| 48102100 | AGGREGATE VV£DGE SHOULDER, TYPE B | TON | 1046 | 1046 |
| 50104400 | CONCRETE HEADWALL REMOVAL | EACH | 7 | 7 |
| 50105220 | PIPE CULVERT REMOVAL | FOOT | 118 | 118 |
| 542D1909 | PIPE CULVERTS, CLASS D, TYPE 3 24" | FOOT | 108 | 108 |
| 54213465 | END SECTIONS 30" | EACH | 3 | 3 |
| 54213669 | PRECAST REINFORCED CONCRETE FLARED END SECTIONS 24" | EACH | 4 | 4 |
| 54213681 | PRECAST REINFORCED CONCRETE FLARED END SECTIONS 36" | EACH | 2 | 2 |

| CODE NO. | ITEM | UNIT | TOTAL QUANTITY | CONSTR. CODE 90% FED 10% STATE ROADWAY 0005 RURAL |
|---|---|---|---|---|
| 54260315 | TRAVERSABLE PIPE GRATE FOR CONCRETE END SECTION | FOOT | 60 | 60 |
| 54262724 | METAL FLARED END SECTIONS 24" | EACH | 2 | 2 |
| 54390230 | INSERTION CULVERT LINER 36" | FOOT | 354 | 354 |
| 60100060 | CONCRETE HEADWALLS FOR PIPE DRAINS | EACH | 19 | 19 |
| 60108100 | PIPE UNDERDRAINS 4" (SPECIAL) | FOOT | 480 | 480 |
| 60108501 | PIPE UNDERDRAINS, TYPE 3 | FOOT | 8800 | 8800 |
| 60500060 | REMOVING INLETS | EACH | 18 | 18 |
| 60500090 | REMOVING INLETS TO MAINTAIN FLOW | EACH | 2 | 2 |
| 60920024 | PIPE CULVERTS TO BE CLEAN ED 24" | FOOT | 66 | 66 |
| 63500105 | DELINEATORS | EACH | 567 | 567 |
| 64200116 | SHOULDER RUMBLE STRIPS, 16 INCH | FOOT | 65328 | 65328 |
| * 66900200 | NON-SPECIAL WASTE DISPOSAL | CU YD | 739 | 739 |
| * 66900530 | SOIL DISPOSAL ANALYSIS | EACH | 4 | 4 |
| * 66901001 | REGULATED SUBSTANCES PRE-CONSTRUCTION PLAN | LSUM | 1 | 1 |

*= SPECIALTY ITEM

MODEL: Default
FILE NAME: c:\pw_work\pwidot\cody.m.johnson@illinois.gov\d0874886\66H62-SOQ.dgn

| | | | |
|---|---|---|---|
| USER NAME = Cody.M.Johnson | DESIGNED - | REVISED - | |
| | DRAWN - | REVISED - | |
| PLOT SCALE = 100.000' / in. | CHECKED - | REVISED - | |
| PLOT DATE = 12/15/2023 | DATE - | REVISED - | |

STATE OF ILLINOIS
DEPARTMENT OF TRANSPORTATION

SUMMARY OF QUANTITIES

SCALE: | SHEET 5 OF 10 SHEETS | STA. TO STA.

| F.A.I. RTE. | SECTION | COUNTY | TOTAL SHEETS | SHEET NO. |
|---|---|---|---|---|
| 57 | (38-6,38-S)RS,BRR,CLV | IROQUOIS | 213 | 12 |

CONTRACT NO. 66H62

ILLINOIS FED. AID PROJECT

REV. 1/22/24 REV. 1/9/24 REV. 1/8/24

| | CODE NO. | ITEM | UNIT | TOTAL QUANTITY | CONSTR. CODE 90% FED 10% STATE ROADWAY 0005 RURAL |
|---|---|---|---|---|---|
| * | 66901003 | REGULATED SUBSTANCES FINAL CONSTRUCTION REPORT | LSUM | 1 | 1 |
| * | 66901006 | REGULATED SUBSTANCES MONITORING | CAL DA | 8 | 8 |
| | 67000400 | ENGINEER'S FIELD OFFICE, TYPE A | CAL MO | 12 | 12 |
| | 67100100 | MOBILIZATION | LSUM | 1 | 1 |
| | 70100205 | TRAFFIC CONTROL AND PROTECTION, STANDARD 701401 | EACH | 1 | 1 |
| | 70100420 | TRAFFIC CONTROL AND PROTECTION, STANDARD 701411 | EACH | 8 | 8 |
| | 70100825 | TRAFFIC CONTROL AND PROTECTION, STANDARD 701456 | LSUM | 1 | 1 |
| | 70103815 | TRAFFIC CONTROL SURVEILLANCE | CAL DA | 140 | 140 |
| | 70107025 | CHANGEABLE MESSAGE SIGN | CAL DA | 1176 | 1176 |
| | 70300100 | SHORT TERM PAVEMENT MARKING | FOOT | 170470 | 170470 |
| | 70300150 | SHORTTERM PAVEMENT MARKING REMOVAL | SOFT | 851986 | 851986 |
| | 70307120 | TEMPORARY PAVEMENT MARKING - LINE 4" - TYPE IV TAPE | FOOT | 265053 | 265053 |
| | 70400100 | TEMPORARY CONCRETE BARRIER | FOOT | 5325 | 5325 |
| | 70400200 | RELOCATE TEMPORARY CONCRETE BARRIER | FOOT | 5325 | 5325 |

*= SPECIALTY ITEM

MODEL: Default
FILE NAME: c:\pw_work\pwidot\cody.m.johnson@illinois.gov\d0874886\66H62-SOQ.dgn

| | | | |
|---|---|---|---|
| USER NAME = Cody.M.Johnson | DESIGNED - | REVISED - | STATE OF ILLINOIS DEPARTMENT OF TRANSPORTATION |
| | DRAWN - | REVISED - | |
| PLOT SCALE = 100.000' / in. | CHECKED - | REVISED - | |
| PLOT DATE = 12/15/2023 | DATE - | REVISED - | |

SUMMARY OF QUANTITIES

SCALE: | SHEET 6 OF 10 SHEETS | STA TO STA.

| F.A.I. RTE. | SECTION | COUNTY | TOTAL SHEETS | SHEET NO. |
|---|---|---|---|---|
| 57 | (38-6,38-S)RS,BRR,CLV | IROQUOIS | 213 | 13 |

CONTRACT NO. 66H62

ILLINOIS FED. AID PROJECT

REV. 1/22/24 REV. 1/9/24 REV. 1/8/24

| | CODE NO. | ITEM | UNIT | TOTAL QUANTITY | CONSTR. CODE 90% FED 10% STATE ROADWAY 0005 RURAL |
|---|---|---|---|---|---|
| | 70600250 | IMPACT ATTENUATORS, TEMPORARY (NON- REDIRECTIVE), TEST LEVEL 3 | EACH | 4 | 4 |
| | 70600350 | IMPACT ATTENUATORS, RELOCATE (NON- REDIRECTIVE), TEST LEVEL 3 | EACH | 4 | 4 |
| * | 72000300 | SIGN PANEL - TYPE 3 | SQ FT | 2332 | 2332 |
| * | 72400100 | REMOVE SIGN PANEL ASSEMBLY - TYPE A | EACH | 14 | 14 |
| * | 72400330 | REMOVE SIGN PANEL - TYPE 3 | SQ FT | 2245 | 2245 |
| * | 72700100 | STRUCTURAL STEEL SIGN SUPPORT - BREAKAWAY | POUND | 25611 | 25611 |
| * | 72800100 | TELESCOPING STEEL SIGN SUPPORT | FOOT | 210 | 210 |
| | 73700100 | REMOVE GROUND MOUNTED SIGN SUPPORT | EACH | 12 | 12 |
| | 73700200 | REMOVE CONCRETE FOUNDATION - GROUND MOUNT | EACH | 12 | 12 |
| * | 78000600 | THERMOPLASTIC PAVEMENT MARKING - LINE 12" | FOOT | 1063 | 1063 |
| * | 78000650 | THERMOPLASTIC PAVEMENT MARKING - LINE 24" | FOOT | 204 | 204 |
| * | 78004600 | PREFORMED PLASTIC PAVEMENT MARKING, TYPE D - STANDARD - LETTERS AND SYMBOLS | SQ FT | 222 | 222 |
| * | 78004620 | PREFORMED PLASTIC PAVEMENT MARKING, TYPE D - STANDARD - LINE 4" | FOOT | 20146 | 20146 |
| * | 78004640 | PREFORMED PLASTIC PAVEMENT MARKING, TYPE D - STANDARD - LINE 8" | FOOT | 28283 | 28283 |

*= SPECIALTY ITEM

| | CODE NO. | ITEM | UNIT | TOTAL QUANTITY | CONSTR. CODE 90% FED 10% STATE ROADWAY 0005 RURAL |
|---|---|---|---|---|---|
| * | 78005110 | EPOXY PAVEMENT MARKING - LINE 4" | FOOT | 281180 | 281180 |
| * | 78011000 | GROOVING FOR RECESSED PAVEMENT MARKING, LETTERS AND SYMBOLS | SQ FT | 222 | 222 |
| * | 78011025 | GROOVING FOR RECESSED PAVEMENT MARKING 5" | FOOT | 299592 | 299592 |
| * | 78011045 | GROOVING FOR RECESSED PAVEMENT MARKING 9" | FOOT | 27869 | 27869 |
| * | 78011065 | GROOVING FOR RECESSED PAVEMENT MARKING 13" | FOOT | 732 | 732 |
| * | 78011125 | GROOVING FOR RECESSED PAVEMENT MARKING 25" | FOOT | 204 | 204 |
| * | 78100100 | RAISED REFLECTIVE PAVEMENT MARKER | EACH | 1486 | 1486 |
| * | 78200011 | BARRIER WALL REFLECTORS, TYPE C | EACH | 428 | 428 |
| | 78300200 | RAISED REFLECTIVE PAVEMENT MARKER REMOVAL | EACH | 1044 | 1044 |
| * | X0326208 | ALTERNATE ROUTE SIGNING | L SUM | 1 | 1 |
| * | X0328004 | REAL-TIME TRAFFIC CONTROL SENSOR UNIT | WEEK | 280 | 280 |
| | X1200207 | REMOVE AND RELAY PIPE CULVERTS (SPECIAL) | FOOT | 74 | 74 |
| | X2700001 | TEMPORARY RUMBLE STRIPS (SPECIAL) | EACH | 4 | 4 |
| | X4400500 | COMBINATION CURB AND GUTTER REMOVAL (SPECIAL) | FOOT | 308 | 308 |

*= SPECIALTY ITEM

| | CODE NO. | ITEM | UNIT | TOTAL QUANTITY | CONSTR. CODE 90% FED 10% STATE ROADWAY 0005 RURAL |
|---|---|---|---|---|---|
| | X4401198 | HOT-MIX ASPHALT SURFACE REMOVAL, VARIABLE DEPTH | SQ YD | 3284 | 3284 |
| | X4405020 | LONGITUDINAL PARTIAL DEPTH REMOVAL 2" | FOOT | 5416 | 5416 |
| | X4420900 | LONGITUDINAL PARTIAL DEPTH PATCHING | TON | 135 | 135 |
| | X6015000 | REMOVE CONCRETE HEADWALLS FOR PIPE DRAINS | EACH | 12 | 12 |
| | X6350120 | DELINEATOR REMOVAL | EACH | 659 | 659 |
| | X6350204 | LINEAR DELINEATOR PANELS, 4 INCH | EACH | 36 | 36 |
| | X6350206 | LINEAR DELINEATOR PANELS, 6 INCH | EACH | 60 | 60 |
| | X7010208 | TRAFFIC CONTROL AND PROTECTION, STANDARD 701402 (SPECIAL) | EACH | 1 | 1 |
| | X7010237 | CHANGEABLE MESSAGE SIGN (SPECIAL) | CAL DA | 2744 | 2744 |
| * | X7260100 | MILE POST MARKER ASSEMBLY (SPECIAL) | EACH | 14 | 14 |
| * | X8570002 | SMART TRAFFIC MONITORING SYSTEM | CAL WK | 56 | 56 |
| | X8570004 | SMART TRAFFIC MONITORING DEVICE | CAL WK | 280 | 280 |
| | Z0013798 | CONSTRUCTION LAYOUT | L SUM | 1 | 1 |
| | Z0034105 | MATERIAL TRANSFER DEVICE | TON | 56786 | 56786 |
| Ø | Z0076600 | TRAINEES | HOUR | 2,000 | 2,000 |
| | Z0040530 | PIPE UNDERDRAIN REMOVAL | FOOT | 320 | 320 |
| Ø | Z0076604 | TRAINEES - TRAINING PROGRAM GRADUATE | HOUR | 2,000 | 2,000 |
| | Z0048665 | RAILROAD PROTECTIVE LIABILITY INSURANCE | L SUM | 1 | 1 |

*= SPECIALTY ITEM Ø 0042

MODEL: Default
FILE NAME: c:\pw_work\pwidot\zapark\d0874886\66H62-SOQ.dgn

| | | | |
|---|---|---|---|
| USER NAME = stephenie.carmin | DESIGNED - | REVISED - | |
| | DRAWN - | REVISED - | |
| PLOT SCALE = 100.000 ' / in. | CHECKED - | REVISED - | |
| PLOT DATE = 12/19/2023 | DATE - | REVISED - | |

**STATE OF ILLINOIS**
**DEPARTMENT OF TRANSPORTATION**

**SUMMARY OF QUANTITIES**

SCALE: | SHEET 9 OF 10 SHEETS | STA. | TO STA.

| F.A.I. RTE. | SECTION | COUNTY | TOTAL SHEETS | SHEET NO. |
|---|---|---|---|---|
| 57 | (38-6,38-5)RS,BRR,CLV | IROQUOIS | 213 | 16 |

CONTRACT NO. 66H62

ILLINOIS | FED. AID PROJECT

REV. 1/22/24 REV. 1/9/24 REV. 1/8/24

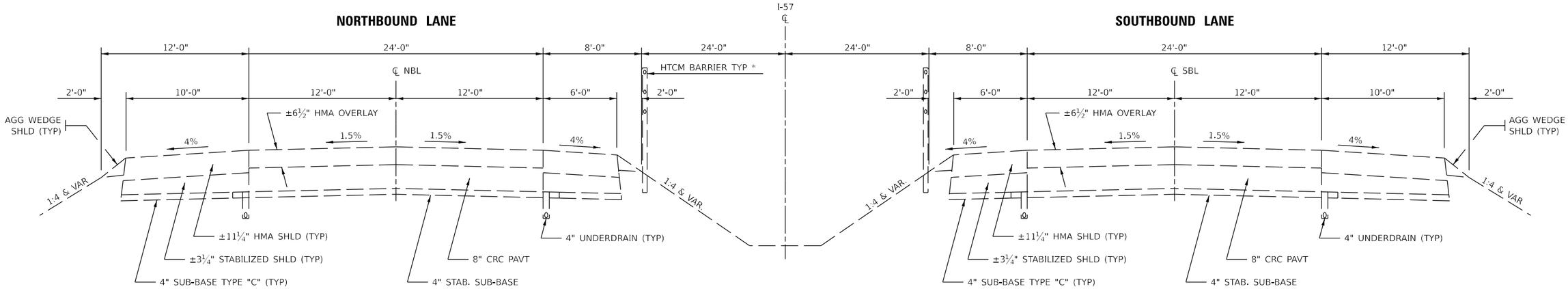


## EXISTING TYPICAL SECTION 1

STA. 520+00 TO STA 585+64
STA 612+80 TO STA 740+50
(LOOKING SOUTH)

* HIGH TENSION CABLE MEDIAN BARRIER LOCATIONS
SOUTHBOUND LANES
STA 520+00 TO STA 573+50
STA 574+25 TO STA 579+00

NORTHBOUND LANES
STA 523+00 TO STA 573+50
STA 574+20 TO STA 584+15
STA 866+75 TO STA 910+80

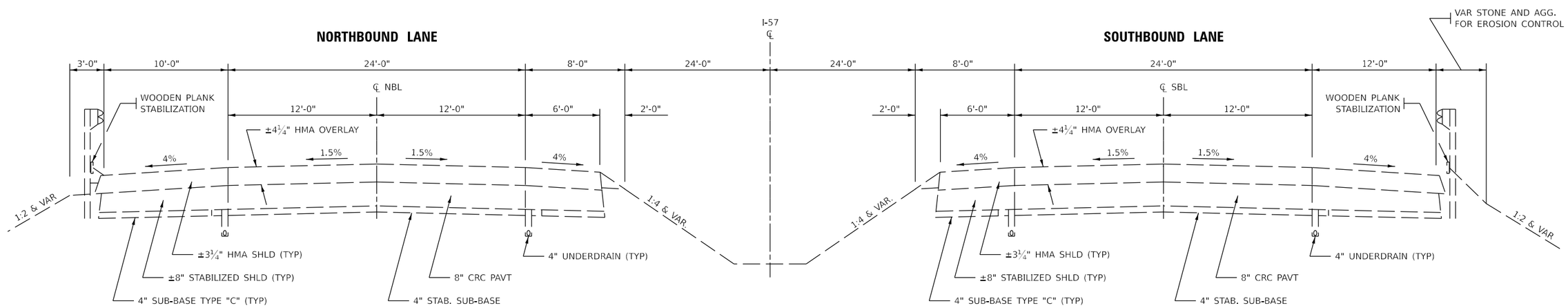


## EXISTING TYPICAL SECTION 2

STA. STA 585+64 TO STA 612+80
(LOOKING SOUTH)

MODEL: Default
FILE NAME: pw://bikow.bentley.com:PWIDOT/Documents/IDOT Offices/District 3/ORD Projects/D396H62/CADData/CADsheets/D396H62-typicals

| | | | |
|---|---|---|---|
| USER NAME = Joseph.Zagar | DESIGNED - | REVISED - | |
| | DRAWN - | REVISED - | |
| PLOT SCALE = 100,000 ' / in. | CHECKED - | REVISED - | |
| PLOT DATE = 12/15/2023 | DATE - | REVISED - | |

**STATE OF ILLINOIS**
**DEPARTMENT OF TRANSPORTATION**

**EXISTING I-57 TYPICAL SECTIONS**

SCALE: | SHEET 1 OF 8 SHEETS | STA. | TO STA.

| F.A.I. RTE. | SECTION | COUNTY | TOTAL SHEETS | SHEET NO. |
|---|---|---|---|---|
| 57 | (38-6,38-5)RS,BRR,CLV | IROQUOIS | 213 | 17 |
| | | CONTRACT NO. 66H62 | | |
| | ILLINOIS | FED. AID PROJECT | | |

Long Section Number

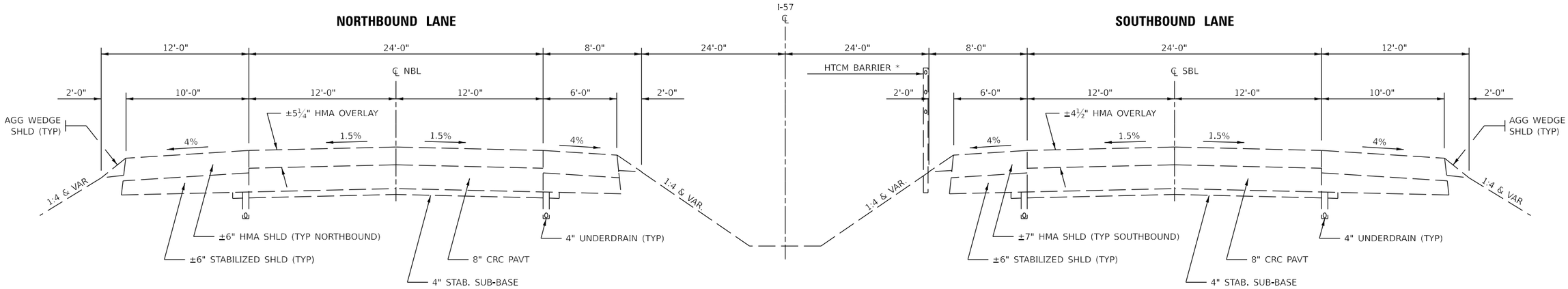


## EXISTING TYPICAL SECTION 3

STA 740+50 TO STA 910+80
(LOOKING SOUTH)

* HIGH TENSION CABLE MEDIAN BARRIER LOCATIONS
SOUTHBOUND LANES
STA 520+00 TO STA 573+50
STA 574+25 TO STA 579+00

NORTHBOUND LANES
STA 523+00 TO STA 573+50
STA 574+20 TO STA 584+15
STA 866+75 TO STA 910+80

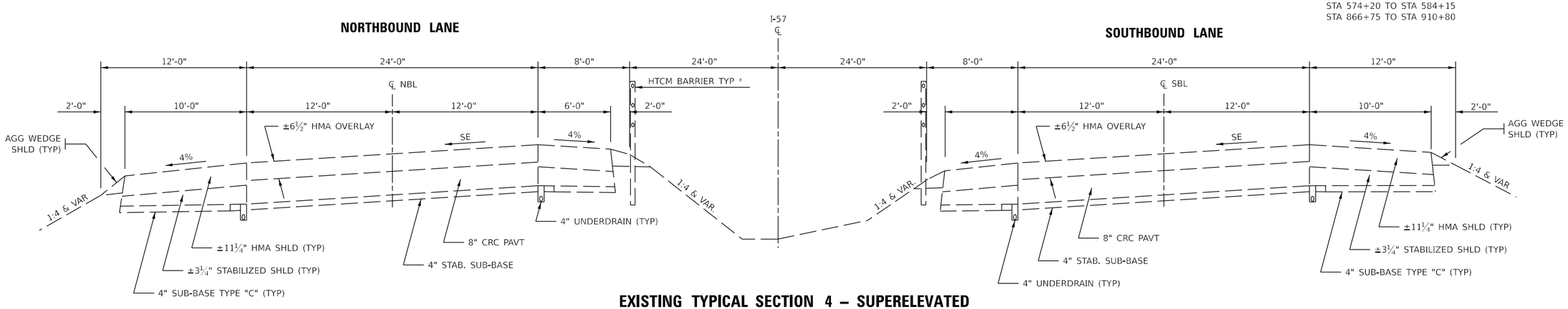


## EXISTING TYPICAL SECTION 4 – SUPERELEVATED
## (LOOKING SOUTH /LEFT HAND CURVE SHOWN)

### CURVE 12 – PI STA 537+90.50

PC STA 522+82.94
PT STA 551+50.99
S.E. = 1.7% (LEFT)
R = 3820.84'

### CURVE 13 – PI STA 691+71.02

PC STA. 669+12.99
PT STA. 712+14.90
S.E. = 1% (RIGHT)
R = 5729.96'

### CURVE 14 – PI STA 782+45.05

PC STA. 767+09.33
PT STA 796+29.70
S.E. = 1.7% (LEFT)
R = 3819.93'

### CURVE 15 – PI STA 889+11.03

PC STA. 871+21.08
PT STA 905+90.94
S.E. = 2.8% (RIGHT)
R = 5730.70'

MODEL: Default
FILE NAME: pw://ildot-pw.bentley.com:PWIDOT/Documents/IDOT Offices/District 3/ORD Projects/D386H62/CADData/CADsheets/D386H62Typicals

| | | | |
|---|---|---|---|
| USER NAME = Joseph.Zagar | DESIGNED - | REVISED - | |
| | DRAWN - | REVISED - | |
| PLOT SCALE = 100,000 ' / in. | CHECKED - | REVISED - | |
| PLOT DATE = 12/15/2023 | DATE - | REVISED - | |

**STATE OF ILLINOIS**
**DEPARTMENT OF TRANSPORTATION**

**EXISTING I-57 TYPICAL SECTIONS**

SCALE: | SHEET 2 OF 8 SHEETS | STA. | TO STA.

| F.A.I. RTE. | SECTION | COUNTY | TOTAL SHEETS | SHEET NO. |
|---|---|---|---|---|
| 57 | (38-6,38-5)RS,BRR,CLV | IROQUOIS | 213 | 18 |
| | | CONTRACT NO. 66H62 | | |
| | | ILLINOIS FED. AID PROJECT | | |

Long Section Number

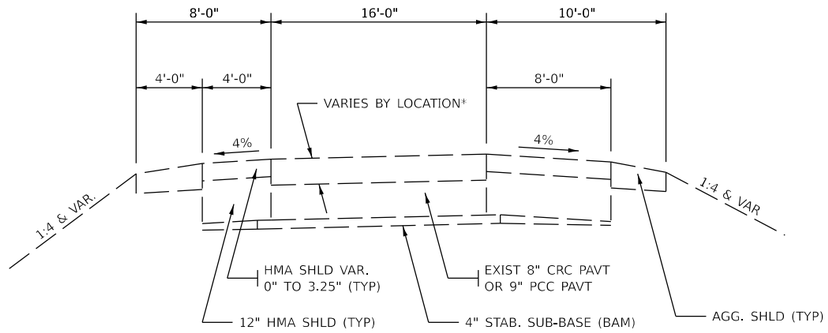


## EXISTING TYPICAL SECTION 5

RAMPS AT US-24 INTERCHANGE

* RAMP A
STA 0+23 TO STA 1+09 ±2½" HMA
STA 1+09 TO STA 11+85 ±3¼" HMA
STA 11+85 TO STA 23+19 ±6½" HMA

* RAMP B
STA 0+00 TO STA 7+12 ±6½" HMA
STA 7+12 TO STA 18+04 ±3¼" HMA
STA 18+04 TO STA 18+93 ±2½" HMA

* RAMP C
STA 0+00 TO STA 7+12 ±6½" HMA
STA 7+12 TO STA 18+04 ±3¼" HMA
STA 18+04 TO STA 18+93 ±2½" HMA

* RAMP D
STA 0+23 TO STA 1+09 ±2½" HMA
STA 1+09 TO STA 11+82 ±3¼" HMA
STA 11+82 TO STA 23+15 ±6½" HMA

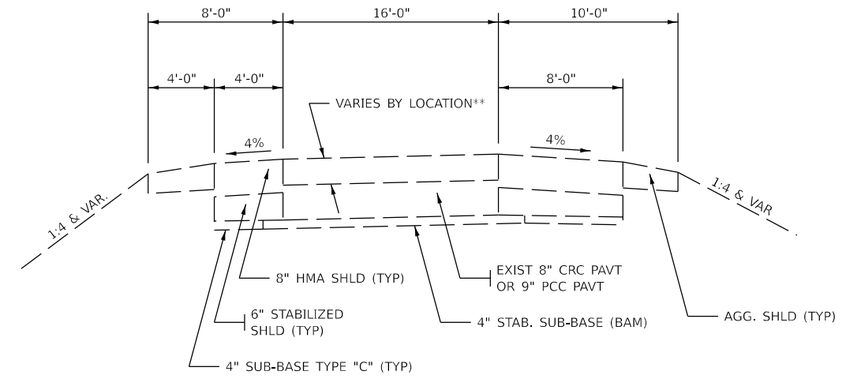


## EXISTING TYPICAL SECTION 6

RAMPS AT IL-54 INTERCHANGE

** RAMP A
STA 0+23 TO STA 1+35 ±2½ to ±5¾" HMA
STA 1+35 TO STA 13+95 ±3¼" HMA
STA 13+95 TO STA 14+69 ±3¼" to ±5" HMA
STA 14+69 TO STA 24+13 ±5" HMA

** RAMP B
STA 18+66 TO STA 17+47 ±2½ to ±5¾" HMA
STA 17+47 TO STA 6+00 ±3¼" HMA
STA 6+00 TO STA 5+30 ±3¼" to ±5" HMA
STA 5+30 TO STA 0+00 ±5" HMA

** RAMP C
STA 18+29 TO STA 17+10 ±2½ to ±5¾" HMA
STA 17+10 TO STA 6+01 ±3¼" HMA
STA 6+01 TO STA 5+31 ±3¼" to ±5" HMA
STA 5+31 TO STA 0+00 ±5" HMA

** RAMP D
STA 0+23 TO STA 1+35 ±2½ to ±5¾" HMA
STA 1+35 TO STA 13+30 ±3¼" HMA
STA 13+30 TO STA 14+04 ±3¼" to ±5" HMA
STA 14+04 TO STA 24+36 ±5" HMA

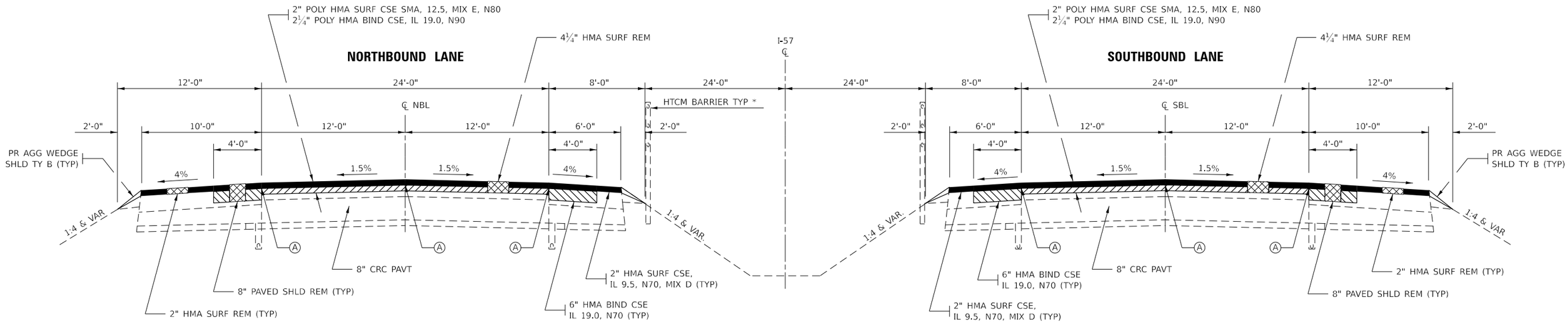


## PROPOSED TYPICAL SECTION 1

STA. 520+00 TO STA 585+64
STA 612+80 TO STA 740+50
(LOOKING SOUTH)

Ⓐ LONGITUDINAL JOINT SEALANT

* EXISTING HIGH TENSION CABLE MEDIAN BARRIER LOCATIONS
SOUTHBOUND LANES
STA 520+00 TO STA 573+50
STA 574+25 TO STA 579+00

NORTHBOUND LANES
STA 523+00 TO STA 573+50
STA 574+20 TO STA 584+15
STA 866+75 TO STA 910+80

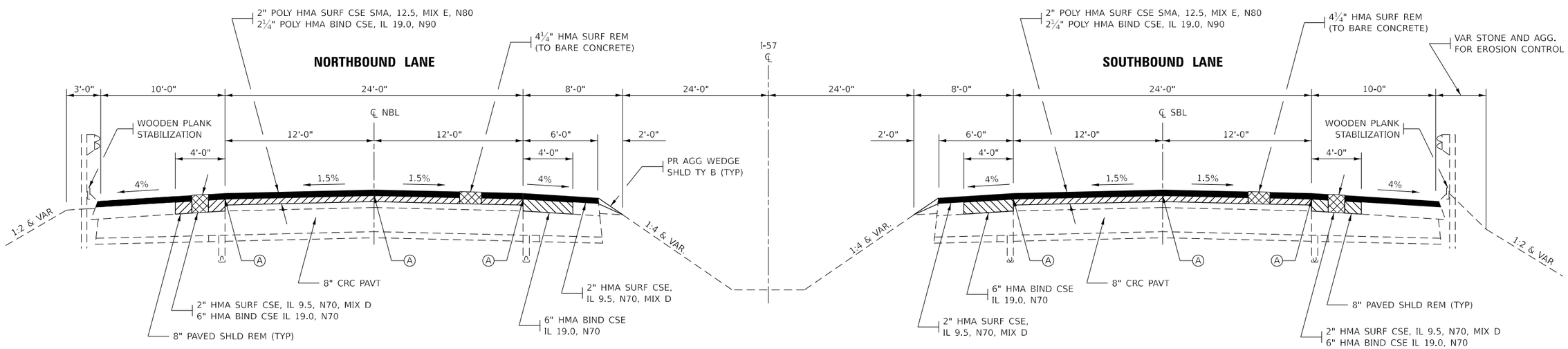


## PROPOSED TYPICAL SECTION 2

STA. STA 585+64 TO STA 612+80
(LOOKING SOUTH)

MODEL: Default
FILE NAME: pw://ildot-pw.bentley.com:PWIDOT/Documents/IDOT Offices/District 3/ORD Projects/D366H62/CADData/CADsheets/D366H62-typicals

| | | | |
|---|---|---|---|
| USER NAME = Joshua.Ferguson | DESIGNED - | REVISED - | STATE OF ILLINOIS DEPARTMENT OF TRANSPORTATION |
| | DRAWN - | REVISED - | |
| PLOT SCALE = 100.000 ' / in. | CHECKED - | REVISED - | |
| PLOT DATE = 12/18/2023 | DATE - | REVISED - | |

**PROPOSED I-57 TYPICAL SECTIONS**

SCALE: SHEET 4 OF 8 SHEETS STA. TO STA.

| F.A.I. RTE. | SECTION | COUNTY | TOTAL SHEETS | SHEET NO. |
|---|---|---|---|---|
| 57 | (38-6,38-5)RS,BRR,CLV | IROQUOIS | 213 | 20 |
| | | CONTRACT NO. 66H62 | | |
| | | ILLINOIS FED. AID PROJECT | | |

Long Section Number

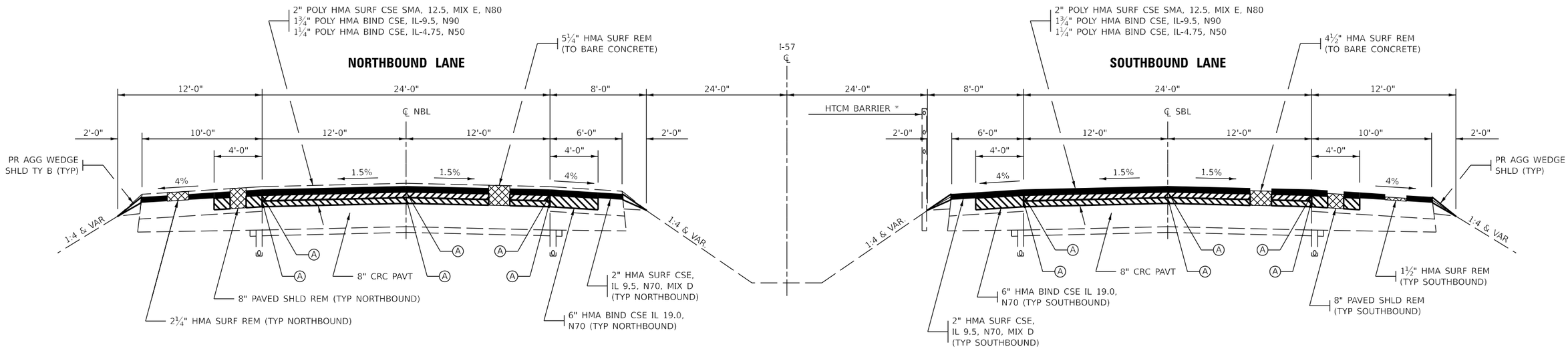


## PROPOSED TYPICAL SECTION 3

STA. 740+50 TO STA 910+80
(LOOKING SOUTH)

* EXISTING HIGH TENSION CABLE MEDIAN BARRIER LOCATIONS
SOUTHBOUND LANES
STA 520+00 TO STA 573+50
STA 574+25 TO STA 579+00

NORTHBOUND LANES
STA 523+00 TO STA 573+50
STA 574+20 TO STA 584+15
STA 866+75 TO STA 910+80

Ⓐ LONGITUDINAL JOINT SEALANT

MODEL: Default
FILE NAME: pw://idot-pw.bentley.com:PWIDOT/Documents/IDOT Offices/District 3/ORD Projects/D366H62/CADData/CADsheets/D366H62-typicals

| | | | |
|---|---|---|---|
| USER NAME = Joseph.Zagar | DESIGNED - | REVISED - | STATE OF ILLINOIS DEPARTMENT OF TRANSPORTATION |
| | DRAWN - | REVISED - | |
| PLOT SCALE = 100.000 ' / in. | CHECKED - | REVISED - | |
| PLOT DATE = 12/15/2023 | DATE - | REVISED - | |

**PROPOSED I-57 TYPICAL SECTIONS**

SCALE: | SHEET 5 OF 8 SHEETS | STA. | TO STA.

| F.A.I. RTE. | SECTION | COUNTY | TOTAL SHEETS | SHEET NO. |
|---|---|---|---|---|
| 57 | (38-6,38-5)RS,BRR,CLV | IROQUOIS | 213 | 21 |
| | | CONTRACT NO. 66H62 | | |
| | | ILLINOIS FED. AID PROJECT | | |

Long Section Number

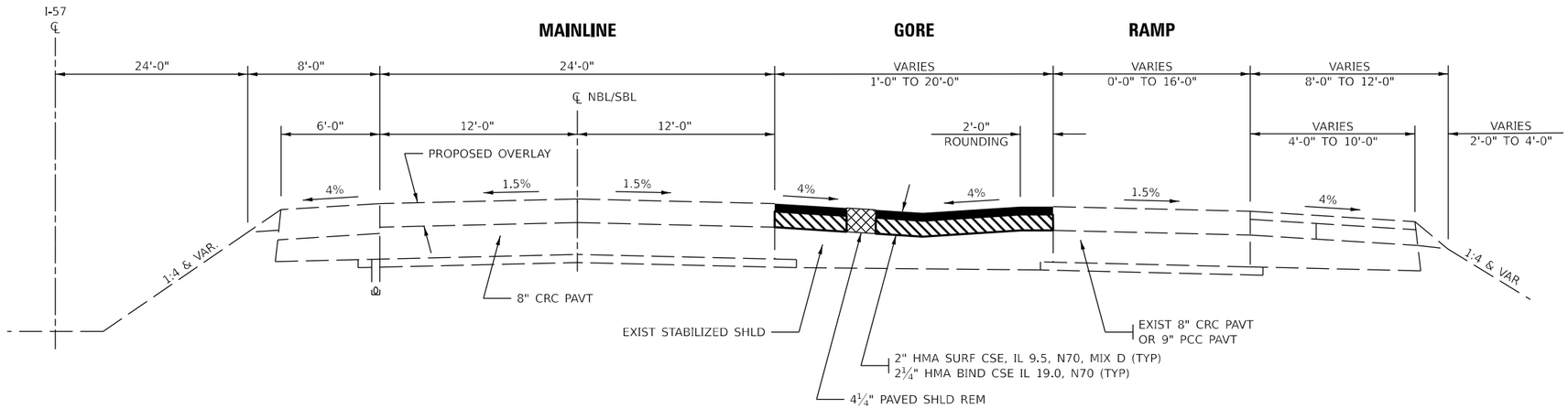


## PROPOSED TYPICAL SECTION 4

GORE POINT

US-24 (GILMAN) INTERCHANGE
RAMP A - STA 633+49 TO STA 635+80
RAMP B - STA 657+81 TO STA 661+47
RAMP C - STA 633+25 TO STA 636+83
RAMP D - STA 658+82 TO STA 661+09

IL-54 (ONARGA) INTERCHANGE
RAMP A* - STA 785+46 TO STA 787+47
RAMP B* - STA 811+16 TO STA 814+82
RAMP C - STA 787+15 TO STA 790+72
RAMP D - STA 811+62 TO STA 815+20

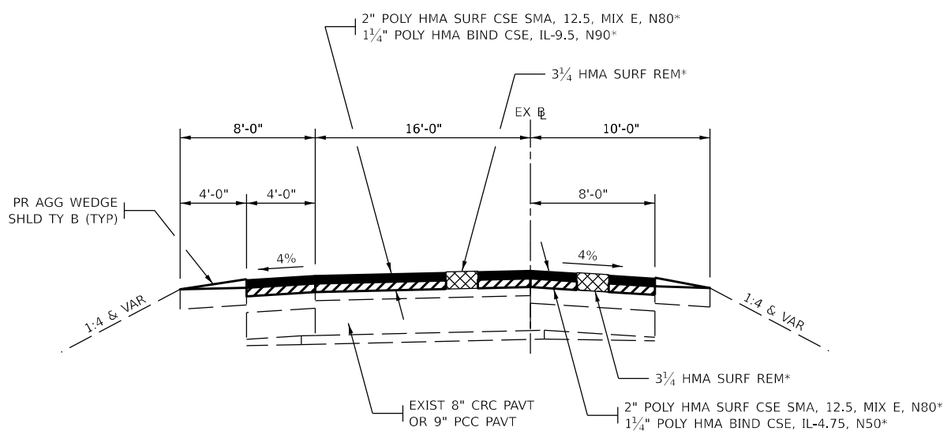


## PROPOSED TYPICAL SECTION 5

US-24 (GILMAN) INTERCHANGE
RAMP A STA 1+46 TO 12+64
RAMP B STA 17+60 TO 7+20
RAMP C STA 17+67 TO 7+13
RAMP D STA 1+47 TO 12+56

* SEE DETAILS FOR RESURFACING STATIONING

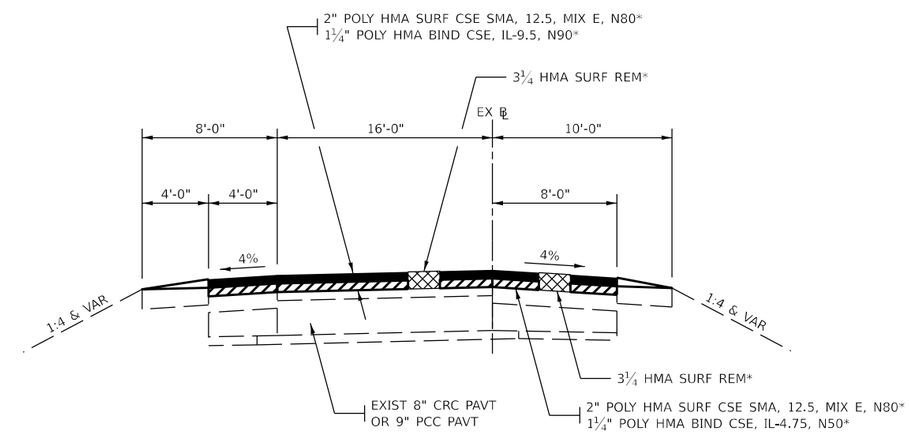


## PROPOSED TYPICAL SECTION 6

IL-54 (ONARGA) INTERCHANGE
RAMP A STA 1+15 TO 13+95
RAMP B STA 17+55 TO 6+00
RAMP C STA 17+53 TO 6+01
RAMP D STA 1+23 TO 13+30

MODEL: Default
FILE NAME: pw://ildot-pw.bentley.com:PWIDOT/Documents/IDOT Offices/District 3/ORD Projects/D366H62/CADData/CADsheets/D366H62-typicals

| | | | |
|---|---|---|---|
| USER NAME = Joseph.Zagar | DESIGNED - | REVISED - | STATE OF ILLINOIS DEPARTMENT OF TRANSPORTATION |
| | DRAWN - | REVISED - | |
| PLOT SCALE = 100,000 ' / in. | CHECKED - | REVISED - | |
| PLOT DATE = 1/4/2024 | DATE - | REVISED - | |

**PROPOSED I-57 TYPICAL SECTIONS**

SCALE: | SHEET 6 OF 8 SHEETS | STA. | TO STA.

| F.A.I. RTE. | SECTION | COUNTY | TOTAL SHEETS | SHEET NO. |
|---|---|---|---|---|
| 57 | (38-6,38-5)RS,BRR,CLV | IROQUOIS | 213 | 22 |
| | | CONTRACT NO. 66H62 | | |
| | | ILLINOIS FED. AID PROJECT | | |

Long Section Number

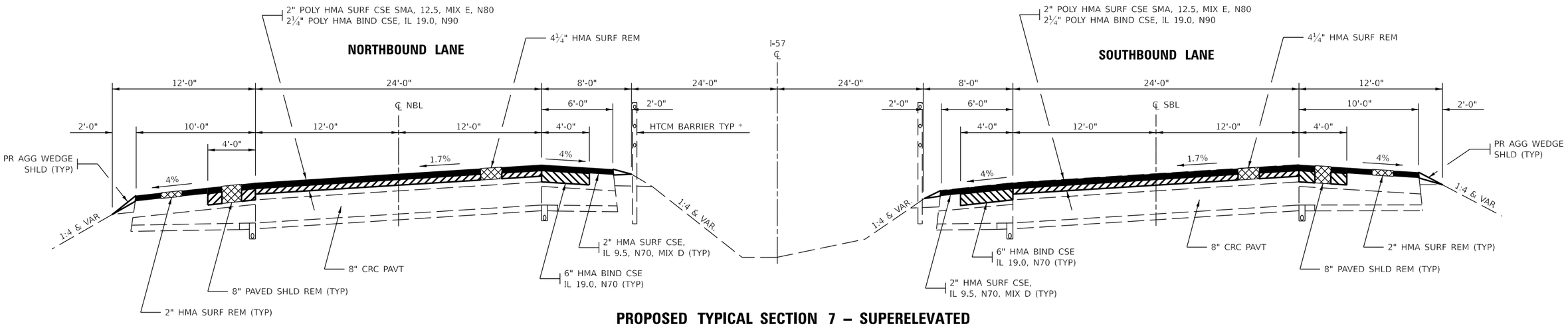


## PROPOSED TYPICAL SECTION 7 – SUPERELEVATED
## (LOOKING SOUTH /LEFT HAND CURVE SHOWN)

CURVE 12 - P.I. STA. 537+87.18
PC STA 522+79.62
PT STA 551+51.36

* EXISTING HIGH TENSION CABLE MEDIAN BARRIER LOCATIONS
SOUTHBOUND LANES
STA 520+00 TO STA 573+50
STA 574+25 TO STA 579+00

NORTHBOUND LANES
STA 523+00 TO STA 573+50
STA 574+20 TO STA 584+15
STA 866+75 TO STA 910+80

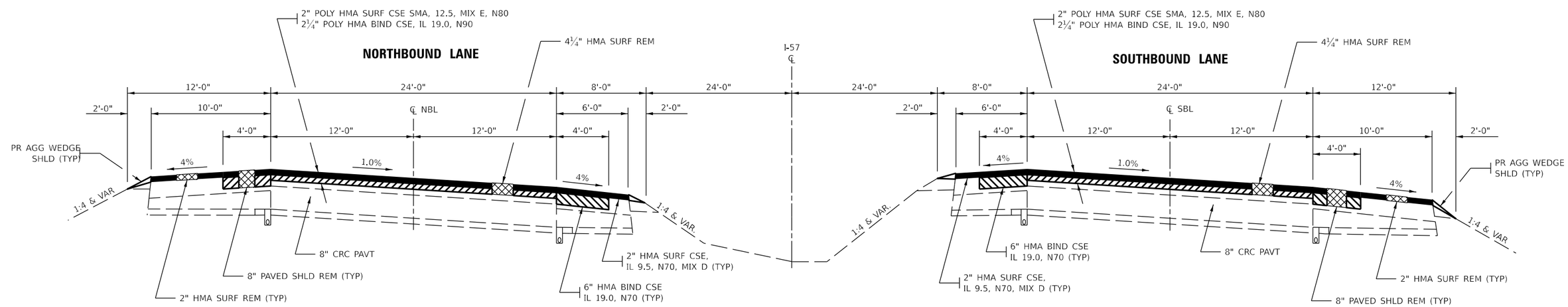


## PROPOSED TYPICAL SECTION 8 – SUPERELEVATED
## (LOOKING SOUTH /RIGHT HAND CURVE SHOWN)

CURVE 13 - P.I. STA. 691+70.81
PC STA 699+12.78
PT STA 712+14.67

MODEL: Default
FILE NAME: pw://ildot-pw.bentley.com:PWIDOT/Documents/IDOT Offices/District 3/ORD Projects/D366H62/CADData/CADsheets/D366H62-typicals

| | | | |
|---|---|---|---|
| USER NAME = Joseph.Zagar | DESIGNED - | REVISED - | STATE OF ILLINOIS DEPARTMENT OF TRANSPORTATION |
| | DRAWN - | REVISED - | |
| PLOT SCALE = 100,000 ' / in. | CHECKED - | REVISED - | |
| PLOT DATE = 12/15/2023 | DATE - | REVISED - | |

**PROPOSED I-57 TYPICAL SECTIONS**

SCALE: | SHEET 7 OF 8 SHEETS | STA. | TO STA.

| F.A.I. RTE. | SECTION | COUNTY | TOTAL SHEETS | SHEET NO. |
|---|---|---|---|---|
| 57 | (38-6,38-5)RS,BRR,CLV | IROQUOIS | 213 | 23 |
| | | CONTRACT NO. 66H62 | | |
| | | ILLINOIS FED. AID PROJECT | | |

Long Section Number

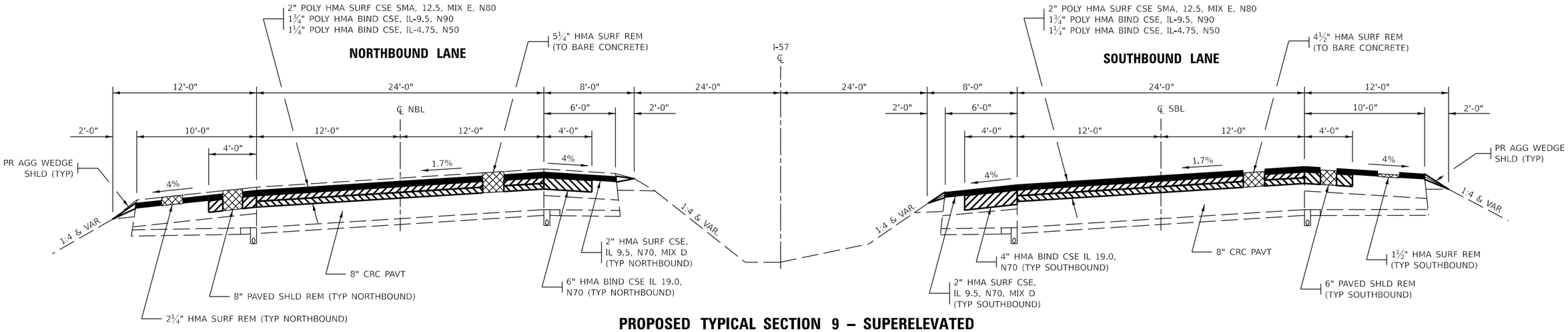


## PROPOSED TYPICAL SECTION 9 – SUPERELEVATED
## (LOOKING SOUTH /LEFT HAND CURVE SHOWN)

CURVE 14 - P.I. STA. 782+44.84
PC STA 767+09.12
PT STA 796+29.48

* EXISTING HIGH TENSION CABLE MEDIAN BARRIER LOCATIONS
SOUTHBOUND LANES
STA 520+00 TO STA 573+50
STA 574+25 TO STA 579+00

NORTHBOUND LANES
STA 523+00 TO STA 573+50
STA 574+20 TO STA 584+15
STA 866+75 TO STA 910+80

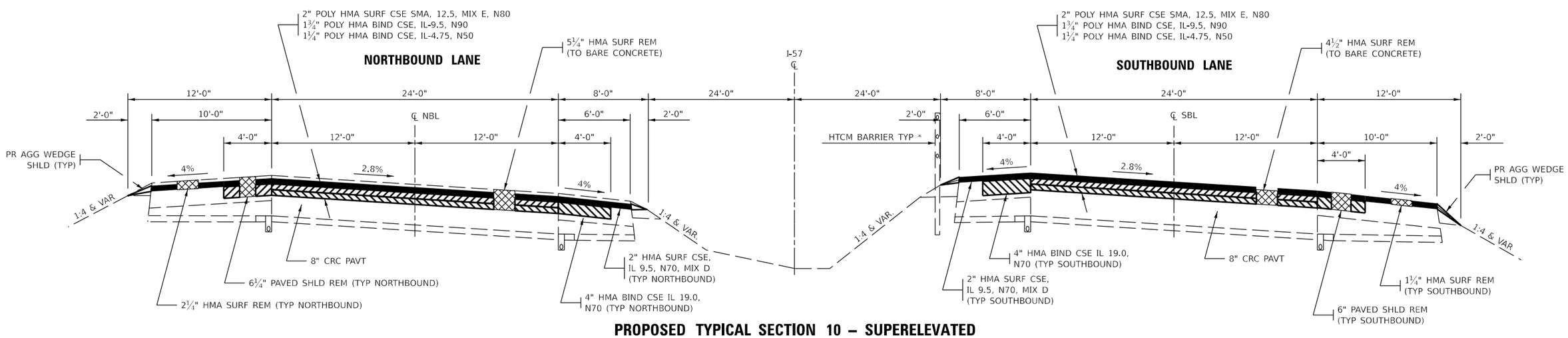


## PROPOSED TYPICAL SECTION 10 – SUPERELEVATED
## (LOOKING SOUTH /RIGHT HAND CURVE SHOWN)

CURVE 15 - P.I. STA. 889+10.59
PC STA 871+20.64
PT STA 905+90.46

MODEL: Default
FILE NAME: pw://ildotpw.bentley.com:PWIDOT/Documents/IDOT Offices/District 3/ORB Projects/D386H62/CADData/CADdata/D386H62typ1.dgn

| | | | |
|---|---|---|---|
| USER NAME = Joseph.Zagar | DESIGNED - | REVISED - | |
| | DRAWN - | REVISED - | |
| PLOT SCALE = 100,000 ' / in. | CHECKED - | REVISED - | |
| PLOT DATE = 12/15/2023 | DATE - | REVISED - | |

**STATE OF ILLINOIS**
**DEPARTMENT OF TRANSPORTATION**

**PROPOSED I-57 TYPICAL SECTIONS**

SCALE: | SHEET 8 OF 8 SHEETS | STA. TO STA.

| F.A.I. RTE. | SECTION | COUNTY | TOTAL SHEETS | SHEET NO. |
|---|---|---|---|---|
| 57 | (38-6,38-5)RS,BRR,CLV | IROQUOIS | 213 | 24 |
| | | CONTRACT NO. 66H62 | | |
| | | ILLINOIS FED. AID PROJECT | | |

Long Section Number

# MAINLINE SURFACE REMOVAL SCHEDULE (1/4)

NORTH OF STATION 740+50

NORTHBOUND LANES

| LOCATION | | | | LENGTH | HMA SURFACE REMOVAL | | | | | | | | |
|---|---|---|---|---|---|---|---|---|---|---|---|---|---|
| | | | | | MAINLINE | | | | SHOULDER | | | | |
| | | | | | 4.25" | 4.5" | 5.25" | VAR DP | 8" | 4.25" | 1.5" | 2" | 2.25" |
| STATION | TO | STATION | DESCRIPTION | FOOT | SQ YD | SQ YD | SQ YD | SQ YD | SQ YD | SQ YD | SQ YD | SQ YD | SQ YD |
| 515+00 | TO | 520+00 | SHOULDER WORK | 500 | | | | | 444.4 | | | 888.9 | |
| 520+00 | TO | 522+81 BK | TYPICAL 1 | 280.7 | 749 | | | | 249.5 | | | 499 | |
| 522+83 AH | TO | 536+00 | TYPICAL 1 | 1317.1 | 3512 | | | | 1170.7 | | | 2341.4 | |
| 536+00 | TO | 551+00 | SN 038-0086 TAPER | 1500.0 | | | | | | | | | |
| 551+00 | TO | 551+55 BK | TYPICAL 1 | 54.8 | 146 | | | | 48.7 | | | 97.4 | |
| 551+51 AH | TO | 584+59 | TYPICAL 1 | 3308.1 | 8822 | | | | 2940.5 | | | 5881 | |
| 584+59 | TO | 585+66 | SN 038-0007 OMISSION | 106.7 | | | | | | | | | |
| 585+66 | TO | 591+76 | TYPICAL 2 | 610.2 | 1627 | | | | 542.4 | | | 1084.7 | |
| 591+76 | TO | 593+50 | SN 038-0005 OMISSION | 174.0 | | | | | | | | | |
| 593+50 | TO | 603+04 | TYPICAL 2 | 954.1 | 2544 | | | | 848.1 | | | 1696.2 | |
| 603+04 | TO | 605+31 | SN 038-0003 OMISSION | 226.6 | | | | | | | | | |
| 605+31 | TO | 612+80 | TYPICAL 2 | 749.4 | 1998 | | | | 666.2 | | | 1332.3 | |
| 612+80 | TO | 617+98 BK | TYPICAL 1 | 518.0 | 1381 | | | | 460.5 | | | 920.9 | |
| 618+00 AH | TO | 625+99 | TYPICAL 1 | 798.7 | 2130 | | | | 710 | | | 1419.9 | |
| 625+99 | TO | 633+49 | TYPICAL 4 | 750.1 | 2667 | | | | 666.7 | | | 1333.5 | |
| 633+49 | TO | 635+80 | TYPICAL 4 | 231.1 | 1027 | | | | 205.4 | 77 | | 410.9 | |
| 635+80 | TO | 637+00 | TYPICAL 1 | 120.1 | 320 | | | | 106.7 | | | 213.5 | |
| 637+00 | TO | 644+00 | TYPICAL 1 | 700.0 | 1867 | | | | 622.2 | | | 1244.4 | |
| 644+00 | TO | 651+00 | SN 038-0031 PATCH | 700.0 | | | | | | | | | |
| 651+00 | TO | 657+28 | TYPICAL 1 | 628.0 | 1675 | | | | 558.2 | | | 1116.4 | |
| 657+28 | TO | 657+81 | TYPICAL 1 | 53.1 | 142 | | | | 47.2 | | | 94.5 | |
| 657+81 | TO | 661+47 | TYPICAL 4 | 365.8 | 1626 | | | | 325.1 | 406.4 | | 650.2 | |
| 661+47 | TO | 664+31 | TYPICAL 4 | 284.2 | 1010 | | | | 252.6 | | | 505.2 | |
| 664+31 | TO | 669+13 BK | TYPICAL 1 | 481.5 | 1284 | | | | 428 | | | 856.1 | |
| 669+13 AH | TO | 669+17 | TYPICAL 1 | 3.8 | 10 | | | | 3.4 | | | 6.7 | |
| 669+17 | TO | 697+47 | CURVE 13 | 2830.0 | 7547 | | | | 2515.5 | | | 5031.1 | |
| 697+47 | TO | 698+38 | SN 038-0002 OMISSION | 91.6 | | | | | | | | | |
| 698+38 | TO | 706+65 | CURVE 13 | 826.6 | 2204 | | | | 734.8 | | | 1469.6 | |
| 706+65 | TO | 710+15 | SN 038-0129 TAPER | 350.0 | | | | | | | | | |
| 710+15 | TO | 712+19 | CURVE 13 | 203.7 | 543 | | | | 181 | | | 362.1 | |
| 712+19 | TO | 740+50 | TYPICAL 1 | 2831.3 | 7550 | | | | 2516.7 | | | 5033.5 | |
| SUBTOTAL | | | | | 52381 | 0 | 0 | 0 | 17244.5 | 483.4 | 0 | 34489.4 | 0 |

MODEL: Default
FILE NAME: c:\pw_work\pwidot\ferguson\hd0874886\D366H62-schedules.dgn

| | | |
|---|---|---|
| USER NAME = Brandon.Dyer | DESIGNED - | REVISED - |
| | DRAWN - | REVISED - |
| PLOT SCALE = 100.000 ' / in. | CHECKED - | REVISED - |
| PLOT DATE = 12/15/2023 | DATE - | REVISED - |

**STATE OF ILLINOIS**
**DEPARTMENT OF TRANSPORTATION**

**SCHEDULES**

SCALE: | SHEET 1 OF 24 SHEETS | STA. | TO STA.

| F.A.I. RTE. | SECTION | COUNTY | TOTAL SHEETS | SHEET NO. |
|---|---|---|---|---|
| 57 | (38-6,38-5)RS,BRR,CLV | IROQUOIS | 213 | 25 |

CONTRACT NO. 66H62

ILLINOIS | FED. AID PROJECT

# MAINLINE SURFACE REMOVAL SCHEDULE (2/4)

NORTH OF STATION 740+50

SOUTHBOUND LANES

| LOCATION | | | | LENGTH | HMA SURFACE REMOVAL | | | | | | | | |
|---|---|---|---|---|---|---|---|---|---|---|---|---|---|
| | | | | | MAINLINE | | | | SHOULDER | | | | |
| | | | | | 4.25" | 4.5" | 5.25" | VAR DP | 8" | 4.25" | 1.5" | 2" | 2.25" |
| STATION | TO | STATION | DESCRIPTION | FOOT | SQ YD | SQ YD | SQ YD | SQ YD | SQ YD | SQ YD | SQ YD | SQ YD | SQ YD |
| 515+00 | TO | 520+00 | SHOULDER WORK | 500 | | | | | 444.4 | | | 888.9 | |
| 520+00 | TO | 522+81 BK | TYPICAL 1 | 280.7 | 749 | | | | 249.5 | | | 499 | |
| 522+83 AH | TO | 536+00 | TYPICAL 1 | 1317.06 | 3512 | | | | 1170.7 | | | 2341.4 | |
| 536+00 | TO | 551+00 | SN 038-0086 TAPER | 1500 | | | | | | | | | |
| 551+00 | TO | 551+55 BK | TYPICAL 1 | 54.76 | 146 | | | | 48.7 | | | 97.4 | |
| 551+51 AH | TO | 584+57 | TYPICAL 1 | 3306.27 | 8817 | | | | 2938.9 | | | 5877.8 | |
| 584+57 | TO | 585+64 | SN 038-0008 OMISSION | 106.67 | | | | | | | | | |
| 585+64 | TO | 591+77 | TYPICAL 2 | 613.48 | 1636 | | | | 545.3 | | | 1090.6 | |
| 591+77 | TO | 593+51 | SN 038-0006 OMISSION | 174 | | | | | | | | | |
| 593+51 | TO | 603+93 | TYPICAL 2 | 1041.69 | 2778 | | | | 925.9 | | | 1851.9 | |
| 603+93 | TO | 606+20 | SN 038-0004 OMISSION | 226.58 | | | | | | | | | |
| 606+20 | TO | 612+80 | TYPICAL 2 | 660.32 | 1761 | | | | 587 | | | 1173.9 | |
| 612+80 | TO | 617+98 BK | TYPICAL 1 | 518.03 | 1381 | | | | 460.5 | | | 920.9 | |
| 618+00 AH | TO | 630+40 | TYPICAL 1 | 1239.61 | 3306 | | | | 1101.9 | | | 2203.8 | |
| 630+40 | TO | 633+25 | TYPICAL 4 | 284.94 | 1013 | | | | 253.3 | | | 506.6 | |
| 633+25 | TO | 636+83 | TYPICAL 4 | 358.01 | 1591 | | | | 318.2 | 397.8 | | 636.5 | |
| 636+83 | TO | 637+36 | TYPICAL 1 | 53.44 | 143 | | | | 47.5 | | | 95 | |
| 637+36 | TO | 644+00 | TYPICAL 1 | 664 | 1771 | | | | 590.2 | | | 1180.4 | |
| 644+00 | TO | 651+00 | SN 038-0031 PATCH | 700 | | | | | | | | | |
| 651+00 | TO | 657+42 | TYPICAL 1 | 642 | 1712 | | | | 570.7 | | | 1141.3 | |
| 657+42 | TO | 658+82 | TYPICAL 1 | 139.84 | 373 | | | | 124.3 | | | 248.6 | |
| 658+82 | TO | 661+09 | TYPICAL 4 | 227.26 | 1010 | | | | 202 | 75.8 | | 404 | |
| 661+09 | TO | 668+54 | TYPICAL 4 | 745.234 | 2650 | | | | 662.4 | | | 1324.9 | |
| 668+54 | TO | 669+13 BK | TYPICAL 1 | 58.286 | 155 | | | | 51.8 | | | 103.6 | |
| 669+13 AH | TO | 669+17 | TYPICAL 1 | 3.77 | 10 | | | | 3.4 | | | 6.7 | |
| 669+17 | TO | 697+13 | CURVE 13 | 2796.1 | 7456 | | | | 2485.4 | | | 4970.8 | |
| 697+13 | TO | 698+03 | SN 038-0001 OMISSION | 90.04 | | | | | | | | | |
| 698+03 | TO | 705+60 | CURVE 13 | 757.1 | 2019 | | | | 673 | | | 1346 | |
| 705+60 | TO | 709+10 | SN 038-0129 TAPER | 350 | | | | | | | | | |
| 709+10 | TO | 712+19 | CURVE 13 | 308.67 | 823 | | | | 274.4 | | | 548.7 | |
| 712+19 | TO | 740+50 | TYPICAL 1 | 2831.33 | 7550 | | | | 2516.7 | | | 5033.5 | |
| SUBTOTAL | | | | | 52362 | 0 | 0 | 0 | 17246.1 | 473.6 | 0 | 34492.2 | 0 |

MODEL: Default
FILE NAME: c:\pw_work\pwidot\ferguson\hd0874886\D366H62-schedules.dgn

| | | | |
|---|---|---|---|
| USER NAME = Brandon.Dyer | DESIGNED - | REVISED - | STATE OF ILLINOIS DEPARTMENT OF TRANSPORTATION |
| | DRAWN - | REVISED - | |
| PLOT SCALE = 100.000 ' / in. | CHECKED - | REVISED - | |
| PLOT DATE = 12/15/2023 | DATE - | REVISED - | |

**SCHEDULES**

SCALE: | SHEET 1 OF 24 SHEETS | STA. | TO STA.

| F.A.I. RTE. | SECTION | COUNTY | TOTAL SHEETS | SHEET NO. |
|---|---|---|---|---|
| 57 | (38-6,38-5)RS,BRR,CLV | IROQUOIS | 213 | 26 |

CONTRACT NO. 66H62

ILLINOIS | FED. AID PROJECT

# MAINLINE SURFACE REMOVAL SCHEDULE (3/4)

SOUTH OF STATION 740+50

NORTHBOUND LANES

| LOCATION | | | | LENGTH | HMA SURFACE REMOVAL | | | | | | | | |
|---|---|---|---|---|---|---|---|---|---|---|---|---|---|
| | | | | | MAINLINE | | | | SHOULDER | | | | |
| | | | | | 4.25" | 4.5" | 5.25" | VAR DP | 8" | 4.25" | 1.5" | 2" | 2.25" |
| STATION | TO | STATION | DESCRIPTION | FOOT | SQ YD | SQ YD | SQ YD | SQ YD | SQ YD | SQ YD | SQ YD | SQ YD | SQ YD |
| 740+50 | TO | 767+10 BK | TYPICAL 3 | 2660.0 | | | 7093 | | 2364.4 | | | 4728.8 | 4728.8 |
| 767+09 AH | TO | 767+13 | TYPICAL 3 | 3.8 | | | 10 | | 3.4 | | | 6.7 | 6.7 |
| 767+13 | TO | 777+86 | CURVE 14 | 1073.3 | | | 2862 | | 954 | | | 1908.1 | 1908.1 |
| 777+86 | TO | 785+46 | TYPICAL 4 | 760.0 | | | 2702 | | 675.5 | | | 1351.1 | 1351.1 |
| 785+46 | TO | 787+47 | TYPICAL 4 | 200.6 | | | 891 | | 178.3 | 44.6 | | 356.6 | 356.6 |
| 787+47 | TO | 789+35 | CURVE 14 | 188.1 | | | 502 | | 167.2 | | | 334.4 | 334.4 |
| 789+35 | TO | 796+33 | CURVE 14 | 698.5 | | | 1863 | | 620.9 | | | 1241.7 | 1241.7 |
| 796+33 | TO | 798+24 | TYPICAL 3 | 190.5 | | | 508 | | 169.4 | | | 338.7 | 338.7 |
| 798+24 | TO | 799+64 | SN 038-0048 TAPER | 140.0 | | | | 373 | 124.4 | | | 248.9 | 248.9 |
| 799+64 | TO | 801+55 | SN 038-0048 OMISSION | 191.0 | | | | | | | | | |
| 801+55 | TO | 802+95 | SN 038-0048 TAPER | 140.0 | | | | 373 | 124.4 | | | 248.9 | 248.9 |
| 802+95 | TO | 810+36 | TYPICAL 3 | 741.0 | | | 1976 | | 658.7 | | | 1317.3 | 1317.3 |
| 810+36 | TO | 811+16 | TYPICAL 3 | 80.3 | | | 214 | | 71.4 | | | 142.8 | 142.8 |
| 811+16 | TO | 814+82 | TYPICAL 4 | 365.8 | | | 1626 | | 325.1 | 406.4 | | 650.3 | 650.3 |
| 814+82 | TO | 817+66 | TYPICAL 4 | 284.2 | | | 1010 | | 252.6 | | | 505.2 | 505.2 |
| 817+66 | TO | 827+13 BK | TYPICAL 3 | 946.4 | | | 2524 | | 841.2 | | | 1682.4 | 1682.4 |
| 827+12 AH | TO | 871+25 | TYPICAL 3 | 4412.8 | | | 11767 | | 3922.5 | | | 7844.9 | 7844.9 |
| 871+25 | TO | 905+95 | CURVE 15 | 3469.9 | | | 9253 | | 3084.3 | | | 6168.6 | 6168.6 |
| 905+95 | TO | 910+80 | TYPICAL 3 | 485.3 | | | 1294 | | 431.4 | | | 862.7 | 862.7 |
| SUBTOTAL | | | | | 0 | 0 | 46095 | 746 | 14969.1 | 451 | 0 | 29938.1 | 29938.1 |

MODEL: Default
FILE NAME: c:\pw_work\pwidot\ferguson\hd0874886\D366H62-schedules.dgn

| | | | |
|---|---|---|---|
| USER NAME = Brandon.Dyer | DESIGNED - | REVISED - | STATE OF ILLINOIS DEPARTMENT OF TRANSPORTATION |
| | DRAWN - | REVISED - | |
| PLOT SCALE = 100.000 ' / in. | CHECKED - | REVISED - | |
| PLOT DATE = 12/15/2023 | DATE - | REVISED - | |

**SCHEDULES**

SCALE: | SHEET 1 OF 24 SHEETS | STA. | TO STA.

| F.A.I. RTE. | SECTION | COUNTY | TOTAL SHEETS | SHEET NO. |
|---|---|---|---|---|
| 57 | (38-6,38-5)RS,BRR,CLV | IROQUOIS | 213 | 27 |

CONTRACT NO. 66H62

ILLINOIS | FED. AID PROJECT

# MAINLINE SURFACE REMOVAL SCHEDULE (4/4)

SOUTH OF STATION 740+50

SOUTHBOUND LANES

| LOCATION | | LENGTH | HMA SURFACE REMOVAL | | | | | | | | |
|---|---|---|---|---|---|---|---|---|---|---|---|
| | | | MAINLINE | | | | SHOULDER | | | | |
| | | | 4.25" | 4.5" | 5.25" | VAR DP | 8" | 4.25" | 1.5" | 2" | 2.25" |
| STATION TO STATION | DESCRIPTION | FOOT | SQ YD | SQ YD | SQ YD | SQ YD | SQ YD | SQ YD | SQ YD | SQ YD | SQ YD |
| 740+50 TO 767+10 BK | TYPICAL 3 | 2659.95 | | 7093 | | | 2364.4 | | 4728.8 | 4728.8 | |
| 767+09 AH TO 767+13 | TYPICAL 3 | 3.77 | | 10 | | | 3.4 | | 6.7 | 6.7 | |
| 767+13 TO 784+42 | CURVE 14 | 1728.47 | | 4609 | | | 1536.4 | | 3072.8 | 3072.8 | |
| 784+42 TO 787+15 | TYPICAL 4 | 273.22 | | 971 | | | 242.9 | | 485.7 | 485.7 | |
| 787+15 TO 790+72 | TYPICAL 4 | 357.43 | | 1589 | | | 317.7 | 397.1 | 635.4 | 635.4 | |
| 790+72 TO 791+50 | CURVE 14 | 77.78 | | 207 | | | 69.1 | | 138.3 | 138.3 | |
| 791+50 TO 796+33 | CURVE 14 | 483.47 | | 1289 | | | 429.8 | | 859.5 | 859.5 | |
| 796+33 TO 798+24 | TYPICAL 3 | 190.53 | | 508 | | | 169.4 | | 338.7 | 338.7 | |
| 798+24 TO 799+64 | SN 038-0048 TAPER | 140 | | | | 373 | 124.4 | | 248.9 | 248.9 | |
| 799+64 TO 801+55 | SN 038-0048 OMISSION | 191 | | | | | | | | | |
| 801+55 TO 802+95 | SN 038-0048 TAPER | 140 | | | | 373 | 124.4 | | 248.9 | 248.9 | |
| 802+95 TO 810+73 | TYPICAL 3 | 778 | | 2075 | | | 691.6 | | 1383.1 | 1383.1 | |
| 810+73 TO 811+62 | TYPICAL 3 | 88.91 | | 237 | | | 79 | | 158.1 | 158.1 | |
| 811+62 TO 815+20 | TYPICAL 4 | 357.93 | | 1591 | | | 318.2 | 238.6 | 636.3 | 636.3 | |
| 815+20 TO 822+70 | TYPICAL 4 | 749.9 | | 2666 | | | 666.6 | | 1333.2 | 1333.2 | |
| 822+70 TO 827+13 BK | TYPICAL 3 | 442.87 | | 1181 | | | 393.7 | | 787.3 | 787.3 | |
| 827+12 AH TO 871+25 | TYPICAL 3 | 4412.77 | | 11767 | | | 3922.5 | | 7844.9 | 7844.9 | |
| 871+25 TO 905+95 | CURVE 15 | 3469.86 | | 9253 | | | 3084.3 | | 6168.6 | 6168.6 | |
| 905+95 TO 910+80 | TYPICAL 3 | 485.29 | | 1294 | | | 431.4 | | 862.7 | 862.7 | |
| SUBTOTAL | | | 0 | 46340 | 0 | 746 | 14969.2 | 635.7 | 29937.9 | 29937.9 | 0 |
| MAINLINE TOTAL | | | 104743 | 46340 | 46095 | 1492 | 64428.9 | 2043.7 | 29937.9 | 128857.6 | 29938.1 |

MODEL: Default
FILE NAME: c:\pw_work\pwidot\ferguson\jh\d0874886\D366H62-schedules.dgn

| | | | |
|---|---|---|---|
| USER NAME = Brandon.Dyer | DESIGNED - | REVISED - | STATE OF ILLINOIS DEPARTMENT OF TRANSPORTATION |
| | DRAWN - | REVISED - | |
| PLOT SCALE = 100.000 ' / in. | CHECKED - | REVISED - | |
| PLOT DATE = 12/15/2023 | DATE - | REVISED - | |

SCHEDULES

SCALE: SHEET 1 OF 24 SHEETS STA. TO STA.

| F.A.I. RTE. | SECTION | COUNTY | TOTAL SHEETS | SHEET NO. |
|---|---|---|---|---|
| 57 | (38-6,38-5)RS,BRR,CLV | IROQUOIS | 213 | 28 |

CONTRACT NO. 66H62

ILLINOIS FED. AID PROJECT

# MAINLINE PAVING SCHEDULE (1/4)

NORTH OF STATION 740+50

NORTHBOUND LANES

| LOCATION | | | | LENGTH | SHOULDER | | | | | MAINLINE | | | | SHOULDER |
|---|---|---|---|---|---|---|---|---|---|---|---|---|---|---|
| | | | | | BINDER COURSE | | | | | | | SURFACE COURSE | | AGG |
| | | | | | IL 19.0 N70, POLY | | | | | IL 19.0 N90 POLY | IL 9.5 N90 POLY | IL 4.75 N50 POLY | IL 12.5 N80 MIX E | IL 9.5 POLY N70 MIX D | WEDGE SHLD TYPE B |
| | | | | | 8" | 6" | 4.75" | 4" | 2.25" | 2.25" | 1.75" | 1.25" | 2" | 2" | |
| STATION | TO | STATION | DESCRIPTION | FOOT | TON | TON | TON | TON | TON | TON | TON | TON | TON | TON | TON |
| 515+00 | TO | 520+00 | SHOULDER WORK | 500 | 99.6 | 74.7 | | | | | | | | 99.6 | 6.3 |
| 520+00 | TO | 522+81 BK | TYPICAL 1 | 280.7 | 55.9 | 41.9 | | | | 94.3 | | | 83.8 | 55.9 | 3.6 |
| 522+83 AH | TO | 536+00 | TYPICAL 1 | 1317.1 | 262.2 | 196.7 | | | | 442.5 | | | 393.4 | 262.2 | 16.7 |
| 536+00 | TO | 551+00 | SN 038-0086 PATCH | 1500.0 | | | | | | | | | | | 19 |
| 551+00 | TO | 551+55 BK | TYPICAL 1 | 54.8 | 10.9 | 8.2 | | | | 18.4 | | | 16.4 | 10.9 | 0.7 |
| 551+51 AH | TO | 584+59 | TYPICAL 1 | 3308.1 | 658.7 | 494 | | | | 1111.5 | | | 988 | 658.7 | 41.9 |
| 584+59 | TO | 585+66 | SN 038-0007 OMISSION | 106.7 | | | | | | | | | | | |
| 585+66 | TO | 591+76 | TYPICAL 2 | 610.2 | 121.5 | 91.1 | | | | 205 | | | 182.2 | 121.5 | |
| 591+76 | TO | 593+50 | SN 038-0005 OMISSION | 174.0 | | | | | | | | | | | |
| 593+50 | TO | 603+04 | TYPICAL 2 | 954.1 | 190 | 142.5 | | | | 320.6 | | | 285 | 190 | |
| 603+04 | TO | 605+31 | SN 038-0003 OMISSION | 226.6 | | | | | | | | | | | |
| 605+31 | TO | 612+80 | TYPICAL 2 | 749.4 | 149.2 | 111.9 | | | | 251.8 | | | 223.8 | 149.2 | |
| 612+80 | TO | 617+98 BK | TYPICAL 1 | 518.0 | 103.1 | 77.4 | | | | 174.1 | | | 154.7 | 103.1 | 6.6 |
| 618+00 AH | TO | 625+99 | TYPICAL 1 | 798.7 | 159 | 119.3 | | | | 268.4 | | | 238.5 | 159 | 10.1 |
| 625+99 | TO | 633+49 | TYPICAL 4 | 750.1 | 149.3 | 112 | | | | 336 | | | 298.7 | 149.3 | 9.5 |
| 633+49 | TO | 635+80 | TYPICAL 4 | 231.1 | 46 | 34.5 | | | 9.7 | 129.4 | | | 115.1 | 54.6 | 2.9 |
| 635+80 | TO | 637+00 | TYPICAL 1 | 120.1 | 23.9 | 17.9 | | | | 40.4 | | | 35.9 | 23.9 | 1.5 |
| 637+00 | TO | 644+00 | TYPICAL 1 | 700.0 | 139.4 | 104.5 | | | | 235.2 | | | 209.1 | 139.4 | 8.9 |
| 644+00 | TO | 651+00 | SN 038-0031 PATCH | 700.0 | | | | | | | | | | | 8.9 |
| 651+00 | TO | 657+28 | TYPICAL 1 | 628.0 | 125 | 93.8 | | | | 211 | | | 187.6 | 125 | 7.9 |
| 657+28 | TO | 657+81 | TYPICAL 1 | 53.1 | 10.6 | 7.9 | | | | 17.9 | | | 15.9 | 10.6 | 0.7 |
| 657+81 | TO | 661+47 | TYPICAL 4 | 365.8 | 72.8 | 54.6 | | | 51.2 | 204.8 | | | 182.1 | 118.3 | 4.6 |
| 661+47 | TO | 664+31 | TYPICAL 4 | 284.2 | 56.6 | 42.4 | | | | 127.3 | | | 113.2 | 56.6 | 3.6 |
| 664+31 | TO | 669+13 BK | TYPICAL 1 | 481.5 | 95.9 | 71.9 | | | | 161.8 | | | 143.8 | 95.9 | 6.1 |
| 669+13 AH | TO | 669+17 | TYPICAL 1 | 3.8 | 0.8 | 0.6 | | | | 1.3 | | | 1.1 | 0.8 | 0 |
| 669+17 | TO | 697+47 | CURVE 13 | 2830.0 | 563.5 | 422.6 | | | | 950.9 | | | 845.2 | 563.5 | 35.8 |
| 697+47 | TO | 698+38 | SN 038-0002 OMISSION | 91.6 | | | | | | | | | | | |
| 698+38 | TO | 706+65 | CURVE 13 | 826.6 | 164.6 | 123.4 | | | | 277.7 | | | 246.9 | 164.6 | 10.5 |
| 706+65 | TO | 710+15 | SN 038-0129 TAPER | 350.0 | | | | | | | | | | | 4.4 |
| 710+15 | TO | 712+19 | CURVE 13 | 203.7 | 40.6 | 30.4 | | | | 68.4 | | | 60.8 | 40.6 | 2.6 |
| 712+19 | TO | 740+50 | TYPICAL 1 | 2831.3 | 563.7 | 422.8 | | | | 951.3 | | | 845.6 | 563.7 | 35.8 |
| SUBTOTAL | | | | | 3862.8 | 2897.0 | 0.0 | 0.0 | 60.9 | 6600.0 | 0.0 | 0.0 | 5866.8 | 3916.9 | 248.6 |

MODEL: Default
FILE NAME: c:\pw_work\pwidot\cody.m.johnson@illinois.gov\d0874886\D366H62-schedules.dgn

| | | |
|---|---|---|
| USER NAME = Joseph.Zagar | DESIGNED - | REVISED - |
| | DRAWN - | REVISED - |
| PLOT SCALE = 100,000 ' / in. | CHECKED - | REVISED - |
| PLOT DATE = 1/4/2024 | DATE - | REVISED - |

**STATE OF ILLINOIS**
**DEPARTMENT OF TRANSPORTATION**

**SCHEDULES**

SCALE: | SHEET 1 OF 24 SHEETS | STA. | TO STA.

| F.A.I. RTE. | SECTION | COUNTY | TOTAL SHEETS | SHEET NO. |
|---|---|---|---|---|
| 57 | (38-6,38-5)RS,BRR,CLV | IROQUOIS | 213 | 29 |

CONTRACT NO. 66H62

ILLINOIS | FED. AID PROJECT

# MAINLINE PAVING SCHEDULE (2/4)

NORTH OF STATION 740+50

SOUTHBOUND LANES

| LOCATION | | | | LENGTH | SHOULDER | | | | | MAINLINE | | | | SHOULDER |
|---|---|---|---|---|---|---|---|---|---|---|---|---|---|---|
| | | | | | BINDER COURSE | | | | | | | SURFACE COURSE | | AGG |
| | | | | | IL 19.0 N70, POLY | | | | | IL 19.0 N90 POLY | IL 9.5 N90 POLY | IL 4.75 N50 POLY | IL 12.5 N80 MIX E | IL 9.5 POLY N70 MIX D | WEDGE SHLD TYPE B |
| | | | | | 8" | 6" | 4.75" | 4" | 2.25" | 2.25" | 1.75" | 1.25" | 2" | 2" | |
| STATION | TO | STATION | DESCRIPTION | FOOT | TON | TON | TON | TON | TON | TON | TON | TON | TON | TON | TON |
| 515+00 | TO | 520+00 | SHOULDER WORK | 500 | 99.6 | 74.7 | | | | | | | | 99.6 | 6.3 |
| 520+00 | TO | 522+81 BK | TYPICAL 1 | 280.7 | 55.9 | 41.9 | | | | 94.3 | | | 83.8 | 55.9 | 3.6 |
| 522+83 AH | TO | 536+00 | TYPICAL 1 | 1317.06 | 262.2 | 196.7 | | | | 442.5 | | | 393.4 | 262.2 | 16.7 |
| 536+00 | TO | 551+00 | SN 038-0086 PATCH | 1500 | | | | | | | | | | | 19 |
| 551+00 | TO | 551+55 BK | TYPICAL 1 | 54.76 | 10.9 | 8.2 | | | | 18.4 | | | 16.4 | 10.9 | 0.7 |
| 551+51 AH | TO | 584+57 | TYPICAL 1 | 3306.27 | 658.3 | 493.7 | | | | 1110.9 | | | 987.5 | 658.3 | 41.8 |
| 584+57 | TO | 585+64 | SN 038-0008 OMISSION | 106.67 | | | | | | | | | | | |
| 585+64 | TO | 591+77 | TYPICAL 2 | 613.48 | 122.2 | 91.6 | | | | 206.1 | | | 183.2 | 122.2 | |
| 591+77 | TO | 593+51 | SN 038-0006 OMISSION | 174 | | | | | | | | | | | |
| 593+51 | TO | 603+93 | TYPICAL 2 | 1041.69 | 207.4 | 155.6 | | | | 350 | | | 311.1 | 207.4 | |
| 603+93 | TO | 606+20 | SN 038-0004 OMISSION | 226.58 | | | | | | | | | | | |
| 606+20 | TO | 612+80 | TYPICAL 2 | 660.32 | 131.5 | 98.6 | | | | 221.9 | | | 197.2 | 131.5 | |
| 612+80 | TO | 617+98 BK | TYPICAL 1 | 518.03 | 103.1 | 77.4 | | | | 174.1 | | | 154.7 | 103.1 | 6.6 |
| 618+00 AH | TO | 630+40 | TYPICAL 1 | 1239.61 | 246.8 | 185.1 | | | | 416.5 | | | 370.2 | 246.8 | 15.7 |
| 630+40 | TO | 633+25 | TYPICAL 4 | 284.94 | 56.7 | 42.6 | | | | 127.7 | | | 113.5 | 56.7 | 3.6 |
| 633+25 | TO | 636+83 | TYPICAL 4 | 358.01 | 71.3 | 53.5 | | | 50.1 | 200.5 | | | 178.2 | 115.8 | 4.5 |
| 636+83 | TO | 637+36 | TYPICAL 1 | 53.44 | 10.6 | 8 | | | | 18 | | | 16 | 10.6 | 0.7 |
| 637+36 | TO | 644+00 | TYPICAL 1 | 664 | 132.2 | 99.2 | | | | 223.1 | | | 198.3 | 132.2 | 8.4 |
| 644+00 | TO | 651+00 | SN 038-0031 PATCH | 700 | | | | | | | | | | | 8.9 |
| 651+00 | TO | 657+42 | TYPICAL 1 | 642 | 127.8 | 95.9 | | | | 215.7 | | | 191.7 | 127.8 | 8.1 |
| 657+42 | TO | 658+82 | TYPICAL 1 | 139.84 | 27.8 | 20.9 | | | | 47 | | | 41.8 | 27.8 | 1.8 |
| 658+82 | TO | 661+09 | TYPICAL 4 | 227.26 | 45.2 | 33.9 | | | 9.5 | 127.3 | | | 113.1 | 53.7 | 2.9 |
| 661+09 | TO | 668+54 | TYPICAL 4 | 745.234 | 148.4 | 111.3 | | | | 333.9 | | | 296.8 | 148.4 | 9.4 |
| 668+54 | TO | 669+13 BK | TYPICAL 1 | 58.286 | 11.6 | 8.7 | | | | 19.6 | | | 17.4 | 11.6 | 0.7 |
| 669+13 AH | TO | 669+17 | TYPICAL 1 | 3.77 | 0.8 | 0.6 | | | | 1.3 | | | 1.1 | 0.8 | 0 |
| 669+17 | TO | 697+13 | CURVE 13 | 2796.1 | 556.7 | 417.6 | | | | 939.5 | | | 835.1 | 556.7 | 35.4 |
| 697+13 | TO | 698+03 | SN 038-0001 OMISSION | 90.04 | | | | | | | | | | | |
| 698+03 | TO | 705+60 | CURVE 13 | 757.1 | 150.7 | 113.1 | | | | 254.4 | | | 226.1 | 150.7 | 9.6 |
| 705+60 | TO | 709+10 | SN 038-0129 TAPER | 350 | | | | | | | | | | | 4.4 |
| 709+10 | TO | 712+19 | CURVE 13 | 308.67 | 61.5 | 46.1 | | | | 103.7 | | | 92.2 | 61.5 | 3.9 |
| 712+19 | TO | 740+50 | TYPICAL 1 | 2831.33 | 563.7 | 422.8 | | | | 951.3 | | | 845.6 | 563.7 | 35.8 |
| SUBTOTAL | | | | | 3862.9 | 2897.7 | 0 | 0 | 59.6 | 6597.7 | 0 | 0 | 5864.4 | 3915.9 | 248.5 |

MODEL: Default
FILE NAME: c:\pw_work\pwidot\cody.m.johnson@illinois.gov\d0874886\D366H62-schedules.dgn

| | | |
|---|---|---|
| USER NAME = Joseph.Zagar | DESIGNED - | REVISED - |
| | DRAWN - | REVISED - |
| PLOT SCALE = 100,000 ' / in. | CHECKED - | REVISED - |
| PLOT DATE = 1/4/2024 | DATE - | REVISED - |

**STATE OF ILLINOIS**
**DEPARTMENT OF TRANSPORTATION**

**SCHEDULES**

SCALE: | SHEET 1 OF 24 SHEETS | STA. | TO STA.

| F.A.I. RTE. | SECTION | COUNTY | TOTAL SHEETS | SHEET NO. |
|---|---|---|---|---|
| 57 | (38-6,38-5)RS,BRR,CLV | IROQUOIS | 213 | 30 |

CONTRACT NO. 66H62

ILLINOIS | FED. AID PROJECT

# MAINLINE PAVING SCHEDULE (3/4)

SOUTH OF STATION 740+50

NORTHBOUND LANES

| LOCATION | | | LENGTH | SHOULDER | | | | | MAINLINE | | | SHOULDER | | |
|---|---|---|---|---|---|---|---|---|---|---|---|---|---|---|
| | | | | BINDER COURSE | | | | | | | | SURFACE COURSE | | AGG |
| | | | | IL 19.0 N70, POLY | | | | | IL 19.0 N90 POLY | IL 9.5 N90 POLY | IL 4.75 N50 POLY | IL 12.5 N80 MIX E | IL 9.5 POLY N70 MIX D | WEDGE SHLD TYPE B |
| | | | | 8" | 6" | 4.75" | 4" | 2.25" | 2.25" | 1.75" | 1.25" | 2" | 2" | |
| STATION | TO STATION | DESCRIPTION | FOOT | TON | TON | TON | TON | TON | TON | TON | TON | TON | TON | TON |
| 740+50 | TO 767+10 BK | TYPICAL 3 | 2660.0 | 529.6 | | | 264.8 | | | 695.1 | 496.5 | 794.4 | 529.6 | 33.7 |
| 767+09 AH | TO 767+13 | TYPICAL 3 | 3.8 | 0.8 | | | 0.4 | | | 1 | 0.7 | 1.1 | 0.8 | 0 |
| 767+13 | TO 777+86 | CURVE 14 | 1073.3 | 213.7 | | | 106.9 | | | 280.5 | 200.3 | 320.6 | 213.7 | 13.6 |
| 777+86 | TO 785+46 | TYPICAL 4 | 760.0 | 151.3 | | | 75.7 | | | 264.8 | 189.1 | 302.6 | 151.3 | 9.6 |
| 785+46 | TO 787+47 | TYPICAL 4 | 200.6 | 39.9 | | | 20 | 5.6 | | 87.4 | 62.4 | 99.8 | 44.9 | 2.5 |
| 787+47 | TO 789+35 | CURVE 14 | 188.1 | 37.4 | | | 18.7 | | | 49.2 | 35.1 | 56.2 | 37.4 | 2.4 |
| 789+35 | TO 796+33 | CURVE 14 | 698.5 | 139.1 | | | 69.5 | | | 182.5 | 130.4 | 208.6 | 139.1 | 8.8 |
| 796+33 | TO 798+24 | TYPICAL 3 | 190.5 | 37.9 | | | 19 | | | 49.8 | 35.6 | 56.9 | 37.9 | 2.4 |
| 798+24 | TO 799+64 | SN 038-0048 TAPER | 140.0 | 27.9 | | | 13.9 | | | 36.6 | 26.1 | 41.8 | 27.9 | 1.8 |
| 799+64 | TO 801+55 | SN 038-0048 OMISSION | 191.0 | | | | | | | | | | | |
| 801+55 | TO 802+95 | SN 038-0048 TAPER | 140.0 | 27.9 | | | 13.9 | | | 36.6 | 26.1 | 41.8 | 27.9 | 1.8 |
| 802+95 | TO 810+36 | TYPICAL 3 | 741.0 | 147.5 | | | 73.8 | | | 193.6 | 138.3 | 221.3 | 147.5 | 9.4 |
| 810+36 | TO 811+16 | TYPICAL 3 | 80.3 | 16 | | | 8 | | | 21 | 15 | 24 | 16 | 1 |
| 811+16 | TO 814+82 | TYPICAL 4 | 365.8 | 72.8 | | | 36.4 | 51.2 | | 159.3 | 113.8 | 182.1 | 118.4 | 4.6 |
| 814+82 | TO 817+66 | TYPICAL 4 | 284.2 | 56.6 | | | 28.3 | | | 99 | 70.7 | 113.2 | 56.6 | 3.6 |
| 817+66 | TO 827+13 BK | TYPICAL 3 | 946.4 | 188.4 | | | 94.2 | | | 247.3 | 176.7 | 282.6 | 188.4 | 12 |
| 827+12 AH | TO 871+25 | TYPICAL 3 | 4412.8 | 878.6 | | | 439.3 | | | 1153.2 | 823.7 | 1317.9 | 878.6 | 55.9 |
| 871+25 | TO 905+95 | CURVE 15 | 3469.9 | 690.9 | | | 345.4 | | | 906.8 | 647.7 | 1036.3 | 690.9 | 43.9 |
| 905+95 | TO 910+80 | TYPICAL 3 | 485.3 | 96.6 | | | 48.3 | | | 126.8 | 90.6 | 144.9 | 96.6 | 6.1 |
| SUBTOTAL | | | | 3352.9 | 0 | 0 | 1676.5 | 56.8 | 0 | 4590.5 | 3278.8 | 5246.1 | 3403.5 | 213.1 |

# MAINLINE PAVING SCHEDULE (4/4)

SOUTH OF STATION 740+50

SOUTHBOUND LANES

| LOCATION | | | | LENGTH | SHOULDER | | | | | MAINLINE | | | | SHOULDER |
|---|---|---|---|---|---|---|---|---|---|---|---|---|---|---|
| | | | | | BINDER COURSE | | | | | | | SURFACE COURSE | | AGG |
| | | | | | IL 19.0 N70, POLY | | | | | IL 19.0 N90 POLY | IL 9.5 N90 POLY | IL 4.75 N50 POLY | IL 12.5 N80 MIX E | IL 9.5 POLY N70 MIX D | WEDGE SHLD TYPE B |
| | | | | | 8" | 6" | 4.75" | 4" | 2.25" | 2.25" | 1.75" | 1.25" | 2" | 2" | |
| STATION | TO | STATION | DESCRIPTION | FOOT | TON | TON | TON | TON | TON | TON | TON | TON | TON | TON | TON |
| 740+50 | TO | 767+10 BK | TYPICAL 3 | 2659.95 | 529.6 | | 314.5 | | | | 695.1 | 496.5 | 794.4 | 529.6 | 33.7 |
| 767+09 AH | TO | 767+13 | TYPICAL 3 | 3.77 | 0.8 | | 0.4 | | | | 1 | 0.7 | 1.1 | 0.8 | 0 |
| 767+13 | TO | 784+42 | CURVE 14 | 1728.47 | 344.2 | | 204.3 | | | | 451.7 | 322.6 | 516.2 | 344.2 | 21.9 |
| 784+42 | TO | 787+15 | TYPICAL 4 | 273.22 | 54.4 | | 32.3 | | | | 95.2 | 68 | 108.8 | 54.4 | 3.5 |
| 787+15 | TO | 790+72 | TYPICAL 4 | 357.43 | 71.2 | | 42.3 | | 50 | | 155.7 | 111.2 | 177.9 | 115.6 | 4.5 |
| 790+72 | TO | 791+50 | CURVE 14 | 77.78 | 15.5 | | 9.2 | | | | 20.3 | 14.5 | 23.2 | 15.5 | 1 |
| 791+50 | TO | 796+33 | CURVE 14 | 483.47 | 96.3 | | 57.2 | | | | 126.3 | 90.2 | 144.4 | 96.3 | 6.1 |
| 796+33 | TO | 798+24 | TYPICAL 3 | 190.53 | 37.9 | | 22.5 | | | | 49.8 | 35.6 | 56.9 | 37.9 | 2.4 |
| 798+24 | TO | 799+64 | SN 038-0048 TAPER | 140 | 27.9 | | 16.6 | | | | 36.6 | 26.1 | 41.8 | 27.9 | 1.8 |
| 799+64 | TO | 801+55 | SN 038-0048 OMISSION | 191 | | | | | | | | | | | |
| 801+55 | TO | 802+95 | SN 038-0048 TAPER | 140 | 27.9 | | 16.6 | | | | 36.6 | 26.1 | 41.8 | 27.9 | 1.8 |
| 802+95 | TO | 810+73 | TYPICAL 3 | 778 | 154.9 | | 92 | | | | 203.3 | 145.2 | 232.4 | 154.9 | 9.8 |
| 810+73 | TO | 811+62 | TYPICAL 3 | 88.91 | 17.7 | | 10.5 | | | | 23.2 | 16.6 | 26.6 | 17.7 | 1.1 |
| 811+62 | TO | 815+20 | TYPICAL 4 | 357.93 | 71.3 | | 42.3 | | 30.1 | | 155.9 | 111.4 | 178.2 | 98 | 4.5 |
| 815+20 | TO | 822+70 | TYPICAL 4 | 749.9 | 149.3 | | 88.7 | | | | 261.3 | 186.6 | 298.6 | 149.3 | 9.5 |
| 822+70 | TO | 827+13 BK | TYPICAL 3 | 442.87 | 88.2 | | 52.4 | | | | 115.7 | 82.7 | 132.3 | 88.2 | 5.6 |
| 827+12 AH | TO | 871+25 | TYPICAL 3 | 4412.77 | 878.6 | | 521.7 | | | | 1153.2 | 823.7 | 1317.9 | 878.6 | 55.9 |
| 871+25 | TO | 905+95 | CURVE 15 | 3469.86 | 690.9 | | 410.2 | | | | 906.8 | 647.7 | 1036.3 | 690.9 | 43.9 |
| 905+95 | TO | 910+80 | TYPICAL 3 | 485.29 | 96.6 | | 57.4 | | | | 126.8 | 90.6 | 144.9 | 96.6 | 6.1 |
| SUBTOTAL | | | | | 3353.2 | 0 | 1991.1 | 0 | 80.1 | 0 | 4614.5 | 3296 | 5273.7 | 3424.3 | 213.1 |
| MAINLINE TOTAL | | | | | 24151.5 | | | | | 13197.7 | 9205 | 6574.8 | 22251 | 14660.6 | 923.3 |

MODEL: Default
FILE NAME: c:\pw_work\dot\cody.m.johnson@illinois.gov\d0874886\D366H62-schedules.dgn

| | | |
|---|---|---|
| USER NAME = Joseph.Zagar | DESIGNED - | REVISED - |
| | DRAWN - | REVISED - |
| PLOT SCALE = 100,000 ' / in. | CHECKED - | REVISED - |
| PLOT DATE = 1/4/2024 | DATE - | REVISED - |

**STATE OF ILLINOIS**
**DEPARTMENT OF TRANSPORTATION**

**SCHEDULES**

SCALE: | SHEET 1 OF 24 SHEETS | STA. | TO STA.

| F.A.I. RTE. | SECTION | COUNTY | TOTAL SHEETS | SHEET NO. |
|---|---|---|---|---|
| 57 | (38-6,38-5)RS,BRR,CLV | IROQUOIS | 213 | 32 |

CONTRACT NO. 66H62

ILLINOIS | FED. AID PROJECT

# MAINLINE SCHEDULE (1/4)

NORTH OF STATION 740+50

NORTHBOUND LANES

| LOCATION | | | | LENGTH | RAMP/I-57 JOINT LONG PARTIAL DEPTH REM 2" | RAMP/I-57 JOINT LONG PARTIAL DEPTH PATCH | BIT MAT (TACK COAT) | LONG JOINT SEAL | LONG JOINT SEAL 1/2 WIDTH | MIX FOR CRACKS, JOINTS & FLGWYS | TEMP RAMP | MATERIAL TRANSFER DEVICE |
|---|---|---|---|---|---|---|---|---|---|---|---|---|
| STATION | TO | STATION | DESCRIPTION | FOOT | FOOT | TON | POUND | FOOT | FOOT | TON | SQ YD | TON |
| 515+00 | TO | 520+00 | SHOULDER WORK | 500 | | | 200 | | | 0.7 | | 0 |
| 520+00 | TO | 522+81 BK | TYPICAL 1 | 280.7 | | | 842 | 842 | | 0.4 | 13 | 178.1 |
| 522+83 AH | TO | 536+00 | TYPICAL 1 | 1317.1 | | | 3951 | 3951 | | 1.8 | 13 | 835.9 |
| 536+00 | TO | 551+00 | SN 038-0086 PATCH | 1500.0 | | | | | | | | 0 |
| 551+00 | TO | 551+55 BK | TYPICAL 1 | 54.8 | | | 164 | 164 | | 0.1 | 13 | 34.8 |
| 551+51 AH | TO | 584+59 | TYPICAL 1 | 3308.1 | | | 9924 | 9924 | | 4.4 | 13 | 2099.5 |
| 584+59 | TO | 585+66 | SN 038-0007 OMISSION | 106.7 | | | | | | | | 0 |
| 585+66 | TO | 591+76 | TYPICAL 2 | 610.2 | | | 2197 | 1830 | | 0.8 | 26 | 387.2 |
| 591+76 | TO | 593+50 | SN 038-0005 OMISSION | 174.0 | | | | | | | | 0 |
| 593+50 | TO | 603+04 | TYPICAL 2 | 954.1 | | | 3435 | 2862 | | 1.3 | 26 | 605.6 |
| 603+04 | TO | 605+31 | SN 038-0003 OMISSION | 226.6 | | | | | | | | 0 |
| 605+31 | TO | 612+80 | TYPICAL 2 | 749.4 | | | 2698 | 2248 | | 1 | 13 | 475.6 |
| 612+80 | TO | 617+98 BK | TYPICAL 1 | 518.0 | | | 1554 | 1554 | | 0.7 | | 328.8 |
| 618+00 AH | TO | 625+99 | TYPICAL 1 | 798.7 | | | 2396 | 2396 | | 1.1 | | 506.9 |
| 625+99 | TO | 633+49 | TYPICAL 4 | 750.1 | 751 | 18.7 | 2700 | 2250 | | 1.2 | | 634.7 |
| 633+49 | TO | 635+80 | TYPICAL 4 | 231.1 | 189 | 4.7 | 1005 | 693 | | 0.4 | | 244.5 |
| 635+80 | TO | 637+00 | TYPICAL 1 | 120.1 | | | 360 | 360 | | 0.2 | | 76.3 |
| 637+00 | TO | 644+00 | TYPICAL 1 | 700.0 | | | 2100 | 2100 | | 0.9 | 13 | 444.3 |
| 644+00 | TO | 651+00 | SN 038-0031 PATCH | 700.0 | | | | | | | | 0 |
| 651+00 | TO | 657+28 | TYPICAL 1 | 628.0 | | | 1884 | 1884 | | 0.8 | 13 | 398.6 |
| 657+28 | TO | 657+81 | TYPICAL 1 | 53.1 | | | 159 | 159 | | 0.1 | | 33.8 |
| 657+81 | TO | 661+47 | TYPICAL 4 | 365.8 | 95 | 2.4 | 1719 | 1097 | | 0.7 | | 386.9 |
| 661+47 | TO | 664+31 | TYPICAL 4 | 284.2 | 285 | 7.1 | 1023 | 853 | | 0.5 | | 240.5 |
| 664+31 | TO | 669+13 BK | TYPICAL 1 | 481.5 | | | 1445 | 1445 | | 0.6 | | 305.6 |
| 669+13 AH | TO | 669+17 | TYPICAL 1 | 3.8 | | | 11 | 11 | | 0 | | 2.4 |
| 669+17 | TO | 697+47 | CURVE 13 | 2830.0 | | | 8490 | 8490 | | 3.8 | 13 | 1796.1 |
| 697+47 | TO | 698+38 | SN 038-0002 OMISSION | 91.6 | | | | | | | | 0 |
| 698+38 | TO | 706+65 | CURVE 13 | 826.6 | | | 2480 | 2480 | | 1.1 | 26 | 524.6 |
| 706+65 | TO | 710+15 | SN 038-0129 TAPER | 350.0 | | | | | | | | 0 |
| 710+15 | TO | 712+19 | CURVE 13 | 203.7 | | | 611 | 611 | | 0.3 | 13 | 129.2 |
| 712+19 | TO | 740+50 | TYPICAL 1 | 2831.3 | | | 8494 | 8494 | | 3.8 | | 1796.9 |
| SUBTOTAL | | | | | 1320.0 | 32.9 | 59842.0 | 56698.0 | 0.0 | 26.7 | 195.0 | 12466.8 |

MODEL: Default
FILE NAME: c:\pw_work\pwidot\cody.m.johnson@illinois.gov\d0874886\D366H62-schedules.dgn

| | | |
|---|---|---|
| USER NAME = Joseph.Zagar | DESIGNED - | REVISED - |
| | DRAWN - | REVISED - |
| PLOT SCALE = 100,000 ' / in. | CHECKED - | REVISED - |
| PLOT DATE = 1/4/2024 | DATE - | REVISED - |

**STATE OF ILLINOIS**
**DEPARTMENT OF TRANSPORTATION**

**SCHEDULES**

SCALE: | SHEET 1 OF 24 SHEETS | STA. | TO STA.

| F.A.I. RTE. | SECTION | COUNTY | TOTAL SHEETS | SHEET NO. |
|---|---|---|---|---|
| 57 | (38-6,38-5)RS,BRR,CLV | IROQUOIS | 213 | 33 |

CONTRACT NO. 66H62

ILLINOIS | FED. AID PROJECT

# MAINLINE SCHEDULE (2/4)

NORTH OF STATION 740+50

SOUTHBOUND LANES

| LOCATION | | | | LENGTH | RAMP/I-57 JOINT LONG PARTIAL DEPTH REM 2.25" | RAMP/I-57 JOINT LONG PARTIAL DEPTH PATCH | BIT MAT (TACK COAT) | LONG JOINT SEAL | LONG JOINT SEAL 1/2 WIDTH | MIX FOR CRACKS, JOINTS & FLGWYS | TEMP RAMP | MATERIAL TRANSFER DEVICE |
|---|---|---|---|---|---|---|---|---|---|---|---|---|
| STATION | TO | STATION | DESCRIPTION | FOOT | FOOT | TON | POUND | FOOT | FOOT | TON | SQ YD | TON |
| 515+00 | TO | 520+00 | SHOULDER WORK | 500 | | | 200 | | | 0.7 | | 0 |
| 520+00 | TO | 522+81 BK | TYPICAL 1 | 280.7 | | | 842 | 842 | | 0.4 | 13 | 178.1 |
| 522+83 AH | TO | 536+00 | TYPICAL 1 | 1317.06 | | | 3951 | 3951 | | 1.8 | 13 | 835.9 |
| 536+00 | TO | 551+00 | SN 038-0086 PATCH | 1500 | | | | | | | | 0 |
| 551+00 | TO | 551+55 BK | TYPICAL 1 | 54.76 | | | 164 | 164 | | 0.1 | 13 | 34.8 |
| 551+51 AH | TO | 584+57 | TYPICAL 1 | 3306.27 | | | 9919 | 9919 | | 4.4 | 13 | 2098.4 |
| 584+57 | TO | 585+64 | SN 038-0008 OMISSION | 106.67 | | | | | | | | 0 |
| 585+64 | TO | 591+77 | TYPICAL 2 | 613.48 | | | 2209 | 1840 | | 0.8 | 26 | 389.3 |
| 591+77 | TO | 593+51 | SN 038-0006 OMISSION | 174 | | | | | | | | 0 |
| 593+51 | TO | 603+93 | TYPICAL 2 | 1041.69 | | | 3750 | 3125 | | 1.4 | 26 | 661.1 |
| 603+93 | TO | 606+20 | SN 038-0004 OMISSION | 226.58 | | | | | | | | 0 |
| 606+20 | TO | 612+80 | TYPICAL 2 | 660.32 | | | 2377 | 1981 | | 0.9 | 13 | 419.1 |
| 612+80 | TO | 617+98 BK | TYPICAL 1 | 518.03 | | | 1554 | 1554 | | 0.7 | | 328.8 |
| 618+00 AH | TO | 630+40 | TYPICAL 1 | 1239.61 | | | 3719 | 3719 | | 1.7 | | 786.7 |
| 630+40 | TO | 633+25 | TYPICAL 4 | 284.94 | 285 | 7.1 | 1026 | 855 | | 0.5 | | 241.2 |
| 633+25 | TO | 636+83 | TYPICAL 4 | 358.01 | 120 | 3 | 1683 | 1074 | | 0.7 | | 378.7 |
| 636+83 | TO | 637+36 | TYPICAL 1 | 53.44 | | | 160 | 160 | | 0.1 | | 34 |
| 637+36 | TO | 644+00 | TYPICAL 1 | 664 | | | 1992 | 1992 | | 0.9 | 13 | 421.4 |
| 644+00 | TO | 651+00 | SN 038-0031 PATCH | 700 | | | | | | | | 0 |
| 651+00 | TO | 657+42 | TYPICAL 1 | 642 | | | 1926 | 1926 | | 0.9 | 13 | 407.4 |
| 657+42 | TO | 658+82 | TYPICAL 1 | 139.84 | | | 420 | 420 | | 0.2 | | 88.8 |
| 658+82 | TO | 661+09 | TYPICAL 4 | 227.26 | 194 | 4.8 | 989 | 682 | | 0.4 | | 240.4 |
| 661+09 | TO | 668+54 | TYPICAL 4 | 745.234 | 746 | 18.6 | 2683 | 2236 | | 1.2 | | 630.7 |
| 668+54 | TO | 669+13 BK | TYPICAL 1 | 58.286 | | | 175 | 175 | | 0.1 | | 37 |
| 669+13 AH | TO | 669+17 | TYPICAL 1 | 3.77 | | | 11 | 11 | | 0 | | 2.4 |
| 669+17 | TO | 697+13 | CURVE 13 | 2796.1 | | | 8388 | 8388 | | 3.7 | 13 | 1774.6 |
| 697+13 | TO | 698+03 | SN 038-0001 OMISSION | 90.04 | | | | | | | | 0 |
| 698+03 | TO | 705+60 | CURVE 13 | 757.1 | | | 2271 | 2271 | | 1 | 26 | 480.5 |
| 705+60 | TO | 709+10 | SN 038-0129 TAPER | 350 | | | | | | | | 0 |
| 709+10 | TO | 712+19 | CURVE 13 | 308.67 | | | 926 | 926 | | 0.4 | 13 | 195.9 |
| 712+19 | TO | 740+50 | TYPICAL 1 | 2831.33 | | | 8494 | 8494 | | 3.8 | | 1796.9 |
| SUBTOTAL | | | | | 1345 | 33.5 | 59829 | 56705 | 0 | 26.8 | 195 | 12462.1 |

MODEL: Default
FILE NAME: c:\pw_work\pwidot\cody.m.johnson@illinois.gov\d0874886\D366H62-schedules.dgn

| | | |
|---|---|---|
| USER NAME = Joseph.Zagar | DESIGNED - | REVISED - |
| | DRAWN - | REVISED - |
| PLOT SCALE = 100,000 ' / in. | CHECKED - | REVISED - |
| PLOT DATE = 1/4/2024 | DATE - | REVISED - |

**STATE OF ILLINOIS**
**DEPARTMENT OF TRANSPORTATION**

**SCHEDULES**

SCALE: | SHEET 1 OF 24 SHEETS | STA. | TO STA.

| F.A.I. RTE. | SECTION | COUNTY | TOTAL SHEETS | SHEET NO. |
|---|---|---|---|---|
| 57 | (38-6,38-5)RS,BRR,CLV | IROQUOIS | 213 | 34 |

CONTRACT NO. 66H62

ILLINOIS | FED. AID PROJECT

# MAINLINE SCHEDULE (3/4)

SOUTH OF STATION 740+50

NORTHBOUND LANES

| LOCATION | | | | LENGTH | RAMP/I-57 JOINT | | | | | | | |
|---|---|---|---|---|---|---|---|---|---|---|---|---|
| | | | | | LONG PARTIAL DEPTH REM 2.25" | LONG PARTIAL DEPTH PATCH | BIT MAT (TACK COAT) | LONG JOINT SEAL | LONG JOINT SEAL 1/2 WIDTH | MIX FOR CRACKS, JOINTS & FLGWYS | TEMP RAMP | MATERIAL TRANSFER DEVICE |
| STATION | TO | STATION | DESCRIPTION | FOOT | FOOT | TON | POUND | FOOT | FOOT | TON | SQ YD | TON |
| 740+50 | TO | 767+10 BK | TYPICAL 3 | 2660.0 | | | 9576 | 10640 | 2660 | 3.5 | | 1986 |
| 767+09 AH | TO | 767+13 | TYPICAL 3 | 3.8 | | | 14 | 15 | 4 | 0 | | 2.8 |
| 767+13 | TO | 777+86 | CURVE 14 | 1073.3 | | | 3864 | 4293 | 1073 | 1.4 | | 801.4 |
| 777+86 | TO | 785+46 | TYPICAL 4 | 760.0 | 760 | 18.9 | 3344 | 3040 | 760 | 1.2 | | 756.5 |
| 785+46 | TO | 787+47 | TYPICAL 4 | 200.6 | 210 | 5.2 | 1063 | 802 | 201 | 0.4 | | 249.6 |
| 787+47 | TO | 789+35 | CURVE 14 | 188.1 | | | 677 | 752 | 188 | 0.3 | | 140.5 |
| 789+35 | TO | 796+33 | CURVE 14 | 698.5 | | | 2514 | 2794 | 698 | 0.9 | | 521.5 |
| 796+33 | TO | 798+24 | TYPICAL 3 | 190.5 | | | 686 | 762 | 191 | 0.3 | | 142.3 |
| 798+24 | TO | 799+64 | SN 038-0048 TAPER | 140.0 | | | 504 | 560 | 140 | 0.2 | 31 | 104.5 |
| 799+64 | TO | 801+55 | SN 038-0048 OMISSION | 191.0 | | | | | | | | 0 |
| 801+55 | TO | 802+95 | SN 038-0048 TAPER | 140.0 | | | 504 | 560 | 140 | 0.2 | 31 | 104.5 |
| 802+95 | TO | 810+36 | TYPICAL 3 | 741.0 | | | 2668 | 2964 | 741 | 1 | | 553.2 |
| 810+36 | TO | 811+16 | TYPICAL 3 | 80.3 | | | 289 | 321 | 80 | 0.1 | | 60 |
| 811+16 | TO | 814+82 | TYPICAL 4 | 365.8 | 101 | 2.5 | 2085 | 1463 | 366 | 0.7 | | 455.2 |
| 814+82 | TO | 817+66 | TYPICAL 4 | 284.2 | 285 | 7.1 | 1250 | 1137 | 284 | 0.5 | | 282.9 |
| 817+66 | TO | 827+13 BK | TYPICAL 3 | 946.4 | | | 3407 | 3785 | 946 | 1.3 | | 706.6 |
| 827+12 AH | TO | 871+25 | TYPICAL 3 | 4412.8 | | | 15886 | 17651 | 4413 | 5.9 | | 3294.8 |
| 871+25 | TO | 905+95 | CURVE 15 | 3469.9 | | | 12491 | 13879 | 3470 | 4.6 | | 2590.8 |
| 905+95 | TO | 910+80 | TYPICAL 3 | 485.3 | | | 1747 | 1941 | 485 | 0.6 | 31 | 362.3 |
| SUBTOTAL | | | | | 1356 | 33.7 | 62569 | 67359 | 16840 | 23.1 | 93 | 13115.4 |

# MAINLINE SCHEDULE (4/4)

SOUTH OF STATION 740+50

SOUTHBOUND LANES

| LOCATION | | LENGTH | RAMP/I-57 JOINT | | | | | | | |
|---|---|---|---|---|---|---|---|---|---|---|
| | | | LONG PARTIAL DEPTH REM 2.25" | LONG PARTIAL DEPTH PATCH | BIT MAT (TACK COAT) | LONG JOINT SEAL | LONG JOINT SEAL 1/2 WIDTH | MIX FOR CRACKS, JOINTS & FLGWYS | TEMP RAMP | MATERIAL TRANSFER DEVICE |
| STATION TO STATION | DESCRIPTION | FOOT | FOOT | TON | POUND | FOOT | FOOT | TON | SQ YD | TON |
| 740+50 TO 767+10 BK | TYPICAL 3 | 2659.95 | | | 9576 | 10640 | 2660 | 3.5 | | 1986 |
| 767+09 AH TO 767+13 | TYPICAL 3 | 3.77 | | | 14 | 15 | 4 | 0 | | 2.8 |
| 767+13 TO 784+42 | CURVE 14 | 1728.47 | | | 6222 | 6914 | 1728 | 2.3 | | 1290.5 |
| 784+42 TO 787+15 | TYPICAL 4 | 273.22 | 274 | 6.8 | 1202 | 1093 | 273 | 0.4 | | 272 |
| 787+15 TO 790+72 | TYPICAL 4 | 357.43 | 81 | 2 | 2037 | 1430 | 357 | 0.7 | | 444.8 |
| 790+72 TO 791+50 | CURVE 14 | 77.78 | | | 280 | 311 | 78 | 0.1 | | 58 |
| 791+50 TO 796+33 | CURVE 14 | 483.47 | | | 1740 | 1934 | 483 | 0.6 | | 360.9 |
| 796+33 TO 798+24 | TYPICAL 3 | 190.53 | | | 686 | 762 | 191 | 0.3 | | 142.3 |
| 798+24 TO 799+64 | SN 038-0048 TAPER | 140 | | | 504 | 560 | 140 | 0.2 | 21 | 104.5 |
| 799+64 TO 801+55 | SN 038-0048 OMISSION | 191 | | | | | | | | 0 |
| 801+55 TO 802+95 | SN 038-0048 TAPER | 140 | | | 504 | 560 | 140 | 0.2 | 21 | 104.5 |
| 802+95 TO 810+73 | TYPICAL 3 | 778 | | | 2801 | 3112 | 778 | 1 | | 580.9 |
| 810+73 TO 811+62 | TYPICAL 3 | 88.91 | | | 320 | 356 | 89 | 0.1 | | 66.4 |
| 811+62 TO 815+20 | TYPICAL 4 | 357.93 | 290 | 7.2 | 1969 | 1432 | 358 | 0.7 | | 445.5 |
| 815+20 TO 822+70 | TYPICAL 4 | 749.9 | 750 | 18.7 | 3300 | 3000 | 750 | 1.2 | | 746.5 |
| 822+70 TO 827+13 BK | TYPICAL 3 | 442.87 | | | 1594 | 1771 | 443 | 0.6 | | 330.7 |
| 827+12 AH TO 871+25 | TYPICAL 3 | 4412.77 | | | 15886 | 17651 | 4413 | 5.9 | | 3294.8 |
| 871+25 TO 905+95 | CURVE 15 | 3469.86 | | | 12491 | 13879 | 3470 | 4.6 | | 2590.8 |
| 905+95 TO 910+80 | TYPICAL 3 | 485.29 | | | 1747 | 1941 | 485 | 0.6 | 21 | 362.3 |
| SUBTOTAL | | | 1395 | 34.7 | 62873 | 67361 | 16840 | 23 | 63 | 13184.2 |
| MAINLINE TOTAL | | | 5416 | 134.8 | 245113 | 248123 | 33680 | 99.6 | 546 | 51228.5 |

# RAMP SCHEDULE (1/2)

US24 INTERCHANGE

| LOCATION | | | | LENGTH | HMA SURF REM | | POLY HMA SC SMA 12.5 | POLY HMA BIND CSE, IL-4.75, N50 | | RAISED REF PM REFL REM | RAISED REFLECTIVE PAVEMENT MARKERS | | | MIX FOR CRACKS, JOINTS & FLGWYS | BIT MAT (TACK COAT) | LONG JOINT SEAL | AGG WEDGE SHLD TYPE B | MATERIAL TRANSFER DEVICE |
|---|---|---|---|---|---|---|---|---|---|---|---|---|---|---|---|---|---|---|
| | | | | | 3.25" | VAR DP | E N80 | 1.25" | VAR DP | | CRYSTAL RED | AMBER RED | 1-WAY CRYSTAL | | | | | |
| STATION | TO | STATION | DESCRIPTION | FOOT | SQ YD | SQ YD | TON | TON | TON | EACH | EACH | EACH | EACH | TON | POUND | FOOT | TON | TON |
| | | | **RAMP A** | | | | | | | | | | | | | | | |
| 0+00 | TO | 1+46 | TOP OF RAMP TO BUTT JOINT | 146.00 | | | | | | | | | | | | | | |
| 1+46 | TO | 1+59 | BUTT JOINT TO TOP OF 2ND CURVE | 13.36 | 42 | | 4.7 | 2.9 | | | | | | 0.01 | 28 | 14 | 0.2 | 7.6 |
| 1+59 | TO | 5+26 | TOP OF 2ND CURVE TO BOTTOM OF 2ND CURVE | 367.01 | 1142 | | 127.9 | 79.9 | | | | | | 0.34 | 771 | 368 | 4.6 | 207.8 |
| 5+26 | TO | 7+90 | BOTTOM OF 2ND CURVE TO TOP OF 1ST CURVE | 263.36 | 819 | | 91.8 | 57.4 | | | | | | 0.25 | 553 | 264 | 3.3 | 149.2 |
| 7+90 | TO | 12+20 | TOP OF 1ST CURVE TO GORE END | 430.27 | 1339 | | 149.9 | 93.7 | | | | | | 0.4 | 904 | 431 | 5.4 | 243.6 |
| 12+20 | TO | 12+64 | GORE END TO SURFACE TAPER (MAINLINE) | 44.00 | 137 | | 15.3 | 9.6 | | | | | | 0.04 | 92 | 44 | 0.6 | 24.9 |
| 12+64 | TO | 13+38 | SURFACE TAPER (MAINLINE) TO SURFACE TAPER (RAMP) | 74.00 | | 230 | 25.8 | | 22.5 | | | | | 0.07 | 155 | 74 | 0.9 | 48.3 |
| 13+38 | TO | 15+96 | SURFACE TAPER (RAMP) TO GORE POINT | 258.00 | | | | | | | | | | | | | | |
| 15+96 | TO | 23+18 | GORE POINT TO BOTTOM OF RAMP | 722.40 | | | | | | | | | | | | | | |
| | | | **RAMP B** | | | | | | | | | | | | | | | |
| 0+00 | TO | 3+00 | BOTTOM OF RAMP TO GORE POINT | 300.00 | | | | | | 10 | 15 | | 4 | | | | | |
| 3+00 | TO | 6+50 | GORE POINT TO SURFACE TAPER (MAINLINE) | 350.00 | | | | | | 21 | 27 | | 14 | | | | | |
| 6+50 | TO | 7+20 | SURFACE TAPER (MAINLINE) TO SURFACE TAPER (RAMP) | 70.00 | | 218 | 24.4 | | 21.4 | 5 | 6 | | 3 | 0.07 | 147 | 70 | 0.9 | 45.8 |
| 7+20 | TO | 11+94 | SURFACE TAPER (RAMP) TO TOP OF 1ST CURVE | 474.29 | 1476 | | 165.3 | 103.3 | | 12 | 12 | 12 | | 0.44 | 996 | 475 | 6 | 268.6 |
| 11+94 | TO | 14+57 | TOP OF 1ST CURVE TO BOTTOM OF 2ND CURVE | 263.03 | 818 | | 91.7 | 57.3 | | 4 | 4 | 4 | | 0.25 | 552 | 264 | 3.3 | 149 |
| 14+57 | TO | 16+85 | BOTTOM OF 2ND CURVE TO TOP OF 2ND CURVE | 227.83 | 709 | | 79.4 | 49.6 | | 6 | 6 | 6 | | 0.21 | 478 | 228 | 2.9 | 129 |
| 16+85 | TO | 17+60 | TOP OF 2ND CURVE TO BUTT JOINT | 74.85 | 233 | | 26.1 | 16.3 | | 2 | 2 | 2 | | 0.07 | 157 | 75 | 0.9 | 42.4 |
| 17+60 | TO | 19+18 | BUTT JOINT TO TOP OF RAMP | 158.17 | | | | | | | | | | | | | | |
| | | | **RAMP C** | | | | | | | | | | | | | | | |
| 0+00 | TO | 3+00 | BOTTOM OF RAMP TO GORE POINT | 300.00 | | | | | | 10 | 15 | | 4 | | | | | |
| 3+00 | TO | 6+43 | GORE POINT TO SURFACE TAPER (MAINLINE) | 343.00 | | | | | | 20 | 26 | | 13 | | | | | |
| 6+43 | TO | 7+13 | SURFACE TAPER (MAINLINE) TO SURFACE TAPER (RAMP) | 70.00 | | 218 | 24.4 | | 21.4 | 5 | 6 | | 3 | 0.07 | 147 | 70 | 0.9 | 45.8 |
| 7+13 | TO | 11+96 | SURFACE TAPER (RAMP) TO TOP OF 1ST CURVE | 482.73 | 1502 | | 168.2 | 105.1 | | 13 | 13 | 13 | | 0.45 | 1014 | 483 | 6.1 | 273.3 |
| 11+96 | TO | 14+60 | TOP OF 1ST CURVE TO BOTTOM OF 2ND CURVE | 263.81 | 821 | | 91.9 | 57.5 | | 4 | 4 | 4 | | 0.25 | 554 | 264 | 3.3 | 149.4 |
| 14+60 | TO | 16+91 | BOTTOM OF 2ND CURVE TO TOP OF 2ND CURVE | 231.84 | 721 | | 80.8 | 50.5 | | 6 | 6 | 6 | | 0.22 | 487 | 232 | 2.9 | 131.3 |
| 16+91 | TO | 17+67 | TOP OF 2ND CURVE TO BUTT JOINT | 75.62 | 235 | | 26.3 | 16.5 | | 2 | 2 | 2 | | 0.07 | 159 | 76 | 1 | 42.8 |
| 17+67 | TO | 19+18 | BUTT JOINT TO TOP OF RAMP | 151.29 | | | | | | | | | | | | | | |
| | | | **RAMP D** | | | | | | | | | | | | | | | |
| 0+00 | TO | 1+47 | TOP OF RAMP TO BUTT JOINT | 147.00 | | | | | | | | | | | | | | |
| 1+47 | TO | 1+60 | BUTT JOINT TO TOP OF 2ND CURVE | 12.76 | 40 | | 4.4 | 2.8 | | | | | | 0.01 | 27 | 13 | 0.2 | 7.2 |
| 1+60 | TO | 5+24 | TOP OF 2ND CURVE TO BOTTOM OF 2ND CURVE | 363.75 | 1132 | | 126.7 | 79.2 | | | | | | 0.34 | 764 | 364 | 4.6 | 205.9 |
| 5+24 | TO | 7+87 | BOTTOM OF 2ND CURVE TO TOP OF 1ST CURVE | 263.37 | 819 | | 91.8 | 57.4 | | | | | | 0.25 | 553 | 264 | 3.3 | 149.2 |
| 7+87 | TO | 11+96 | TOP OF 1ST CURVE TO GORE END | 409.12 | 1273 | | 142.6 | 89.1 | | | | | | 0.38 | 859 | 410 | 5.2 | 231.7 |
| 11+96 | TO | 12+56 | GORE END TO SURFACE TAPER (RAMP) | 60.00 | 187 | | 20.9 | 13.1 | | | | | | 0.06 | 126 | 60 | 0.8 | 34 |
| 12+56 | TO | 13+30 | SURFACE TAPER (RAMP) TO SURFACE TAPER (MAINLINE) | 74.00 | | 230 | 25.8 | | 22.5 | | | | | 0.07 | 155 | 74 | 0.9 | 48.3 |
| 13+30 | TO | 13+65 | SURFACE TAPER (MAINLINE) TO BOTTOM OF 1ST CURVE | 35.25 | | | | | | | | | | | | | | |
| 13+65 | TO | 15+74 | BOTTOM OF 1ST CURVE TO GORE POINT | 208.75 | | | | | | | | | | | | | | |
| 15+74 | TO | 23+02 | GORE POINT TO BOTTOM OF RAMP | 727.59 | | | | | | | | | | | | | | |
| US-24 INTERCHANGE SUBTOTAL | | | | 8456.45 | 13445 | 896 | 1606.1 | 941.2 | 87.8 | 120 | 234 | | | 4.32 | 9678 | 4617 | 58.2 | 2635.1 |

# RAMP SCHEDULE (2/2)

IL54 INTERCHANGE

| LOCATION | | | | LENGTH | HMA SURF REM | | POLY HMA SC SMA 12.5 | POLY HMA BIND CSE, IL-4.75, N50 | | RAISED REF PM REFL REM | RAISED REFLECTIVE PAVEMENT MARKERS | | | MIX FOR CRACKS, JOINTS & FLGWYS | BIT MAT (TACK COAT) | LONG JOINT SEAL | AGG WEDGE SHLD TYPE B | MATERIAL TRANSFER DEVICE |
|---|---|---|---|---|---|---|---|---|---|---|---|---|---|---|---|---|---|---|
| | | | | | 3.25" | VAR DP | E N80 | 1.25" | VAR DP | | CRYSTAL RED | AMBER RED | 1-WAY CRYSTAL | | | | | |
| STATION | TO | STATION | DESCRIPTION | FOOT | SQ YD | SQ YD | TON | TON | TON | EACH | EACH | EACH | EACH | TON | POUND | FOOT | TON | TON |
| | | | **RAMP A** | | | | | | | | | | | | | | | |
| 0+00 | TO | 1+15 | TOP OF RAMP TO BUTT JOINT | 115.00 | | | | | | | | | | | | | | |
| 1+15 | TO | 1+59 | BUTT JOINT TO TOP OF 2ND CURVE | 44.36 | 138 | | 15.5 | 9.7 | | | | | | 0.04 | 93 | 45 | 0.6 | 25.2 |
| 1+59 | TO | 5+19 | TOP OF 2ND CURVE TO BOTTOM OF 2ND CURVE | 359.33 | 1118 | | 125.2 | 78.3 | | | | | | 0.34 | 755 | 360 | 4.5 | 203.5 |
| 5+19 | TO | 7+82 | BOTTOM OF 2ND CURVE TO TOP OF 1ST CURVE | 263.00 | 818 | | 91.6 | 57.3 | | | | | | 0.25 | 552 | 263 | 3.3 | 148.9 |
| 7+82 | TO | 12+93 | TOP OF 1ST CURVE TO GORE END | 511.31 | 1591 | | 178.2 | 111.4 | | | | | | 0.48 | 1074 | 512 | 6.5 | 289.6 |
| 12+93 | TO | 13+95 | GORE END TO SURFACE TAPER (RAMP) | 102.00 | 317 | | 35.5 | 22.2 | | | | | | 0.1 | 214 | 102 | 1.3 | 57.7 |
| 13+95 | TO | 14+69 | SURFACE TAPER (RAMP) TO SURFACE TAPER (MAINLINE) | 74.00 | | 230 | 25.8 | | 27.4 | | | | | 0.07 | 155 | 74 | 0.9 | 53.2 |
| 14+69 | TO | 16+70 | SURFACE TAPER (MAINLINE) TO GORE POINT | 201.00 | | | | | | | | | | | | | | |
| 16+70 | TO | 24+13 | GORE POINT TO BOTTOM OF RAMP | 742.68 | | | | | | | | | | | | | | |
| | | | **RAMP B** | | | | | | | | | | | | | | | |
| 0+00 | TO | 2+88 | BOTTOM OF RAMP TO GORE POINT | 288.00 | | | | | | 10 | 15 | | 4 | | | | | |
| 2+88 | TO | 5+30 | GORE POINT TO SURFACE TAPER (MAINLINE) | 242.00 | | | | | | 15 | 19 | | 10 | | | | | |
| 5+30 | TO | 6+00 | SURFACE TAPER (MAINLINE) TO SURFACE TAPER (RAMP) | 70.00 | | 218 | 24.4 | | 25.9 | 5 | 6 | | 3 | 0.07 | 147 | 70 | 0.9 | 50.3 |
| 6+00 | TO | 6+62 | SURFACE TAPER (RAMP) TO BOTTOM OF 1ST CURVE | 62.40 | 194 | | 21.7 | 13.6 | | 4 | 5 | | 3 | 0.06 | 131 | 63 | 0.8 | 35.3 |
| 6+62 | TO | 7+24 | BOTTOM OF 1ST CURVE TO GORE END | 61.60 | 192 | | 21.5 | 13.4 | | 2 | 2 | 2 | | 0.06 | 129 | 62 | 0.8 | 34.9 |
| 7+24 | TO | 11+92 | GORE END TO TOP OF 1ST CURVE | 467.66 | 1455 | | 163 | 101.8 | | 12 | 12 | 12 | | 0.44 | 982 | 468 | 5.9 | 264.8 |
| 11+92 | TO | 14+55 | TOP OF 1ST CURVE TO BOTTOM OF 2ND CURVE | 263.00 | 818 | | 91.6 | 57.3 | | 4 | 4 | 4 | | 0.25 | 552 | 263 | 3.3 | 148.9 |
| 14+55 | TO | 16+55 | BOTTOM OF 2ND CURVE TO TOP OF 2ND CURVE | 200.64 | 624 | | 69.9 | 43.7 | | 6 | 6 | 6 | | 0.19 | 421 | 201 | 2.5 | 113.6 |
| 16+55 | TO | 17+55 | TOP OF 2ND CURVE TO BUTT JOINT | 99.70 | 310 | | 34.7 | 21.7 | | 3 | 3 | 3 | | 0.09 | 209 | 100 | 1.3 | 56.4 |
| 17+55 | TO | 18+89 | BUTT JOINT TO TOP OF RAMP | 134.23 | | | | | | | | | | | | | | |
| | | | **RAMP C** | | | | | | | | | | | | | | | |
| 0+00 | TO | 2+72 | BOTTOM OF RAMP TO GORE POINT | 272.00 | | | | | | 9 | 14 | | 4 | | | | | |
| 2+72 | TO | 5+31 | GORE POINT TO SURFACE TAPER (MAINLINE) | 259.00 | | | | | | 15 | 20 | | 10 | | | | | |
| 5+31 | TO | 6+01 | SURFACE TAPER (MAINLINE) TO SURFACE TAPER (RAMP) | 70.00 | | 218 | 24.4 | | 25.9 | 5 | 6 | | 3 | 0.07 | 147 | 70 | 0.9 | 50.3 |
| 6+01 | TO | 6+69 | SURFACE TAPER (RAMP) TO BOTTOM OF 1ST CURVE | 67.88 | 211 | | 23.7 | 14.8 | | 5 | 6 | | 3 | 0.06 | 143 | 68 | 0.9 | 38.5 |
| 6+69 | TO | 7+18 | BOTTOM OF 1ST CURVE TO GORE END | 49.12 | 153 | | 17.1 | 10.7 | | 2 | 2 | 2 | | 0.05 | 103 | 50 | 0.6 | 27.8 |
| 7+18 | TO | 11+36 | GORE END TO TOP OF 1ST CURVE | 418.07 | 1301 | | 145.7 | 91 | | 11 | 11 | 11 | | 0.39 | 878 | 419 | 5.3 | 236.7 |
| 11+36 | TO | 13+98 | TOP OF 1ST CURVE TO BOTTOM OF 2ND CURVE | 261.93 | 815 | | 91.3 | 57 | | 4 | 4 | 4 | | 0.24 | 550 | 262 | 3.3 | 148.3 |
| 13+98 | TO | 16+22 | BOTTOM OF 2ND CURVE TO TOP OF 2ND CURVE | 223.75 | 696 | | 78 | 48.7 | | 6 | 6 | 6 | | 0.21 | 470 | 224 | 2.8 | 126.7 |
| 16+22 | TO | 17+53 | TOP OF 2ND CURVE TO BUTT JOINT | 131.25 | 408 | | 45.7 | 28.6 | | 4 | 4 | 4 | | 0.12 | 276 | 132 | 1.7 | 74.3 |
| 17+53 | TO | 18+53 | BUTT JOINT TO TOP OF RAMP | 100.29 | | | | | | | | | | | | | | |
| | | | **RAMP D** | | | | | | | | | | | | | | | |
| 0+00 | TO | 1+23 | TOP OF RAMP TO BUTT JOINT | 123.00 | | | | | | | | | | | | | | |
| 1+23 | TO | 1+60 | BUTT JOINT TO TOP OF 2ND CURVE | 36.97 | 115 | | 12.9 | 8.1 | | | | | | 0.03 | 78 | 37 | 0.5 | 21 |
| 1+60 | TO | 5+56 | TOP OF 2ND CURVE TO BOTTOM OF 2ND CURVE | 396.06 | 1232 | | 138 | 86.3 | | | | | | 0.37 | 832 | 397 | 5 | 224.3 |
| 5+56 | TO | 8+18 | BOTTOM OF 2ND CURVE TO TOP OF 1ST CURVE | 262.28 | 816 | | 91.4 | 57.1 | | | | | | 0.24 | 551 | 263 | 3.3 | 148.5 |
| 8+18 | TO | 12+32 | TOP OF 1ST CURVE TO GORE END | 413.69 | 1287 | | 144.1 | 90.1 | | | | | | 0.39 | 869 | 414 | 5.2 | 234.2 |
| 12+32 | TO | 13+30 | GORE END TO SURFACE TAPER (RAMP) | 98.00 | 305 | | 34.1 | 21.3 | | | | | | 0.09 | 206 | 98 | 1.2 | 55.4 |
| 13+30 | TO | 14+04 | SURFACE TAPER (RAMP) TO SURFACE TAPER (MAINLINE) | 74.00 | | 230 | 25.8 | | 27.4 | | | | | 0.07 | 155 | 74 | 0.9 | 53.2 |
| 14+04 | TO | 16+61 | SURFACE TAPER (MAINLINE) TO GORE POINT | 257.00 | | | | | | | | | | | | | | |
| 16+61 | TO | 24+36 | GORE POINT TO BOTTOM OF RAMP | 775.25 | | | | | | | | | | | | | | |
| IL-54 INTERCHANGE SUBTOTAL | | | | 8591.45 | 14914 | 896 | 1770.8 | 1044.1 | 106.6 | 122 | 239 | | | 4.77 | 10672 | 5091 | 64.2 | 2921.5 |
| TOTAL | | | | 17047.90 | 28359 | 1792 | 3376.9 | 2179.7 | | 242 | 473 | | | 9.09 | 20350 | 9708 | 122.4 | 5556.6 |

MODEL: Default
FILE NAME: c:\pw_workingdot\cody.m.johnson@illinois.gov\d0874886\D366H62-schedules.dgn

| | | | |
|---|---|---|---|
| USER NAME = Joseph.Zagar | DESIGNED - | REVISED - | |
| | DRAWN - | REVISED - | |
| PLOT SCALE = 100.000 ' / in. | CHECKED - | REVISED - | |
| PLOT DATE = 1/4/2024 | DATE - | REVISED - | |

**STATE OF ILLINOIS**
**DEPARTMENT OF TRANSPORTATION**

**SCHEDULES**

SCALE: | SHEET 1 OF 24 SHEETS | STA. | TO STA.

| F.A.I. RTE. | SECTION | COUNTY | TOTAL SHEETS | SHEET NO. |
|---|---|---|---|---|
| 57 | (38-6,38-5)RS,BRR,CLV | IROQUOIS | 213 | 38 |

CONTRACT NO. 66H62

ILLINOIS | FED. AID PROJECT

# RIPRAP CHUTE SCHEDULE

| LOCATION | | STONE RIPRAP, CLASS A3 | FILTER FABRIC | COMB C&G REMOV SPL | CLASS C PATCHES TYPE I 16 | CLASS D PATCHES TYPE III 10 INCH | REMOVING INLETS |
|---|---|---|---|---|---|---|---|
| NB/SB | STATION | SQ YD | SQ YD | FOOT | SQ YD | SQ YD | EACH |
| SB | 585+80 | 62.2 | 62.2 | 18 | 3 | | 1 |
| NB | 585+83 | 57.8 | 57.8 | 18 | 3 | | 1 |
| SB | 588+70 | 53.3 | 53.3 | 16 | | 17 | 1 |
| NB | 588+73 | 49.8 | 49.8 | 16 | | 17 | 1 |
| NB | 591+55 | 72.2 | 72.2 | 18 | | 17 | 1 |
| SB | 591+55 | 62.2 | 62.2 | 18 | | 17 | 1 |
| NB | 593+68 | 71.1 | 71.1 | 18 | | 17 | 1 |
| SB | 593+70 | 77.8 | 77.8 | 18 | | 17 | 1 |
| NB | 597+32 | 69.3 | 69.3 | 16 | | 17 | 1 |
| SB | 597+32 | 60.4 | 60.4 | 16 | | 17 | 1 |
| NB | 602+63 | 58.7 | 58.7 | 16 | | 17 | 1 |
| SB | 604+00 | 86.7 | 86.7 | 18 | | 17 | 1 |
| NB | 605+30 | 88.9 | 88.9 | 18 | | 17 | 1 |
| SB | 606+60 | 83.3 | 83.3 | 18 | | 17 | 1 |
| NB | 608+63 | 53.3 | 53.3 | 16 | | 17 | 1 |
| SB | 609+30 | 49.8 | 49.8 | 16 | | 17 | 1 |
| NB | 612+00 | 60.0 | 60.0 | 18 | | 17 | 1 |
| SB | 612+00 | 49.8 | 49.8 | 16 | | 17 | 1 |
| | TOTAL | 1167 | 1167 | 308 | 6 | 272 | 18 |

# DRAINAGE REPAIR SCHEDULE

| | LOCATION | | | | | | | DESCRIPTION OF WORK | TREE REMOV 6-15 | TREE REMOV OVER 15 | TRENCH BACK-FILL | STONE RIPRAP CL A4 | FILTER FABRIC | PIPE CLVRT REM | END SEC 30 | TRVRS PIPE GRT CON ES | PIPE CLVRT CL D 3 24" | PRC FLAR END SEC 24" | PRC FLAR END SEC 36" | CONC HDWL REMOV | METAL FL END SEC 24" | INSERT CUL LIN 36 | REM INLET -MAIN FLOW | PIPE CULV CL 24 | REM & RELAY P C SPL |
|---|---|---|---|---|---|---|---|---|---|---|---|---|---|---|---|---|---|---|---|---|---|---|---|---|---|
| | STA | OS | RT/LT | ID | INVERT EL | MAT TYPE | SIZE INCHES | | UNIT | UNIT | CU YD | SQ YD | SQ YD | FOOT | EACH | FOOT | FOOT | EACH | EACH | EACH | EACH | FOOT | EACH | FOOT | FOOT |
| | 569+50 | 43.25 | RT | 5086 | 651.54 | RCP/CMP | 36 | PLACE 8 SY OF RR4 AND FILTER FABRIC AT WEST END | | | | 8 | 8 | | | | | | | | | | | | |
| | 584+82 | 83/82 | LT/RT | 5089 | 646.3/647.1 | RCP/CMP | 36 | 30" SMOOTH INT LINER. | | | | | | | | | | | | | | 165 | | | |
| | 585+42 | 95/94 | LT/RT | 5090 | 645.6/646.5 | RCP/CMP | 36 | 30" SMOOTH INT LINER REPLACE WEST END SECTION | | | | | | | 1 | | | | | | | 189 | | | |
| * | 594+25 | 128 | LT | 5092 | 648.7 | RCP/CMP | 24 | REPLACE CMP PORTION. ADD 8 SY RR4 AND FILTER FABRIC AT OUTLET | | | 53 | | | 64 | | | 64 | | | 1 | 1 | | | | |
| * | 610+00 | CL | LT/RT | 3948 | 667.33 | RCP | 24 | PLACE 4 SY OF RR4 & FF NORTH OF MEDIAN INLET. REMOVE TREES BY OUTLET. | 20 | 20 | | 4 | 4 | | | | | | | | | | | | |
| * | 622+00 | CL | LT/RT | 3947 | 652.96/653.47 | RCP/CMP | 30/24 | REMOVE MEDIAN DRAINS AND PIPE END SECTIONS. STD. 542001 STD. 542311. | | | | | | 10 | 2 | 15 | | | | | | | 2 | | |
| *+ | 17+50 | 82 | RT | 3943 | 656.72 | RCP | 24 | REATTACH SEPARATION FIRST JOINT WEST END | | | | | | | | | | 1 | | 1 | | | | | 10 |
| * | 661+00 | CL | RT | 3940 | 657.81 | RCP | 24 | REATTACH PIPE SECTIONS AT THE FIRST TWO JOINTS EAST END | | | | | | | | | | 1 | | 1 | | | | | 18 |
| | 689+00 | CL | LT/RT | 3938 | 649.93 | RCP | 24 | 4 SY RR4 AND FF AROUND MEDIAN INLET | | | | 4 | 4 | | | | | | | | | | | | |
| * | 703+00 | 107.5 | LT | 3937 | 653.78/647.45 | RCP/CMP | 24 | REPLACE CMP PORTION AND PLACE 8 SY RR4 AND FF AT OUTLET | | | 34 | 8 | 8 | 44 | | | 44 | | | | 1 | | | | |
| * | 711+50 | 105.5 | LT | 3932 | 652.79 | RCP | 24 | REATTACH PIPE JOINT EAST END | | | | | | | | | | 1 | | 1 | | | | | 10 |
| * | 766+00 | 93.5 | LT | 3927 | 658.71 | RCP | 24 | REATTACH PIPE JOINT AT EAST END | | | | | | | | | | 1 | | 1 | | | | | 10 |
| * | 793+42 | CL | LT | 3926 | 661.35 | RCP | 36 | REATTACH PIPE AT FIRST JOINT EAST OF THE MEDIAN INLET | | | | | | | | | | | 1 | 1 | | | | | 8 |
| *++ | 009+00 | 73 | RT | 3925 | 662.15 | RCP | 36 | REATTACH PIPE AT THE SECOND JOINT WEST END | | | | | | | | | | | 1 | 1 | | | | | 18 |
| +++ | 11+00 | 66 | RT | 3916 | 667.6 | RCP | 24 | CLEAN EAST END SECTION | | | | | | | | | | | | | | | | 66 | |
| | 853+83 | 86 | RT | 3910 | 661.47 | RCP | 36 | REPLACE GRATE STD. 542311 WEST END SECTION | | | | | | | | 15 | | | | | | | | | |
| | 885+00 | 90/94 | LT/RT | 3907 | 658.5/658.10 | RCP | 36 | REPLACE GRATE STD. 542311 END SECTIONS | | | | | | | | 30 | | | | | | | | | |
| | | | | | | | | TOTAL | 20 | 20 | 87 | 24 | 24 | 118 | 3 | 60 | 108 | 4 | 2 | 7 | 2 | 354 | 2 | 66 | 74 |

*SEEDING INCLUDED ON EARTHWORK SCHEDULE

+ US24 RAMP C

++ IL54 RAMP C

+++ IL54 RAMP D

MODEL: Default
FILE NAME: c:\pw_work\pwidot\cody.m.johnson@illinois.gov\d0874886\D366H62-schedules.dgn

| | | | |
|---|---|---|---|
| USER NAME = Cody.M.Johnson | DESIGNED - | REVISED - | |
| | DRAWN - | REVISED - | |
| PLOT SCALE = 100.000 ' / in. | CHECKED - | REVISED - | |
| PLOT DATE = 1/19/2024 | DATE - | REVISED - | |

**STATE OF ILLINOIS**
**DEPARTMENT OF TRANSPORTATION**

**SCHEDULES**

SCALE: | SHEET 1 OF 24 SHEETS | STA. | TO STA.

| F.A.I. RTE. | SECTION | COUNTY | TOTAL SHEETS | SHEET NO. |
|---|---|---|---|---|
| 57 | (38-6,38-5)RS,BRR,CLV | IROQUOIS | 213 | 40 |

CONTRACT NO. 66H62

ILLINOIS | FED. AID PROJECT

# CLASS A PATCHING SCHEDULE (1/2)

SOUTHBOUND: STA 520+00 = LOG MI. 0.0

| LOCATION | | LANE | PATCH LENGTH | PATCH WIDTH | PATCH AREA | CLASS A PATCHING TYPE II 13 INCH | TYPE III 13 INCH | TYPE IV 13 INCH | TYPE II 15 INCH | TYPE III 15 INCH | TYPE IV 15 INCH | PATCH REINF | SAW CUTS | TIE BARS 3/4" | TIE BARS 1" |
|---|---|---|---|---|---|---|---|---|---|---|---|---|---|---|---|
| STATION | LOG MI. | PASS/DRIVE | FOOT | FOOT | SQ YD | SQ YD | SQ YD | SQ YD | SQ YD | SQ YD | SQ YD | SQ YD | FOOT | EACH | EACH |
| PASSING LANE : STA 520+00 = LOG MI. 0.0 | | | | | | | | | | | | | | | |
| 534+60 | 0.3 | PL | 10 | 12 | 13.3 | | | | 13.3 | | | 13.3 | 44 | | 22 |
| 552+40 | 0.6 | PL | 10 | 12 | 13.3 | | | | 13.3 | | | 13.3 | 44 | | 22 |
| 583+50 | 1.2 | PL | 6 | 12 | 8 | | | | 8 | | | 8 | 36 | | 22 |
| 591+20 | 1.4 | PL | 10 | 12 | 13.3 | 13.3 | | | | | | 13.3 | 44 | | 22 |
| 594+95 | 1.4 | PL | 10 | 12 | 13.3 | 13.3 | | | | | | 13.3 | 44 | | 22 |
| 596+00 | 1.4 | PL | 8 | 12 | 10.7 | 10.7 | | | | | | 10.7 | 40 | | 22 |
| 599+20 | 1.5 | PL | 15 | 12 | 20 | | 20 | | | | | 20 | 54 | | 22 |
| 606+95 | 1.7 | PL | 6 | 12 | 8 | 8 | | | | | | 8 | 36 | | 22 |
| 609+20 | 1.7 | PL | 6 | 12 | 8 | 8 | | | | | | 8 | 36 | | 22 |
| 611+85 | 1.7 | PL | 10 | 12 | 13.3 | 13.3 | | | | | | 13.3 | 44 | | 22 |
| 622+95 | 2.0 | PL | 12 | 12 | 16 | | | | | 16 | | 16 | 48 | | 22 |
| 663+10 | 2.7 | PL | 8 | 12 | 10.7 | | | | 10.7 | | | 10.7 | 40 | | 22 |
| 665+20 | 2.8 | PL | 10 | 12 | 13.3 | | | | 13.3 | | | 13.3 | 44 | | 22 |
| 677+35 | 3.0 | PL | 6 | 12 | 8 | | | | 8 | | | 8 | 36 | | 22 |
| 689+50 | 3.2 | PL | 6 | 12 | 8 | | | | 8 | | | 8 | 36 | | 22 |
| 757+10 | 4.5 | PL | 20 | 12 | 26.7 | | | 26.7 | | | | 26.7 | 64 | | 22 |
| 757+65 | 4.8 | PL | 20 | 12 | 26.7 | | | 26.7 | | | | 26.7 | 64 | | 22 |
| 782+95 | 5.0 | PL | 6 | 12 | 8 | 8 | | | | | | 8 | 36 | | 22 |
| 803+55 | 5.4 | PL | 6 | 12 | 8 | 8 | | | | | | 8 | 36 | | 22 |
| PASSING LANE TOTAL | | | | | 246.6 | 82.6 | 20 | 53.4 | 74.6 | 16 | 0 | 246.6 | 826 | 0 | 418 |
| DRIVING LANE | | | | | | | | | | | | | | | |
| 548+55 | 0.6 | DL | 10 | 12 | 13.3 | | | | 13.3 | | | 13.3 | 44 | | 22 |
| 579+10 | 1.1 | DL | 10 | 12 | 13.3 | | | | 13.3 | | | 13.3 | 44 | | 22 |
| 596+00 | 1.4 | DL | 8 | 12 | 10.7 | 10.7 | | | | | | 10.7 | 40 | | 22 |
| 599+20 | 1.5 | DL | 6 | 12 | 8 | 8 | | | | | | 8 | 36 | | 22 |
| 605+00 | 1.7 | DL | 6 | 12 | 8 | 8 | | | | | | 8 | 36 | | 22 |
| 609+20 | 1.7 | DL | 6 | 12 | 8 | 8 | | | | | | 8 | 36 | | 22 |
| 611+85 | 1.7 | DL | 10 | 12 | 13.3 | 13.3 | | | | | | 13.3 | 44 | | 22 |
| 612+40 | 1.8 | DL | 10 | 12 | 13.3 | 13.3 | | | | | | 13.3 | 44 | | 22 |
| 689+50 | 3.2 | DL | 6 | 12 | 8 | | | | 8 | | | 8 | 36 | | 22 |
| 691+10 | 3.2 | DL | 6 | 12 | 8 | | | | 8 | | | 8 | 36 | | 22 |
| 752+35 | 4.4 | DL | 40 | 12 | 53.3 | | | 53.3 | | | | 53.3 | 104 | 13 | 22 |
| 757+10 | 4.5 | DL | 20 | 12 | 26.7 | | | 26.7 | | | | 26.7 | 64 | | 22 |
| 823+60 | 5.8 | DL | 10 | 12 | 13.3 | 13.3 | | | | | | 13.3 | 44 | | 22 |
| 846+30 | 6.2 | DL | 6 | 12 | 8 | 8 | | | | | | 8 | 36 | | 22 |
| 870+05 | 6.6 | DL | 10 | 12 | 13.3 | 13.3 | | | | | | 13.3 | 44 | | 22 |
| 888+00 | 7.0 | DL | 6 | 12 | 8 | 8 | | | | | | 8 | 36 | | 22 |
| DRIVING LANE TOTAL | | | | | 226.5 | 103.9 | 0 | 80 | 42.6 | 0 | 0 | 226.5 | 724 | 13 | 352 |
| SOUTHBOUND SUBTOTAL | | | | | 473 | 187 | 20 | 133 | 117 | 16 | 0 | 473 | 1550 | 13 | 770 |

MODEL: Default
FILE NAME: c:\pw_work\pwidot\ferguson\hd0874886\D366H62-schedules.dgn

| | | | |
|---|---|---|---|
| USER NAME = Brandon.Dyer | DESIGNED - | REVISED - | STATE OF ILLINOIS DEPARTMENT OF TRANSPORTATION |
| | DRAWN - | REVISED - | |
| PLOT SCALE = 100.000 ' / in. | CHECKED - | REVISED - | |
| PLOT DATE = 12/15/2023 | DATE - | REVISED - | |

SCHEDULES

SCALE: | SHEET 1 OF 24 SHEETS | STA. | TO STA.

| F.A.I. RTE. | SECTION | COUNTY | TOTAL SHEETS | SHEET NO. |
|---|---|---|---|---|
| 57 | (38-6,38-5)RS,BRR,CLV | IROQUOIS | 213 | 41 |

CONTRACT NO. 66H62

ILLINOIS | FED. AID PROJECT

# CLASS A PATCHING SCHEDULE (2/2)

NORTHBOUND STATION 910=80 = LOG MI. 0.0

| LOCATION | | LANE | PATCH LENGTH | PATCH WIDTH | PATCH AREA | CLASS A PATCHING TYPE II 13 INCH | TYPE III 13 INCH | TYPE IV 13 INCH | TYPE II 15 INCH | TYPE III 15 INCH | TYPE IV 15 INCH | PATCH REINF | SAW CUTS | TIE BARS 3/4" | TIE BARS 1" |
|---|---|---|---|---|---|---|---|---|---|---|---|---|---|---|---|
| STATION | LOG MI. | PASS/DRIVE | FOOT | FOOT | SQ YD | SQ YD | SQ YD | SQ YD | SQ YD | SQ YD | SQ YD | SQ YD | FOOT | EACH | EACH |
| PASSING LANE | | | | | | | | | | | | | | | |
| 551+30 | 7.4 | PL | 10 | 12 | 13.3 | | | | 13.3 | | | 13.3 | 44 | | 22 |
| 565+90 | 7.0 | PL | 8 | 12 | 10.7 | | | | 10.7 | | | 10.7 | 40 | | 22 |
| 583+50 | 6.7 | PL | 6 | 12 | 8 | | | | 8 | | | 8 | 36 | | 22 |
| 596+55 | 6.4 | PL | 6 | 12 | 8 | 8 | | | | | | 8 | 36 | | 22 |
| 606+95 | 6.2 | PL | 6 | 12 | 8 | 8 | | | | | | 8 | 36 | | 22 |
| 608+70 | 6.2 | PL | 6 | 12 | 8 | 8 | | | | | | 8 | 36 | | 22 |
| 625+60 | 5.9 | PL | 6 | 12 | 8 | | | | 8 | | | 8 | 36 | | 22 |
| 651+35 | 5.4 | PL | 6 | 12 | 8 | | | | 8 | | | 8 | 36 | | 22 |
| 661+50 | 5.2 | PL | 80 | 12 | 106.7 | | | | | | 106.7 | 106.7 | 184 | 27 | 22 |
| 677+35 | 4.9 | PL | 30 | 12 | 40 | | | | | | 40 | 40 | 84 | 10 | 22 |
| 689+50 | 4.7 | PL | 12 | 12 | 16 | | | | | 16 | | 16 | 48 | | 22 |
| 696+75 | 4.5 | PL | 8 | 12 | 10.7 | | | | 10.7 | | | 10.7 | 40 | | 22 |
| 700+60 | 4.5 | PL | 6 | 12 | 8 | | | | 8 | | | 8 | 36 | | 22 |
| 710+65 | 4.3 | PL | 20 | 12 | 26.7 | | | | | | 26.7 | 26.7 | 64 | | 22 |
| 716+95 | 4.2 | PL | 10 | 12 | 13.3 | | | | 13.3 | | | 13.3 | 44 | | 22 |
| 742+80 | 3.7 | PL | 20 | 12 | 26.7 | | | 26.7 | | | | 26.7 | 64 | | 22 |
| 743+35 | 3.7 | PL | 6 | 12 | 8 | 8 | | | | | | 8 | 36 | | 22 |
| 751+80 | 3.5 | PL | 6 | 12 | 8 | 8 | | | | | | 8 | 36 | | 22 |
| 752+85 | 3.5 | PL | 6 | 12 | 8 | 8 | | | | | | 8 | 36 | | 22 |
| 799+30 | 2.6 | PL | 12 | 12 | 16 | | 16 | | | | | 16 | 48 | | 22 |
| 874+80 | 1.2 | PL | 40 | 12 | 53.3 | | | 53.3 | | | | 53.3 | 104 | 13 | 22 |
| 898+60 | 0.7 | PL | 40 | 12 | 53.3 | | | 53.3 | | | | 53.3 | 104 | 13 | 22 |
| 899+60 | 0.7 | PL | 15 | 12 | 20 | | 20 | | | | | 20 | 54 | | 22 |
| PASSING LANE TOTAL | | | | | 486.7 | 48 | 36 | 133.3 | 80 | 16 | 173.4 | 486.7 | 1282 | 63 | 506 |
| DRIVING LANE | | | | | | | | | | | | | | | |
| 583+50 | 6.7 | DL | 6 | 12 | 8 | | | | 8 | | | 8 | 36 | | 22 |
| 596+55 | 6.4 | DL | 6 | 12 | 8 | 8 | | | | | | 8 | 36 | | 22 |
| 606+95 | 6.2 | DL | 6 | 12 | 8 | 8 | | | | | | 8 | 36 | | 22 |
| 608+70 | 6.2 | DL | 6 | 12 | 8 | 8 | | | | | | 8 | 36 | | 22 |
| 625+60 | 5.9 | DL | 6 | 12 | 8 | | | | 8 | | | 8 | 36 | | 22 |
| 651+35 | 5.4 | DL | 6 | 12 | 8 | | | | 8 | | | 8 | 36 | | 22 |
| 696+75 | 4.5 | DL | 8 | 12 | 10.7 | | | | 10.7 | | | 10.7 | 40 | | 22 |
| 699+00 | 4.5 | DL | 30 | 12 | 40 | | | | | | 40 | 40 | 84 | 10 | 22 |
| 700+60 | 4.5 | DL | 6 | 12 | 8 | | | | 8 | | | 8 | 36 | | 22 |
| 710+65 | 4.3 | DL | 80 | 12 | 106.7 | | | | | | 106.7 | 106.7 | 184 | 27 | 22 |
| 716+95 | 4.2 | DL | 10 | 12 | 13.3 | | | | 13.3 | | | 13.3 | 44 | | 22 |
| 743+35 | 3.7 | DL | 6 | 12 | 8 | 8 | | | | | | 8 | 36 | | 22 |
| 751+80 | 3.5 | DL | 6 | 13 | 8.7 | 8.7 | | | | | | 8.7 | 38 | | 24 |
| 732+85 | 3.5 | DL | 6 | 14 | 9.3 | 9.3 | | | | | | 9.3 | 40 | | 26 |
| 786+65 | 2.8 | DL | 6 | 15 | 10 | 10 | | | | | | 10 | 42 | | 28 |
| DRIVING LANE TOTAL | | | | | 262.7 | 60 | 0 | 0 | 56 | 0 | 146.7 | 262.7 | 760 | 37 | 342 |
| NORTHBOUND SUBTOTAL | | | | | 749 | 108 | 36 | 133 | 136 | 16 | 320 | 749 | 2042 | 100 | 848 |
| GRAND TOTAL | | | | | 1223 | 295 | 56 | 267 | 253 | 32 | 320 | 1223 | 3592 | 113 | 1618 |

MODEL: Default
FILE NAME: c:\pw_work\pwidot\ferguson\jhud874886\D366H62-schedules.dgn

| | | |
|---|---|---|
| USER NAME = Brandon.Dyer | DESIGNED - | REVISED - |
| | DRAWN - | REVISED - |
| PLOT SCALE = 100.000 ' / in. | CHECKED - | REVISED - |
| PLOT DATE = 12/15/2023 | DATE - | REVISED - |

**STATE OF ILLINOIS**
**DEPARTMENT OF TRANSPORTATION**

**SCHEDULES**

SCALE: | SHEET 1 OF 24 SHEETS | STA. TO STA.

| F.A.I. RTE. | SECTION | COUNTY | TOTAL SHEETS | SHEET NO. |
|---|---|---|---|---|
| 57 | (38-6,38-5)RS,BRR,CLV | IROQUOIS | 213 | 42 |

CONTRACT NO. 66H62

ILLINOIS | FED. AID PROJECT

# TEMPORARY CONCRETE BARRIER SCHEDULE

| LOCATION | LENGTH | SIDE | TEMPORARY CONCRETE BARRIER | | BARRIER WALL REFLECTOR | | IMPACT ATTENUATOR NON-REDIRECTIVE TL 3 | |
|---|---|---|---|---|---|---|---|---|
| | | | INSTALL | RELOCATE | TYPE C | | INSTALL | RELOCATE |
| STA - STA | FOOT | | FOOT | FOOT | CRYSTAL | AMBER | EACH | EACH |
| STAGE 1 - PASSING LANE CLOSURE | | | | | | | | |
| | | | | | | | | |
| | | | | | | | | |
| STAGE 2 - DRIVING LANE CLOSURE | | | | | | | | |
| | | | | | | | | |
| 534+00.00 - 551+31.00 | 1,731.0 | SB | 1,737.5 | | 70.0 | | 1 | |
| 642+00.00 - 651+25.00 | 925.0 | SB | 925.0 | | 37.0 | | 1 | |
| | | | | | | | | |
| 535+69.00 - 553+00.00 | 1,731.0 | NB | 1,737.5 | | 70.0 | | 1 | |
| 643+75.00 653+00.00 | 925.0 | NB | 925.0 | | 37.0 | | 1 | |
| | | | | | | | | |
| STAGE 3 - PASSING LANE CLOSURE | | | | | | | | |
| | | | | | | | | |
| 534+00.00 - 551+31.00 | 1,731.0 | SB | | 1,737.5 | | 70.0 | | 1 |
| 642+00.00 - 651+25.00 | 925.0 | SB | | 925.0 | | 37.0 | | 1 |
| | | | | | | | | |
| 535+69.00 - 553+00.00 | 1,731.0 | NB | | 1,737.5 | | 70.0 | | 1 |
| 643+75.00 653+00.00 | 925.0 | NB | | 925.0 | | 37.0 | | 1 |
| | | | | | | | | |
| STAGE 4 - DRIVING LANE CLOSURE | | | | | | | | |
| | | | | | | | | |
| | | | | | | | | |
| TOTALS | | | 5,325 | 5,325 | 428 | | 4 | 4 |

MODEL: Default
FILE NAME: c:\pw_work\pwidot\ferguson\jhud0874886\D366H62-schedules.dgn

| | | | |
|---|---|---|---|
| USER NAME = Brandon.Dyer | DESIGNED - | REVISED - | |
| | DRAWN - | REVISED - | |
| PLOT SCALE = 100.000 ' / in. | CHECKED - | REVISED - | |
| PLOT DATE = 12/15/2023 | DATE - | REVISED - | |

**STATE OF ILLINOIS**
**DEPARTMENT OF TRANSPORTATION**

**SCHEDULES**

SCALE: SHEET 1 OF 24 SHEETS STA. TO STA.

| F.A.I. RTE. | SECTION | COUNTY | TOTAL SHEETS | SHEET NO. |
|---|---|---|---|---|
| 57 | (38-6,38-5)RS,BRR,CLV | IROQUOIS | 213 | 43 |

CONTRACT NO. 66H62

ILLINOIS FED. AID PROJECT

# CLASS A PATCHING SCHEDULE (UNDER STRUCTURES)

| LOCATION | LANE | PATCH LENGTH | CLASS A PATCH TY IV 12" | EARTH EX (2) | AGG SUBGRADE IMPR 12" | PATCH REINF | SAW CUTS | TIE BARS 3/4" | TIE BARS 1" |
|---|---|---|---|---|---|---|---|---|---|
| | PL/DL | FOOT | SQ YD | CU YD | SQ YD | SQ YD | FOOT | EACH | EACH |
| SOUTHBOUND | | | | | | | | | |
| STRUCTURE 038-0086 (OVERHEAD) | | | | | | | | | |
| 536+00 TO 551+00 | PL | 1500 | 2000 | 125 | 2000 | 2000 | 3024 | 500 | 22 |
| 536+00 TO 551+00 | DL | 1500 | 2000 | 125 | 2000 | 2000 | 1524 | 500 | 22 |
| | | | | | | | | | |
| STRUCTURE 038-0031 (OVERHEAD) | | | | | | | | | |
| 644+00 TO 651+00 | PL | 700 | 933 | 58.3 | 933 | 933 | 1424 | 233 | 22 |
| 644+00 TO 651+00 | DL | 700 | 933 | 58.3 | 933 | 933 | 724 | 233 | 22 |
| | | | | | | | | | |
| NORTHBOUND | | | | | | | | | |
| STRUCTURE 038-0086 (OVERHEAD) | | | | | | | | | |
| 536+00 TO 551+00 | PL | 1500 | 2000 | 125 | 2000 | 2000 | 3024 | 500 | 22 |
| 536+00 TO 551+00 | DL | 1500 | 2000 | 125 | 2000 | 2000 | 1524 | 500 | 22 |
| | | | | | | | | | |
| STRUCTURE 038-0031 (OVERHEAD) | | | | | | | | | |
| 644+00 TO 651+00 | PL | 700 | 933 | 58.3 | 933 | 933 | 1424 | 233 | 22 |
| 644+00 TO 651+00 | DL | 700 | 933 | 58.3 | 933 | 933 | 724 | 233 | 22 |
| | | | | | | | | | |
| TOTAL | | 8,800 | 11,732 | 733 | 11,732 | 11,732 | 13,392 | 2,932 | 176 |

NOTE: FINISH GRADE OF PATCHES SHALL ADHERE TO VERTICAL CLEARANCE REQUIREMENTS (SEE DETAIL)

# PAVEMENT MARKING SCHEDULE (1/2)

NORTHBOUND LANES

| LOCATION | | LENGTH | EPOXY PAVT MKG 4 INCH | | PREFORMED PLASTIC PAVT MARKING, TYPE D 8 INCH | | 12 INCH | GROOVING FOR RECESSED PAVEMENT MARKING | | | SHLD RUMBLE STRIPS 16" | RAISED REFLECTIVE PAVEMENT MARKERS | RAISED REFL PAVT MARKER REMOVAL |
|---|---|---|---|---|---|---|---|---|---|---|---|---|---|
| | | | WHITE | YELLOW | WHITE | CONTRAST* | WHITE | 5 INCH | 9 INCH | 13 INCH | | | |
| STATION TO STATION | DESCRIPTION | FOOT | FOOT | FOOT | FOOT | FOOT | FOOT | FOOT | FOOT | FOOT | FOOT | EACH | EACH |
| 520+00 TO 522+81 BK | MAINLINE | 280.70 | 562 | 562 | | 71 | | 1124 | 71 | | 281 | 3 | 3 |
| 522+83 AH TO 536+00 | MAINLINE | 1317.06 | 2636 | 2636 | | 330 | | 5272 | 330 | | 1318 | 16 | 15 |
| 536+00 TO 551+00 | SN 038-0086 | 1500 | | | | 375 | | | 375 | | | 19 | |
| 551+00 TO 551+55 BK | MAINLINE | 54.76 | 110 | 110 | | 14 | | 220 | 14 | | 55 | 1 | 1 |
| 551+51 AH TO 584+59 | MAINLINE | 3308.09 | 6618 | 6618 | | 828 | | 13236 | 828 | | 3309 | 41 | |
| 584+59 TO 585+66 | SN 038-0007 | 106.67 | | | | 27 | | | 27 | | | 2 | |
| 585+66 TO 591+76 | MAINLINE | 610.15 | 1222 | 1222 | | 153 | | 2444 | 153 | | 611 | 7 | |
| 591+76 TO 593+50 | SN 038-0005 | 174 | | | | 44 | | | 44 | | | 2 | 2 |
| 593+50 TO 603+04 | MAINLINE | 954.1 | 1910 | 1910 | | 239 | | 3820 | 239 | | 955 | 12 | |
| 603+04 TO 605+31 | SN 038-0003 | 226.58 | | | | 57 | | | 57 | | | 3 | 3 |
| 605+31 TO 612+80 | MAINLINE | 749.42 | 1500 | 1500 | | 188 | | 3000 | 188 | | 750 | 10 | |
| 612+80 TO 617+98 BK | MAINLINE | 518.03 | 1038 | 1038 | | 130 | | 2076 | 130 | | 519 | 6 | 6 |
| 618+00 AH TO 625+99 | MAINLINE | 798.7 | 1598 | 1598 | | 200 | | 3196 | 200 | | 799 | 10 | |
| 625+99 TO 633+49 | ENTRANCE RAMP | 750.08 | 1502 | 1502 | | 188 | | 3004 | 188 | | | 9 | 9 |
| 633+49 TO 635+80 | RAMP GORE | 231.13 | | 464 | 232 | 58 | | 464 | 290 | | | 3 | 3 |
| 635+80 TO 637+00 | GORE EXTENDS | 120.09 | | 242 | 121 | 31 | | 242 | 152 | | 121 | 2 | 2 |
| 637+00 TO 644+00 | MAINLINE | 700 | 1400 | 1400 | | 175 | | 2800 | 175 | | 700 | 8 | 8 |
| 644+00 TO 651+00 | MAINLINE | 700 | 1400 | 1400 | | 175 | | 2800 | 175 | | 700 | 9 | 9 |
| 651+00 TO 657+28 | MAINLINE | 628 | 1256 | 1256 | | 157 | | 2512 | 157 | | 628 | 8 | 8 |
| 657+28 TO 657+81 | GORE EXTENDS | 53.13 | | 108 | 54 | 14 | | 108 | 68 | | 54 | 1 | |
| 657+81 TO 661+47 | RAMP GORE | 365.76 | | 732 | 366 | 92 | 185 | 732 | 458 | 185 | | 4 | 4 |
| 661+47 TO 664+31 | EXIT RAMP | 284.18 | 570 | 570 | | 72 | | 1140 | 72 | | | 4 | 4 |
| 664+31 TO 669+13 BK | MAINLINE | 481.55 | 964 | 964 | | 121 | | 1928 | 121 | | 482 | 6 | 6 |
| 669+13 AH TO 697+47 | MAINLINE | 2833.74 | 5668 | 5668 | | 709 | | 11336 | 709 | | 2834 | 35 | 32 |
| 697+47 TO 698+38 | SN 038-0002 | 91.64 | | | | 23 | | | 23 | | | 1 | 1 |
| 698+38 TO 706+65 | MAINLINE | 826.63 | 1654 | 1654 | | 207 | | 3308 | 207 | | 827 | 11 | |
| 706+65 TO 710+15 | SN 038-0129 | 350 | | | | 88 | | | 88 | | | 4 | 4 |
| 710+15 TO 740+50 | MAINLINE | 3035 | 6070 | 6070 | | 759 | | 12140 | 759 | | 3035 | 38 | |
| 740+50 TO 767+10 BK | MAINLINE | 2659.95 | 5320 | 5320 | | 665 | | 10640 | 665 | | 2660 | 33 | 30 |
| 767+09 AH TO 777+86 | MAINLINE | 1077.06 | 2156 | 2156 | | 270 | | 4312 | 270 | | 1078 | 14 | 13 |
| 777+86 TO 785+46 | ENTRANCE RAMP | 759.97 | 1520 | 1520 | | 190 | | 3040 | 190 | | | 9 | 9 |
| 785+46 TO 787+47 | RAMP GORE | 200.56 | | 402 | 201 | 51 | | 402 | 252 | | | 3 | 3 |
| 787+47 TO 789+35 | GORE EXTENDS | 188.08 | | 378 | 189 | 48 | | 378 | 237 | | 189 | 2 | 2 |
| 789+35 TO 798+24 | MAINLINE | 889 | 1778 | 1778 | | 223 | | 3556 | 223 | | 889 | 11 | 10 |
| 798+24 TO 799+64 | SN 038-0048 TAPER | 140 | 280 | 280 | | 35 | | 560 | 35 | | 140 | 2 | 2 |
| 799+64 TO 801+55 | SN 038-0048 OMISSION | 191 | | | | 48 | | | 48 | | | 2 | 2 |
| 801+55 TO 802+95 | SN 038-0048 TAPER | 140 | 280 | 280 | | 35 | | 560 | 35 | | 140 | 2 | |
| 802+95 TO 810+36 | MAINLINE | 741 | 1482 | 1482 | | 186 | | 2964 | 186 | | 741 | 9 | 9 |
| 810+36 TO 811+16 | GORE EXTENDS | 80.3 | | 162 | 81 | 21 | | 162 | 102 | | 81 | 1 | 1 |
| 811+16 TO 814+82 | RAMP GORE | 365.79 | | 732 | 366 | 92 | 186 | 732 | 458 | 186 | | 5 | 5 |
| 814+82 TO 817+66 | EXIT RAMP | 284.15 | 570 | 570 | | 72 | | 1140 | 72 | | | 4 | 4 |
| 817+66 TO 827+13 BK | MAINLINE | 946.37 | 1894 | 1894 | | 237 | | 3788 | 237 | | 947 | 11 | 10 |
| 827+12 AH TO 910+80 | MAINLINE | 8367.92 | 16736 | 16736 | | 2092 | | 33472 | 2092 | | 8368 | 105 | 95 |
| NORTHBOUND SUBTOTAL | | 39080.34 | 69694 | 72914 | 1610 | 9790 | 371 | 142608 | 11400 | 371 | 33211 | 488 | 315 |

*CONTRAST PAVEMENT MARKINGS SHALL BE 1.5" BLACK BORDER AND 5" WHITE, GROOVED (SEE DETAIL)

MODEL: Default
FILE NAME: c:\pw_work\pwidot\ferguson\hd0874886\D366H62-schedules.dgn

| | | | |
|---|---|---|---|
| USER NAME = Brandon.Dyer | DESIGNED - | REVISED - | STATE OF ILLINOIS DEPARTMENT OF TRANSPORTATION |
| | DRAWN - | REVISED - | |
| PLOT SCALE = 100.000 ' / in. | CHECKED - | REVISED - | |
| PLOT DATE = 12/15/2023 | DATE - | REVISED - | |

**SCHEDULES**

SCALE: | SHEET 1 OF 24 SHEETS | STA. | TO STA.

| F.A.I. RTE. | SECTION | COUNTY | TOTAL SHEETS | SHEET NO. |
|---|---|---|---|---|
| 57 | (38-6,38-5)RS,BRR,CLV | IROQUOIS | 213 | 45 |

CONTRACT NO. 66H62

ILLINOIS | FED. AID PROJECT

# PAVEMENT MARKING SCHEDULE (2/2)

SOUTHBOUND LANES

| LOCATION | | LENGTH | EPOXY PAVT MKG | | | | | GROOVING FOR RECESSED PAVEMENT MARKING | | | SHLD RUMBLE STRIPS | RAISED REFLECTIVE PAVEMENT MARKERS | RAISED REFL PAVT MARKER REMOVAL |
|---|---|---|---|---|---|---|---|---|---|---|---|---|---|
| | | | 4 INCH | | 8 INCH | | 12 INCH | | | | 16" | | |
| | | | WHITE | YELLOW | WHITE | CONTRAST* | WHITE | 5 INCH | 9 INCH | 13 INCH | | | |
| STATION TO STATION | DESCRIPTION | FOOT | FOOT | FOOT | FOOT | FOOT | FOOT | FOOT | FOOT | FOOT | FOOT | EACH | EACH |
| 520+00 TO 522+81 BK | MAINLINE | 280.7 | 562 | 562 | | 71 | | 1124 | 71 | | 281 | 3 | 3 |
| 522+83 AH TO 536+00 | MAINLINE | 1317.06 | 2636 | 2636 | | 330 | | 5272 | 330 | | 1318 | 16 | 15 |
| 536+00 TO 551+00 | SN 038-0086 | 1500 | | | | 375 | | | 375 | | | | |
| 551+00 TO 551+55 BK | MAINLINE | 54.76 | 110 | 110 | | 14 | | 220 | 14 | | 55 | 1 | 1 |
| 551+51 AH TO 584+57 | MAINLINE | 3306.27 | 6614 | 6614 | | 827 | | 13228 | 827 | | 3307 | 41 | 37 |
| 584+57 TO 585+64 | SN 038-0008 | 106.67 | | | | 27 | | | 27 | | | | |
| 585+64 TO 591+77 | MAINLINE | 613.48 | 1228 | 1228 | | 154 | | 2456 | 154 | | 614 | 8 | 8 |
| 591+77 TO 593+51 | SN 038-0006 | 174 | | | | 44 | | | 44 | | | | |
| 593+51 TO 603+93 | MAINLINE | 1041.69 | 2084 | 2084 | | 261 | | 4168 | 261 | | 1042 | 13 | 12 |
| 603+93 TO 606+20 | SN 038-0004 | 226.58 | | | | 57 | | | 57 | | | | |
| 606+20 TO 612+80 | MAINLINE | 660.32 | 1322 | 1322 | | 166 | | 2644 | 166 | | 661 | 8 | 8 |
| 612+80 TO 617+98 BK | MAINLINE | 518.03 | 1038 | 1038 | | 130 | | 2076 | 130 | | 519 | 7 | 7 |
| 618+00 AH TO 630+40 | MAINLINE | 1239.61 | 2480 | 2480 | | 310 | | 4960 | 310 | | 1240 | 15 | 14 |
| 630+40 TO 633+25 | EXIT RAMP | 284.94 | 570 | 570 | | 72 | | 1140 | 72 | | | 4 | 4 |
| 633+25 TO 636+83 | RAMP GORE | 358.01 | | 718 | 359 | 90 | 186 | 718 | 449 | 186 | | 13 | 12 |
| 636+83 TO 637+36 | GORE EXTENDS | 53.44 | | 108 | 54 | 14 | | 108 | 68 | | 54 | 4 | 4 |
| 637+36 TO 644+00 | MAINLINE | 664 | 1328 | 1328 | | 166 | | 2656 | 166 | | 664 | | |
| 644+00 TO 651+00 | SN 038-0031 | 700 | | | | 175 | | | 175 | | | 14 | 13 |
| 651+00 TO 657+42 | MAINLINE | 642 | 1284 | 1284 | | 161 | | 2568 | 161 | | 642 | 24 | 22 |
| 657+42 TO 658+82 | GORE EXTENDS | 139.84 | | 280 | 140 | 35 | | 280 | 175 | | 140 | 2 | 2 |
| 658+82 TO 661+09 | RAMP GORE | 227.26 | | 456 | 228 | 57 | | 456 | 285 | | | 2 | 2 |
| 661+09 TO 668+54 | ENTRANCE RAMP | 745.23 | 1492 | 1492 | | 187 | | 2984 | 187 | | | 10 | 9 |
| 668+54 TO 669+13 BK | MAINLINE | 58.29 | 118 | 118 | | 15 | | 236 | 15 | | 59 | | |
| 669+13 AH TO 697+13 | MAINLINE | 2799.87 | 5600 | 5600 | | 700 | | 11200 | 700 | | 2800 | 35 | 32 |
| 697+13 TO 698+03 | SN 038-0001 | 90.04 | | | | 23 | | | 23 | | | | |
| 698+03 TO 705+60 | MAINLINE | 757.1 | 1516 | 1516 | | 190 | | 3032 | 190 | | 758 | 9 | 9 |
| 705+60 TO 709+10 | SN 038-0129 | 350 | | | | 88 | | | 88 | | | 5 | 5 |
| 709+10 TO 740+50 | MAINLINE | 3140 | 6280 | 6280 | | 785 | | 12560 | 785 | | 3140 | 39 | 36 |
| 740+50 TO 767+10 BK | MAINLINE | 2659.95 | 5320 | 5320 | | 665 | | 10640 | 665 | | 2660 | 33 | 30 |
| 767+09 AH TO 784+42 | MAINLINE | 1732.24 | 3466 | 3466 | | 434 | | 6932 | 434 | | 1733 | 22 | 20 |
| 784+42 TO 787+15 | EXIT RAMP | 273.22 | 548 | 548 | | 69 | | 1096 | 69 | | | 10 | 9 |
| 787+15 TO 790+72 | RAMP GORE | 357.43 | | 716 | 358 | 90 | 175 | 716 | 448 | 175 | | 17 | 16 |
| 790+72 TO 791+50 | GORE EXTENDS | 77.78 | | 156 | 78 | 20 | | 156 | 98 | | 78 | 1 | 1 |
| 791+50 TO 798+24 | MAINLINE | 674 | 1348 | 1348 | | 169 | | 2696 | 169 | | 674 | 8 | 8 |
| 798+24 TO 799+64 | SN 038-0048 TAPER | 140 | | | | 35 | | | 35 | | | | |
| 799+64 TO 801+55 | SN 038-0048 | 191 | | | | 48 | | | 48 | | | 2 | 2 |
| 801+55 TO 802+95 | SN 038-0048 TAPER | 140 | | | | 35 | | | 35 | | | 4 | 4 |
| 802+95 TO 810+73 | MAINLINE | 778 | 1556 | 1556 | | 195 | | 3112 | 195 | | 778 | 30 | 27 |
| 810+73 TO 811+62 | GORE EXTENDS | 88.91 | | 178 | 89 | 23 | | 178 | 112 | | 89 | 1 | 1 |
| 811+62 TO 815+20 | RAMP GORE | 357.93 | | 716 | 358 | 90 | | 716 | 448 | | | 5 | 5 |
| 815+20 TO 822+70 | ENTRANCE RAMP | 749.9 | 1500 | 1500 | | 188 | | 3000 | 188 | | | 9 | 9 |
| 822+70 TO 827+13 BK | MAINLINE | 442.87 | 886 | 886 | | 111 | | 1772 | 111 | | 443 | 5 | 5 |
| 827+12 AH TO 910+80 | MAINLINE | 8367.92 | 16736 | 16736 | | 2092 | | 33472 | 2092 | | 8368 | 105 | 95 |
| SOUTHBOUND SUBTOTAL | | 39080.34 | 67622 | 70950 | 1664 | 9788 | 361 | 138572 | 11452 | 361 | 32117 | 525 | 487 |
| TOTAL | | 78150.68 | 281180 | | 22852 | | 732 | 281180 | 22852 | 732 | 65328 | 1013 | 802 |

*CONTRAST PAVEMENT MARKINGS SHALL BE 1.5" BLACK BORDER AND 5" WHITE, GROOVED (SEE DETAIL)

# RAMP PAVEMENT MARKING SCHEDULE (1/2)

US24 INTERCHANGE

| LOCATION | | | LENGTH | THERMOPLASTIC PAVT MARKING | | PREF PL PM TD | | | | GROOVING FOR RECESSED PAVEMENT MARKING | | | |
|---|---|---|---|---|---|---|---|---|---|---|---|---|---|
| | | | | WHITE | | WHITE | YELLOW | WHITE | | | | | |
| | | | | 12" | 24" | 4" | 4" | 8" | L&S | L&S | 5 INCH | 9 INCH | 25 INCH |
| STA | TO STA | DESCRIPTION | FOOT | FOOT | FOOT | FOOT | FOOT | FOOT | SQ FT | SQ FT | FOOT | FOOT | FOOT |
| | | RAMP A | | | | | | | | | | | |
| +0 | TO 1+46 | TOP OF RAMP TO BUTT JOINT | 146.00 | 0 | 0 | 150 | 130 | 0 | | | 280 | | |
| 1+46 | TO 1+59 | BUTT JOINT TO TOP OF 2ND CURVE | 13.36 | | | 14 | 14 | | | | 28 | | |
| 1+59 | TO 5+26 | TOP OF 2ND CURVE TO BOTTOM OF 2ND CURVE | 367.01 | | | 368 | 368 | | | | 736 | | |
| 5+26 | TO 7+90 | BOTTOM OF 2ND CURVE TO TOP OF 1ST CURVE | 263.36 | | | 264 | 264 | | | | 528 | | |
| 7+90 | TO 12+20 | TOP OF 1ST CURVE TO GORE END | 430.27 | | | 431 | 431 | | | | 862 | | |
| 12+20 | TO 12+64 | GORE END TO SURFACE TAPER (MAINLINE) | 44.00 | | | 44 | | 44 | | | 44 | 44 | |
| 12+64 | TO 13+38 | SURFACE TAPER (MAINLINE) TO SURFACE TAPER (RAMP) | 74.00 | | | 74 | | 74 | | | 74 | 74 | |
| 13+38 | TO 15+96 | SURFACE TAPER (RAMP) TO GORE POINT | 258.00 | | | | | 258 | | | | 258 | |
| 15+96 | TO 23+18 | GORE POINT TO BOTTOM OF RAMP | 722.40 | | | | | 181 | | | | 181 | |
| | | RAMP B | | | | | | | | | | | |
| +0 | TO 3+00 | BOTTOM OF RAMP TO GORE POINT | 300.00 | | | | | 75 | | | | 75 | |
| 3+00 | TO 6+50 | GORE POINT TO SURFACE TAPER (MAINLINE) | 350.00 | | | | | 350 | | | | 350 | |
| 6+50 | TO 7+20 | SURFACE TAPER (MAINLINE) TO SURFACE TAPER (RAMP) | 70.00 | | | 70 | | 70 | | | 70 | 70 | |
| 7+20 | TO 11+94 | SURFACE TAPER (RAMP) TO TOP OF 1ST CURVE | 474.29 | | | 475 | 475 | | | | 950 | | |
| 11+94 | TO 14+57 | TOP OF 1ST CURVE TO BOTTOM OF 2ND CURVE | 263.03 | | | 264 | 264 | | | | 528 | | |
| 14+57 | TO 16+85 | BOTTOM OF 2ND CURVE TO TOP OF 2ND CURVE | 227.83 | | | 228 | 228 | | | | 456 | | |
| 16+85 | TO 17+60 | TOP OF 2ND CURVE TO BUTT JOINT | 74.85 | | | 75 | 75 | | 24.3 | 24.3 | 150 | | |
| 17+60 | TO 19+18 | BUTT JOINT TO TOP OF RAMP | 158.17 | 51 | 56 | 227 | 135 | 146 | 31.2 | 31.2 | 362 | 146 | 56 |
| | TO | RAMP C | | | | | | | | | | | |
| +0 | 3+00 | BOTTOM OF RAMP TO GORE POINT | 300.00 | | | | | 75 | | | | 75 | |
| 3+00 | TO 6+43 | GORE POINT TO SURFACE TAPER (MAINLINE) | 343.00 | | | | | 343.00 | | | | 343 | |
| 6+43 | TO 7+13 | SURFACE TAPER (MAINLINE) TO SURFACE TAPER (RAMP) | 70.00 | | | 70 | | 70 | | | 70 | 70 | |
| 7+13 | TO 11+96 | SURFACE TAPER (RAMP) TO TOP OF 1ST CURVE | 482.73 | | | 483 | 483 | | | | 966 | | |
| 11+96 | TO 14+60 | TOP OF 1ST CURVE TO BOTTOM OF 2ND CURVE | 263.81 | | | 264 | 264 | | | | 528 | | |
| 14+60 | TO 16+91 | BOTTOM OF 2ND CURVE TO TOP OF 2ND CURVE | 231.84 | | | 232 | 232 | | | | 464 | | |
| 16+91 | TO 17+67 | TOP OF 2ND CURVE TO BUTT JOINT | 75.62 | | | 76 | 76 | | 24.3 | 24.3 | 152 | | |
| 17+67 | TO 19+18 | BUTT JOINT TO TOP OF RAMP | 151.29 | 60 | 56 | 215 | 106 | 144 | 31.2 | 31.2 | 321 | 144 | 56 |
| | TO | RAMP D | | | | | | | | | | | |
| +0 | TO 1+47 | TOP OF RAMP TO BUTT JOINT | 147.00 | 0 | 0 | 167 | 132 | 0 | | | 299 | | |
| 1+47 | 1+60 | BUTT JOINT TO TOP OF 2ND CURVE | 12.76 | | | 13 | 13 | | | | 26 | | |
| 1+60 | TO 5+24 | TOP OF 2ND CURVE TO BOTTOM OF 2ND CURVE | 363.75 | | | 364 | 364 | | | | 728 | | |
| 5+24 | TO 7+87 | BOTTOM OF 2ND CURVE TO TOP OF 1ST CURVE | 263.37 | | | 264 | 264 | | | | 528 | | |
| 7+87 | TO 11+96 | TOP OF 1ST CURVE TO GORE END | 409.12 | | | 410 | 410 | | | | 820 | | |
| 11+96 | TO 12+56 | GORE END TO SURFACE TAPER (RAMP) | 60.00 | | | 60 | | 60 | | | 60 | 60 | |
| 12+56 | TO 13+30 | SURFACE TAPER (RAMP) TO SURFACE TAPER (MAINLINE) | 74.00 | | | 74 | | 74 | | | 74 | 74 | |
| 13+30 | TO 13+65 | SURFACE TAPER (MAINLINE) TO BOTTOM OF 1ST CURVE | 35.25 | | | | | 36 | | | | 36 | |
| 13+65 | TO 15+74 | BOTTOM OF 1ST CURVE TO GORE POINT | 208.75 | | | | | 209 | | | | 209 | |
| 15+74 | TO 23+02 | GORE POINT TO BOTTOM OF RAMP | 727.59 | | | | | 243 | | | | 243 | |
| US-24 INTERCHANGE SUBTOTAL | | | 8456 | 111 | 112 | 5376 | 4728 | 2452 | 111 | 111 | 10104 | 2452 | 112 |

MODEL: Default
FILE NAME: c:\pw_work\pwidot\ferguson\hud\d874886\D366H62-schedules.dgn

| | | |
|---|---|---|
| USER NAME = Brandon.Dyer | DESIGNED - | REVISED - |
| | DRAWN - | REVISED - |
| PLOT SCALE = 100.000 ' / in. | CHECKED - | REVISED - |
| PLOT DATE = 12/15/2023 | DATE - | REVISED - |

**STATE OF ILLINOIS**
**DEPARTMENT OF TRANSPORTATION**

**SCHEDULES**

SCALE: | SHEET 1 OF 24 SHEETS | STA. | TO STA.

| F.A.I. RTE. | SECTION | COUNTY | TOTAL SHEETS | SHEET NO. |
|---|---|---|---|---|
| 57 | (38-6,38-5)RS,BRR,CLV | IROQUOIS | 213 | 47 |

CONTRACT NO. 66H62

ILLINOIS | FED. AID PROJECT

# RAMP PAVEMENT MARKING SCHEDULE (2/2)

IL54 INTERCHANGE

| LOCATION | | | LENGTH | THERMOPLASTIC PAVT MARKING | | | | PREF PL PM TD | | GROOVING FOR RECESSED PAVEMENT MARKING | | | |
|---|---|---|---|---|---|---|---|---|---|---|---|---|---|
| | | | | WHITE | | | YELLOW | WHITE | | | | | |
| | | | | 12" | 24" | 4" | 4" | 8" | L&S | L&S | 5 INCH | 9 INCH | 25 INCH |
| STA | TO STA | DESCRIPTION | FOOT | FOOT | FOOT | FOOT | FOOT | FOOT | SQ FT | SQ FT | FOOT | FOOT | FOOT |
| | | RAMP A | | | | | | | | | | | |
| +0 | TO 1+15 | TOP OF RAMP TO BUTT JOINT | 115.00 | 0 | 0 | 134 | 98 | 0 | | | 232 | | |
| 1+15 | TO 1+59 | BUTT JOINT TO TOP OF 2ND CURVE | 44.36 | | | 45 | 45 | | | | 90 | | |
| 1+59 | TO 5+19 | TOP OF 2ND CURVE TO BOTTOM OF 2ND CURVE | 359.33 | | | 360 | 360 | | | | 720 | | |
| 5+19 | TO 7+82 | BOTTOM OF 2ND CURVE TO TOP OF 1ST CURVE | 263.00 | | | 263 | 263 | | | | 526 | | |
| 7+82 | TO 12+93 | TOP OF 1ST CURVE TO GORE END | 511.31 | | | 512 | 512 | | | | 1024 | | |
| 12+93 | TO 13+95 | GORE END TO SURFACE TAPER (RAMP) | 102.00 | | | 102 | | 102 | | | 102 | 102 | |
| 13+95 | TO 14+69 | SURFACE TAPER (RAMP) TO SURFACE TAPER (MAINLINE) | 74.00 | | | 74 | | 74 | | | 74 | 74 | |
| 14+69 | TO 16+70 | SURFACE TAPER (MAINLINE) TO GORE POINT | 201.00 | | | | | 201 | | | | 201 | |
| 16+70 | TO 24+13 | GORE POINT TO BOTTOM OF RAMP | 742.68 | | | | | 248 | | | | 248 | |
| | | RAMP B | | | | | | | | | | | |
| +0 | TO 2+88 | BOTTOM OF RAMP TO GORE POINT | 288.00 | | | | | 72 | | | | 72 | |
| 2+88 | TO 5+30 | GORE POINT TO SURFACE TAPER (MAINLINE) | 242.00 | | | | | 242 | | | | 242 | |
| 5+30 | TO 6+00 | SURFACE TAPER (MAINLINE) TO SURFACE TAPER (RAMP) | 70.00 | | | 70 | | 70 | | | 70 | 70 | |
| 6+00 | TO 6+62 | SURFACE TAPER (RAMP) TO BOTTOM OF 1ST CURVE | 62.40 | | | 63 | | 63 | | | 63 | 63 | |
| 6+62 | TO 7+24 | BOTTOM OF 1ST CURVE TO GORE END | 61.60 | | | 62 | | 62 | | | 62 | 62 | |
| 7+24 | TO 11+92 | GORE END TO TOP OF 1ST CURVE | 467.66 | | | 468 | 468 | | | | 936 | | |
| 11+92 | TO 14+55 | TOP OF 1ST CURVE TO BOTTOM OF 2ND CURVE | 263.00 | | | 263 | 263 | | | | 526 | | |
| 14+55 | TO 16+55 | BOTTOM OF 2ND CURVE TO TOP OF 2ND CURVE | 200.64 | | | 201 | 201 | | | | 402 | | |
| 16+55 | TO 17+55 | TOP OF 2ND CURVE TO BUTT JOINT | 99.70 | | | 100 | 100 | | 24.3 | 24.3 | 200 | | |
| 17+55 | TO 18+89 | BUTT JOINT TO TOP OF RAMP | 134.23 | 117 | 46 | 200 | 103 | 149 | 31.2 | 31.2 | 303 | 149 | 46 |
| | | RAMP C | | | | | | | | | | | |
| +0 | TO 2+72 | BOTTOM OF RAMP TO GORE POINT | 272.00 | | | | | 68 | | | | 68 | |
| 2+72 | TO 5+31 | GORE POINT TO SURFACE TAPER (MAINLINE) | 259.00 | | | | | 259 | | | | 259 | |
| 5+31 | TO 6+01 | SURFACE TAPER (MAINLINE) TO SURFACE TAPER (RAMP) | 70.00 | | | 70 | | 70 | | | 70 | 70 | |
| 6+01 | TO 6+69 | SURFACE TAPER (RAMP) TO BOTTOM OF 1ST CURVE | 67.88 | | | 68 | | 68 | | | 68 | 68 | |
| 6+69 | TO 7+18 | BOTTOM OF 1ST CURVE TO GORE END | 49.12 | | | 50 | | 50 | | | 50 | 50 | |
| 7+18 | TO 11+36 | GORE END TO TOP OF 1ST CURVE | 418.07 | | | 419 | 419 | | | | 838 | | |
| 11+36 | TO 13+98 | TOP OF 1ST CURVE TO BOTTOM OF 2ND CURVE | 261.93 | | | 262 | 262 | | | | 524 | | |
| 13+98 | TO 16+22 | BOTTOM OF 2ND CURVE TO TOP OF 2ND CURVE | 223.75 | | | 224 | 224 | | | | 448 | | |
| 16+22 | TO 17+53 | TOP OF 2ND CURVE TO BUTT JOINT | 131.25 | | | 132 | 132 | | 24.3 | 24.3 | 264 | | |
| 17+53 | TO 18+53 | BUTT JOINT TO TOP OF RAMP | 100.29 | 103 | 46 | 153 | 70 | 144 | 31.2 | 31.2 | 223 | 144 | 46 |
| | | RAMP D | | | | | | | | | | | |
| +0 | TO 1+23 | TOP OF RAMP TO BUTT JOINT | 123.00 | 0 | 0 | 142 | 105 | 0 | | | 247 | | |
| 1+23 | TO 1+60 | BUTT JOINT TO TOP OF 2ND CURVE | 36.97 | | | 37 | 37 | | | | 74 | | |
| 1+60 | TO 5+56 | TOP OF 2ND CURVE TO BOTTOM OF 2ND CURVE | 396.06 | | | 397 | 397 | | | | | | |
| 5+56 | TO 8+18 | BOTTOM OF 2ND CURVE TO TOP OF 1ST CURVE | 262.28 | | | 263 | 263 | | | | | | |
| 8+18 | TO 12+32 | TOP OF 1ST CURVE TO GORE END | 413.69 | | | 414 | | 414 | | | | | |
| 12+32 | TO 13+30 | GORE END TO SURFACE TAPER (RAMP) | 98.00 | | | 98 | | 98 | | | 98 | 98 | |
| 13+30 | TO 14+04 | SURFACE TAPER (RAMP) TO SURFACE TAPER (MAINLINE) | 74.00 | | | 74 | | 74 | | | 74 | 74 | |
| 14+04 | TO 16+61 | SURFACE TAPER (MAINLINE) TO GORE POINT | 257.00 | | | | | 257 | | | | 257 | |
| 16+61 | TO 24+36 | GORE POINT TO BOTTOM OF RAMP | 775.25 | | | | | 194 | | | | 194 | |
| IL-54 INTERCHANGE SUBTOTAL | | | 8591.45 | 220 | 92 | 5720 | 4322 | 2979 | 111 | 111 | 8308 | 2565 | 92 |
| TOTAL | | | 17047.90 | 331 | 204 | 11096 | 9050 | 5431 | 222 | 222 | 18412 | 5017 | 204 |

# TEMPORARY PAVEMENT MARKINGS (1/2)

NORTHBOUND LANES

| LOCATION | | | | LENGTH | PRESTAGE | | | STAGE 1 | | | STAGE 2 | | | STAGE 3 | | | STAGE 4 | | |
|---|---|---|---|---|---|---|---|---|---|---|---|---|---|---|---|---|---|---|---|
| | | | | | TMP PVT MK T4 TAPE 4" | | SHORT TERM PVT | TMP PVT MK T4 TAPE 4" | | SHORT TERM PVT | TMP PVT MK T4 TAPE 4" | | SHORT TERM PVT | TMP PVT MK T4 TAPE 4" | | SHORT TERM PVT | TMP PVT MK T4 TAPE 4" | | SHORT TERM PVT |
| | | | | | WHITE | YELLOW | MK REM | WHITE | YELLOW | MK REM | WHITE | YELLOW | MK REM | WHITE | YELLOW | MK REM | WHITE | YELLOW | MK REM |
| STATION | TO | STATION | | FOOT | FOOT | FOOT | SQ FT | FOOT | FOOT | SQ FT | FOOT | FOOT | SQ FT | FOOT | FOOT | SQ FT | FOOT | FOOT | SQ FT |
| 519+40 | TO | 520+00 | | 60 | - | - | - | 60 | 60 | 40 | 60 | 60 | 40 | 60 | 60 | 40 | 60 | 60 | 40 |
| 520+00 | TO | 522+81 | BK | 280.7 | 281 | - | 94 | 281 | 281 | 187 | 281 | 281 | 187 | 281 | 281 | 187 | 281 | 281 | 187 |
| 522+83 | AH TO | 551+55 | BK | 2871.82 | 2872 | - | 957 | 2872 | 2872 | 1915 | 2872 | 2872 | 1915 | 2872 | 2872 | 1915 | 2872 | 2872 | 1915 |
| 551+51 | AH TO | 617+47 | | 6596.01 | 6597 | - | 2199 | 6597 | 6597 | 4398 | 6597 | 6597 | 4398 | 6597 | 6597 | 4398 | 6597 | 6597 | 4398 |
| 617+47 | TO | 617+98 | BK | 51.03 | 52 | - | 17 | 52 | 52 | 35 | 52 | 52 | 35 | 52 | 52 | 35 | 52 | 52 | 35 |
| 618+00 | AH TO | 621+00 | | 300 | 300 | - | 100 | 300 | 300 | 200 | 300 | 300 | 200 | 300 | 300 | 200 | 300 | 300 | 200 |
| 621+00 | TO | 625+99 | | 498.7 | 499 | - | 166 | 499 | 499 | 333 | 499 | 499 | 333 | 499 | 499 | 333 | 499 | 499 | 333 |
| 625+99 | TO | 627+49 | | 150.3 | 151 | - | 50 | 151 | 151 | 101 | 151 | 151 | 101 | 151 | 151 | 101 | 151 | 151 | 101 |
| 627+49 | TO | 629+49 | | 200 | 200 | - | 67 | 200 | 200 | 133 | 200 | 200 | 133 | 200 | 200 | 133 | 200 | 200 | 133 |
| 629+49 | TO | 631+82 | | 233 | 233 | - | 78 | 233 | 233 | 155 | 699 | 233 | 311 | 233 | 233 | 155 | 699 | 233 | 311 |
| 631+82 | TO | 636+41 | | 459 | 1377 | - | 459 | 459 | 459 | 306 | 1377 | 459 | 612 | 459 | 459 | 306 | 1377 | 459 | 612 |
| 636+41 | TO | 636+98 | | 57 | 171 | - | 57 | 171 | 57 | 76 | 171 | 57 | 76 | 171 | 57 | 76 | 171 | 57 | 76 |
| 636+98 | TO | 657+80 | | 2082 | 2082 | - | 694 | 2082 | 2082 | 1388 | 2082 | 2082 | 1388 | 2082 | 2082 | 1388 | 2082 | 2082 | 1388 |
| 657+80 | TO | 659+20 | | 140 | 140 | - | 47 | 420 | 140 | 187 | 420 | 140 | 187 | 420 | 140 | 187 | 420 | 140 | 187 |
| 659+20 | TO | 662+23 | | 303 | 303 | - | 101 | 303 | 303 | 202 | 909 | 303 | 404 | 303 | 303 | 202 | 909 | 303 | 404 |
| 662+23 | TO | 662+98 | | 75 | 75 | - | 25 | 75 | 75 | 50 | 225 | 75 | 100 | 75 | 75 | 50 | 225 | 75 | 100 |
| 662+98 | TO | 664+30 | | 132 | 132 | - | 44 | 132 | 132 | 88 | 132 | 132 | 88 | 132 | 132 | 88 | 132 | 132 | 88 |
| 664+30 | TO | 665+81 | | 151 | 151 | - | 50 | 151 | 151 | 101 | 151 | 151 | 101 | 151 | 151 | 101 | 151 | 151 | 101 |
| 665+81 | TO | 667+80 | | 199 | 199 | - | 66 | 199 | 199 | 133 | 199 | 199 | 133 | 199 | 199 | 133 | 199 | 199 | 133 |
| 667+80 | TO | 669+13 | BK | 132.62 | 398 | - | 133 | 133 | 133 | 89 | 133 | 133 | 89 | 133 | 133 | 89 | 133 | 133 | 89 |
| 669+13 | AH TO | 767+10 | BK | 9796.96 | 29391 | - | 9797 | 9797 | 9797 | 6531 | 9797 | 9797 | 6531 | 9797 | 9797 | 6531 | 9797 | 9797 | 6531 |
| 767+09 | AH TO | 768+93 | | 183.67 | 552 | - | 184 | 184 | 184 | 123 | 184 | 184 | 123 | 184 | 184 | 123 | 184 | 184 | 123 |
| 768+93 | TO | 772+80 | | 387 | 1161 | - | 387 | 387 | 387 | 258 | 387 | 387 | 258 | 387 | 387 | 258 | 387 | 387 | 258 |
| 772+80 | TO | 777+86 | | 506.39 | 507 | - | 169 | 507 | 507 | 338 | 507 | 507 | 338 | 507 | 507 | 338 | 507 | 507 | 338 |
| 777+86 | TO | 779+39 | | 152.61 | 153 | - | 51 | 153 | 153 | 102 | 153 | 153 | 102 | 153 | 153 | 102 | 153 | 153 | 102 |
| 779+39 | TO | 781+42 | | 203 | 203 | - | 68 | 203 | 203 | 135 | 203 | 203 | 135 | 203 | 203 | 135 | 203 | 203 | 135 |
| 781+42 | TO | 783+77 | | 235 | 235 | - | 78 | 235 | 235 | 157 | 705 | 235 | 313 | 235 | 235 | 157 | 705 | 235 | 313 |
| 783+77 | TO | 785+70 | | 193 | 579 | - | 193 | 193 | 193 | 129 | 579 | 193 | 257 | 193 | 193 | 129 | 579 | 193 | 257 |
| 785+70 | TO | 788+51 | | 281 | 843 | - | 281 | 281 | 281 | 187 | 843 | 281 | 375 | 281 | 281 | 187 | 843 | 281 | 375 |
| 788+51 | TO | 789+32 | | 81 | 243 | - | 81 | 243 | 81 | 108 | 243 | 81 | 108 | 243 | 81 | 108 | 243 | 81 | 108 |
| 789+32 | TO | 811+04 | | 2172 | 2172 | - | 724 | 2172 | 2172 | 1448 | 2172 | 2172 | 1448 | 2172 | 2172 | 1448 | 2172 | 2172 | 1448 |
| 811+04 | TO | 812+56 | | 152 | 456 | - | 152 | 456 | 152 | 203 | 456 | 152 | 203 | 456 | 152 | 203 | 456 | 152 | 203 |
| 812+56 | TO | 815+58 | | 302 | 906 | - | 302 | 302 | 302 | 201 | 906 | 302 | 403 | 302 | 302 | 201 | 906 | 302 | 403 |
| 815+58 | TO | 816+33 | | 75 | 75 | - | 25 | 75 | 75 | 50 | 225 | 75 | 100 | 75 | 75 | 50 | 225 | 75 | 100 |
| 816+33 | TO | 817+10 | | 77 | 77 | - | 26 | 77 | 77 | 51 | 77 | 77 | 51 | 77 | 77 | 51 | 77 | 77 | 51 |
| 817+10 | TO | 817+66 | | 56 | 56 | - | 19 | 56 | 56 | 37 | 56 | 56 | 37 | 56 | 56 | 37 | 56 | 56 | 37 |
| 817+66 | TO | 819+16 | | 150 | 150 | - | 50 | 150 | 150 | 100 | 150 | 150 | 100 | 150 | 150 | 100 | 150 | 150 | 100 |
| 819+16 | TO | 827+13 | BK | 796.61 | 797 | - | 266 | 797 | 797 | 531 | 797 | 797 | 531 | 797 | 797 | 531 | 797 | 797 | 531 |
| 827+12 | AH TO | 910+80 | | 8367.92 | 8368 | - | 2789 | 8368 | 8368 | 5579 | 8368 | 8368 | 5579 | 8368 | 8368 | 5579 | 8368 | 8368 | 5579 |
| 910+80 | TO | 915+80 | | 500 | 500 | - | 167 | 500 | 500 | 333 | 500 | 500 | 333 | 500 | 500 | 333 | 500 | 500 | 333 |
| 917+80 | TO | 925+60 | | 780 | 780 | 780 | 520 | 780 | 780 | 520 | 780 | 780 | 520 | 780 | 780 | 520 | 780 | 780 | 520 |
| 925+60 | TO | 927+60 | | 200 | 200 | - | 67 | 200 | 200 | 133 | 200 | 200 | 133 | 200 | 200 | 133 | - | 200 | 67 |
| 927+60 | TO | 937+00 | | 940 | 940 | - | 313 | - | 940 | 313 | - | 940 | 313 | - | 940 | 313 | - | 940 | 313 |
| TOTALS | | | | | 65557 | 780 | 22113 | 41486 | 41566 | 27684 | 45798 | 41566 | 29122 | 41486 | 41566 | 27684 | 45598 | 41566 | 29056 |

MODEL: Default
FILE NAME: c:\pw_work\pwidot\ferguson\hd0874886\D366H62-schedules.dgn

| | | | |
|---|---|---|---|
| USER NAME = Brandon.Dyer | DESIGNED - | REVISED - | |
| | DRAWN - | REVISED - | |
| PLOT SCALE = 100.000 ' / in. | CHECKED - | REVISED - | |
| PLOT DATE = 12/15/2023 | DATE - | REVISED - | |

**STATE OF ILLINOIS**
**DEPARTMENT OF TRANSPORTATION**

**SCHEDULES**

SCALE: | SHEET 1 OF 24 SHEETS | STA. | TO STA.

| F.A.I. RTE. | SECTION | COUNTY | TOTAL SHEETS | SHEET NO. |
|---|---|---|---|---|
| 57 | (38-6,38-5)RS,BRR,CLV | IROQUOIS | 213 | 49 |

CONTRACT NO. 66H62

ILLINOIS | FED. AID PROJECT

# TEMPORARY PAVEMENT MARKINGS (2/2)

SOUTHBOUND LANES

| LOCATION | | | | LENGTH | PRESTAGE | | | STAGE 1 | | | STAGE 2 | | | STAGE 3 | | | STAGE 4 | | |
|---|---|---|---|---|---|---|---|---|---|---|---|---|---|---|---|---|---|---|---|
| | | | | | TMP PVT MK T3 TAPE 4" | | SHORT TERM PVT MK REM | TMP PVT MK T3 TAPE 4" | | SHORT TERM PVT MK REM | TMP PVT MK T3 TAPE 4" | | SHORT TERM PVT MK REM | TMP PVT MK T3 TAPE 4" | | SHORT TERM PVT MK REM | TMP PVT MK T3 TAPE 4" | | SHORT TERM PVT MK REM |
| | | | | | WHITE | YELLOW | | WHITE | YELLOW | | WHITE | YELLOW | | WHITE | YELLOW | | WHITE | YELLOW | |
| STATION | TO | STATION | | FOOT | FOOT | FOOT | SQ FT | FOOT | FOOT | SQ FT | FOOT | FOOT | SQ FT | FOOT | FOOT | SQ FT | FOOT | FOOT | SQ FT |
| 488+20 | TO | 500+20 | | 1200 | - | 1200 | 400 | - | 1200 | 400 | - | 1200 | 400 | - | 1200 | 400 | - | 1200 | 400 |
| 500+20 | TO | 508+00 | | 780 | 780 | 780 | 520 | - | 780 | 260 | 780 | 780 | 520 | - | 780 | 260 | 780 | 780 | 520 |
| 508+00 | TO | 515+00 | | 700 | 700 | - | 233 | - | 700 | 233 | 700 | 700 | 467 | - | 700 | 233 | 700 | 700 | 467 |
| 515+00 | TO | 522+81 | BK | 780.7 | 781 | - | 260 | 781 | 781 | 521 | 781 | 781 | 521 | 781 | 781 | 521 | 781 | 781 | 521 |
| 522+83 | AH TO | 551+55 | BK | 2871.82 | 2872 | - | 957 | 2872 | 2872 | 1915 | 2872 | 2872 | 1915 | 2872 | 2872 | 1915 | 2872 | 2872 | 1915 |
| 551+51 | AH TO | 617+98 | BK | 6647.04 | 6648 | - | 2216 | 6648 | 6648 | 4432 | 6648 | 6648 | 4432 | 6648 | 6648 | 4432 | 6648 | 6648 | 4432 |
| 618+00 | AH TO | 628+39 | | 1039 | 1039 | - | 346 | 1039 | 1039 | 693 | 1039 | 1039 | 693 | 1039 | 1039 | 693 | 1039 | 1039 | 693 |
| 628+39 | TO | 631+73 | | 334 | 334 | - | 111 | 334 | 334 | 223 | 334 | 334 | 223 | 334 | 334 | 223 | 334 | 334 | 223 |
| 631+73 | TO | 635+52 | | 379 | 379 | - | 126 | 379 | 379 | 253 | 1137 | 379 | 505 | 379 | 379 | 253 | 1137 | 379 | 505 |
| 635+52 | TO | 636+85 | | 133 | 399 | - | 133 | 399 | 133 | 177 | 399 | 133 | 177 | 399 | 133 | 177 | 399 | 133 | 177 |
| 636+85 | TO | 657+05 | | 2020 | 2020 | - | 673 | 2020 | 2020 | 1347 | 2020 | 2020 | 1347 | 2020 | 2020 | 1347 | 2020 | 2020 | 1347 |
| 657+05 | TO | 657+52 | | 47 | 47 | - | 16 | 47 | 47 | 31 | 47 | 47 | 31 | 47 | 47 | 31 | 47 | 47 | 31 |
| 657+52 | TO | 658+52 | | 100 | 100 | - | 33 | 300 | 100 | 133 | 300 | 100 | 133 | 300 | 100 | 133 | 300 | 100 | 133 |
| 658+52 | TO | 663+08 | | 456 | 456 | - | 152 | 456 | 456 | 304 | 1368 | 456 | 608 | 456 | 456 | 304 | 1368 | 456 | 608 |
| 663+08 | TO | 665+07 | | 199 | 199 | - | 66 | 199 | 199 | 133 | 597 | 199 | 265 | 199 | 199 | 133 | 597 | 199 | 265 |
| 665+07 | TO | 667+05 | | 198 | 198 | - | 66 | 198 | 198 | 132 | 198 | 198 | 132 | 198 | 198 | 132 | 198 | 198 | 132 |
| 667+05 | TO | 667+50 | | 45 | 45 | - | 15 | 45 | 45 | 30 | 45 | 45 | 30 | 45 | 45 | 30 | 45 | 45 | 30 |
| 667+50 | TO | 668+54 | | 104.334 | 314 | - | 105 | 105 | 105 | 70 | 105 | 105 | 70 | 105 | 105 | 70 | 105 | 105 | 70 |
| 668+54 | TO | 669+13 | BK | 58.286 | 59 | - | 20 | 59 | 59 | 39 | 59 | 59 | 39 | 59 | 59 | 39 | 59 | 59 | 39 |
| 669+13 | AH TO | 672+40 | | 327.01 | 328 | - | 109 | 328 | 328 | 219 | 328 | 328 | 219 | 328 | 328 | 219 | 328 | 328 | 219 |
| 672+40 | TO | 673+59 | | 119 | 119 | - | 40 | 119 | 119 | 79 | 119 | 119 | 79 | 119 | 119 | 79 | 119 | 119 | 79 |
| 673+59 | TO | 767+10 | BK | 9350.95 | 9351 | - | 3117 | 9351 | 9351 | 6234 | 9351 | 9351 | 6234 | 9351 | 9351 | 6234 | 9351 | 9351 | 6234 |
| 767+09 | AH TO | 782+92 | | 1582.67 | 1583 | - | 528 | 1583 | 1583 | 1055 | 1583 | 1583 | 1055 | 1583 | 1583 | 1055 | 1583 | 1583 | 1055 |
| 782+92 | TO | 784+42 | | 149.57 | 150 | - | 50 | 150 | 150 | 100 | 150 | 150 | 100 | 150 | 150 | 100 | 150 | 150 | 100 |
| 784+42 | TO | 784+97 | | 55.43 | 56 | - | 19 | 56 | 56 | 37 | 56 | 56 | 37 | 56 | 56 | 37 | 56 | 56 | 37 |
| 784+97 | TO | 785+70 | | 73 | 73 | - | 24 | 73 | 73 | 49 | 73 | 73 | 49 | 73 | 73 | 49 | 73 | 73 | 49 |
| 785+70 | TO | 786+43 | | 73 | 73 | - | 24 | 73 | 73 | 49 | 73 | 73 | 49 | 73 | 73 | 49 | 219 | 73 | 97 |
| 786+43 | TO | 789+32 | | 289 | 867 | - | 289 | 289 | 289 | 193 | 289 | 289 | 193 | 289 | 289 | 193 | 867 | 289 | 385 |
| 789+32 | TO | 791+00 | | 168 | 504 | - | 168 | 504 | 168 | 224 | 168 | 168 | 112 | 504 | 168 | 224 | 504 | 168 | 224 |
| 791+00 | TO | 810+68 | | 1968 | 1968 | - | 656 | 1968 | 1968 | 1312 | 1968 | 1968 | 1312 | 1968 | 1968 | 1312 | 1968 | 1968 | 1312 |
| 810+68 | TO | 811+57 | | 89 | 267 | - | 89 | 267 | 89 | 119 | 267 | 89 | 119 | 267 | 89 | 119 | 267 | 89 | 119 |
| 811+57 | TO | 817+20 | | 563 | 1689 | - | 563 | 563 | 563 | 375 | 1689 | 563 | 751 | 563 | 563 | 375 | 1689 | 563 | 751 |
| 817+20 | TO | 819+20 | | 200 | 200 | - | 67 | 200 | 200 | 133 | 600 | 200 | 267 | 200 | 200 | 133 | 600 | 200 | 267 |
| 819+20 | TO | 821+20 | | 200 | 200 | - | 67 | 200 | 200 | 133 | 200 | 200 | 133 | 200 | 200 | 133 | 200 | 200 | 133 |
| 821+20 | TO | 822+70 | | 149.74 | 150 | - | 50 | 150 | 150 | 100 | 150 | 150 | 100 | 150 | 150 | 100 | 150 | 150 | 100 |
| 822+70 | TO | 827+13 | BK | 442.87 | 443 | - | 148 | 443 | 443 | 295 | 443 | 443 | 295 | 443 | 443 | 295 | 443 | 443 | 295 |
| 827+12 | AH TO | 831+19 | | 406.92 | 407 | - | 136 | 407 | 407 | 271 | 407 | 407 | 271 | 407 | 407 | 271 | 407 | 407 | 271 |
| 831+19 | TO | 910+80 | | 7961 | 7961 | - | 2654 | 7961 | 7961 | 5307 | 7961 | 7961 | 5307 | 7961 | 7961 | 5307 | 7961 | 7961 | 5307 |
| 910+80 | TO | 911+43 | | 63 | - | - | - | 63 | 63 | 42 | 63 | 63 | 42 | 63 | 63 | 42 | 63 | 63 | 42 |
| 911+43 | TO | 911+60 | | 17 | - | - | - | 17 | 17 | 11 | 17 | 17 | 11 | 17 | - | 6 | - | - | - |
| TOTALS | | | | | 43759 | 1980 | 15246 | 40646 | 42346 | 27663 | 45384 | 42346 | 29243 | 40646 | 42329 | 27658 | 46427 | 42329 | 29584 |
| SHORT TERM PAVT MARKING REM | | | | | | | 265053 | | | | | | | | | | | | |
| TMP PVT MK T3 TAPE 4" | | | | | 795161 | | | | | | | | | | | | | | |

MODEL: Default
FILE NAME: c:\pw_work\pwidot\ferguson\h\d0874886\D366H62-schedules.dgn

| | | | |
|---|---|---|---|
| USER NAME = Brandon.Dyer | DESIGNED - | REVISED - | |
| | DRAWN - | REVISED - | |
| PLOT SCALE = 100.000 ' / in. | CHECKED - | REVISED - | |
| PLOT DATE = 12/15/2023 | DATE - | REVISED - | |

**STATE OF ILLINOIS**
**DEPARTMENT OF TRANSPORTATION**

**SCHEDULES**

SCALE: | SHEET 1 OF 24 SHEETS | STA. TO STA.

| F.A.I. RTE. | SECTION | COUNTY | TOTAL SHEETS | SHEET NO. |
|---|---|---|---|---|
| 57 | (38-6,38-5)RS,BRR,CLV | IROQUOIS | 213 | 50 |
| | | CONTRACT NO. 66H62 | | |
| | | ILLINOIS | FED. AID PROJECT | |

# SHORT TERM PAVEMENT MARKING SCHEDULE

| LOCATION | LENGTH | PRESTAGE | | STAGE 1 | | STAGE 2 | | STAGE 3 | | STAGE 4 | |
|---|---|---|---|---|---|---|---|---|---|---|---|
| | | SHORT TERM PVT MK | SHORT TERM PVT MK REM | SHORT TERM PVT MK | SHORT TERM PVT MK REM | SHORT TERM PVT MK | SHORT TERM PVT MK REM | SHORT TERM PVT MK | SHORT TERM PVT MK REM | SHORT TERM PVT MK | SHORT TERM PVT MK REM |
| | FOOT | FOOT | SQ FT | FOOT | SQ FT | FOOT | SQ FT | FOOT | SQ FT | FOOT | SQ FT |
| **US24** | | | | | | | | | | | |
| RAMP A | 2318 | 4636 | 1545 | 4636 | 1545 | 4636 | 1545 | 4636 | 1545 | 4636 | 1545 |
| RAMP B | 1918 | 3836 | 1279 | 3836 | 1279 | 3836 | 1279 | 3836 | 1279 | 3836 | 1279 |
| RAMP C | 1918 | 3836 | 1279 | 3836 | 1279 | 3836 | 1279 | 3836 | 1279 | 3836 | 1279 |
| RAMP D | 2302 | 4604 | 1535 | 4604 | 1535 | 4604 | 1535 | 4604 | 1535 | 4604 | 1535 |
| **IL54** | | | | | | | | | | | |
| RAMP A | 2413 | 4826 | 1609 | 4826 | 1609 | 4826 | 1609 | 4826 | 1609 | 4826 | 1609 |
| RAMP B | 1889 | 3778 | 1259 | 3778 | 1259 | 3778 | 1259 | 3778 | 1259 | 3778 | 1259 |
| RAMP C | 1853 | 3706 | 1235 | 3706 | 1235 | 3706 | 1235 | 3706 | 1235 | 3706 | 1235 |
| RAMP D | 2436 | 4872 | 1624 | 4872 | 1624 | 4872 | 1624 | 4872 | 1624 | 4872 | 1624 |
| TOTAL | | 34094 | 11365 | 34094 | 11365 | 34094 | 11365 | 34094 | 11365 | 34094 | 11365 |
| SHORT TERM PM REM | | | 56825 | | | | | | | | |
| SHORT TERM PM | | 170470 | | | | | | | | | |

# UNDERDRAIN REPLACEMENT SCHEDULE

| LOCATION & DESCRIPTION | | | | PIPE UNDERDRAINS TYPE 3 | PIPE UNDERDRAINS 4" (SPECIAL) | PIPE UNDERDRAIN REMOVAL | CONCRETE HEADWALLS FOR PIPE DRAINS | REMOVE CONCRETE HEADWALLS FOR PIPE DRAINS |
|---|---|---|---|---|---|---|---|---|
| STATION | TO | STATION | SIDE | FOOT | FOOT | FOOT | EACH | EACH |
| 536+00 | TO | 538+00 | BOTH | 800 | | | | |
| 538+00 | TO | 538+00 | SB | | 20 | | 1 | |
| 538+00 | TO | 538+00 | NB | | 15 | | 1 | |
| 538+00 | TO | 543+00 | BOTH | 2000 | | | | |
| 543+00 | TO | 543+00 | SB | | 30 | | 1 | |
| 543+00 | TO | 543+00 | NB | | 25 | 25 | 1 | 1 |
| 543+00 | TO | 548+50 | BOTH | 2200 | | | | |
| 548+50 | TO | 548+50 | SB | | 25 | | 1 | |
| 548+50 | TO | 548+50 | NB | | 20 | | 1 | |
| 548+50 | TO | 551+00 | BOTH | 1000 | | | | |
| 573+50 | TO | 573+50 | SB | | 30 | 30 | 1 | 1 |
| 618+30 | TO | 618+30 | BOTH | | 50 | 50 | 2 | 2 |
| 644+00 | TO | 649+00 | BOTH | 2000 | | | | |
| 649+00 | TO | 649+00 | SB | | 25 | | 1 | |
| 649+00 | TO | 649+00 | NB | | 25 | | 1 | |
| 649+00 | TO | 651+00 | BOTH | 800 | | | | |
| 748+00 | TO | 748+00 | SB | | 30 | 30 | 1 | 1 |
| 805+00 | TO | 805+00 | NB | | 25 | 25 | 1 | 1 |
| 821+87 | TO | 821+87 | SB | | 30 | 30 | 1 | 1 |
| 827+00 | TO | 827+00 | SB | | 25 | 25 | 1 | 1 |
| 846+00 | TO | 846+00 | SB | | 30 | 30 | 1 | 1 |
| 860+00 | TO | 860+00 | NB | | 25 | 25 | 1 | 1 |
| 909+00 | TO | 909+00 | BOTH | | 50 | 50 | 2 | 2 |
| TOTAL | | | | 8800 | 480 | 320 | 19 | 12 |

# DELINEATOR SCHEDULE (1/3)

NORTHBOUND LANES

| LOCATION | | | | LENGTH | DELINEATORS | LINEAR DELIN PANELS 4" | LINEAR DELIN PANELS 6" | DELINEATOR REMOVAL |
|---|---|---|---|---|---|---|---|---|
| STA. | | TO | STA. | FOOT | EACH | EACH | EACH | EACH |
| 52000 | | TO | 52280.7 BK | 281 | 2 | | | 2 |
| 52282.94 | AH | TO | 53600 | 1317 | 8 | | | 8 |
| 53600 | | TO | 55100 | 1500 | 12 | | | 12 |
| 55100 | | TO | 55154.76 BK | 55 | 2 | | | 2 |
| 55150.99 | AH | TO | 58459.08 | 3308 | 11 | | | 11 |
| 58459.08 | | TO | 58565.75 | 107 | - | | 4 | 4 |
| 58565.75 | | TO | 59175.9 | 610 | 3 | 8 | | 11 |
| 59175.9 | | TO | 59349.9 | 174 | - | 3 | 6 | 9 |
| 59349.9 | | TO | 60304 | 954 | 4 | 12 | | 16 |
| 60304 | | TO | 60530.58 | 227 | - | 3 | 6 | 9 |
| 60530.58 | | TO | 61280 | 749 | - | 10 | | 10 |
| 61280 | | TO | 61798.03 BK | 518 | 3 | | | 3 |
| 61800 | AH | TO | 62598.7 | 799 | 3 | | | 3 |
| 62598.7 | | TO | 63321 | 722 | 9 | | | 9 |
| 63321 | | TO | 64400 | 1079 | 4 | | | 4 |
| 64400 | | TO | 65100 | 700 | - | | 2 | 2 |
| 65100 | | TO | 66129 | 1029 | 4 | | | 4 |
| 66129 | | TO | 66431.07 | 302 | 4 | | | 4 |
| 66431.07 | | TO | 66912.62 BK | 482 | 2 | | | 2 |
| 66912.99 | AH | TO | 66916.76 | 4 | 1 | | | 1 |
| 66916.76 | | TO | 69746.73 | 2830 | 10 | | | 10 |
| 69746.73 | | TO | 69838.37 | 92 | - | | 4 | 4 |
| 69838.37 | | TO | 70665 | 827 | 4 | | | 4 |
| 70665 | | TO | 71015 | 350 | - | | 2 | 2 |
| 71015 | | TO | 71218.67 | 204 | 2 | | | 2 |
| 71218.67 | | TO | 76709.95 BK | 5491 | 19 | | | 19 |
| 76709.33 | AH | TO | 76713.1 | 4 | 2 | | | 2 |
| 76713.1 | | TO | 77786.39 | 1073 | 7 | | | 7 |
| 77786.39 | | TO | 78540 | 754 | 8 | | | 8 |
| 78540 | | TO | 79633.47 | 1093 | 8 | | | 8 |
| 79633.47 | | TO | 79824 | 191 | 2 | | | 2 |
| 79824 | | TO | 79964 | 140 | 1 | | | 1 |
| 79964 | | TO | 80155 | 191 | - | | 6 | 6 |
| 80155 | | TO | 80295 | 140 | 1 | | | 1 |
| 80295 | | TO | 81488 | 1193 | 4 | | | 4 |
| 81488 | | TO | 81766.24 | 278 | 3 | | | 3 |
| 81766.24 | | TO | 82712.61 BK | 946 | 4 | | | 4 |
| 82712.08 | AH | TO | 87124.85 | 4413 | 16 | | | 16 |
| 87124.85 | | TO | 90594.71 | 3470 | 12 | | | 12 |
| 90594.71 | | TO | 91080 | 485 | 2 | | | 2 |
| TOTALS | | | | | 177 | 36 | 30 | 243 |

*QUANTITY INCLUDES DELINEATORS FOR EACH OUTLET OF SMALL CULVERTS

# DELINEATOR SCHEDULE (2/3)

SOUTHBOUND LANES

| LOCATION | | | | LENGTH | DELINEATORS | LINEAR DELIN PANELS 4" | LINEAR DELIN PANELS 6" | DELINEATOR REMOVAL |
|---|---|---|---|---|---|---|---|---|
| STA. | | TO | STA. | FOOT | EACH | EACH | EACH | EACH |
| 52000 | | TO | 52280.7 BK | 281 | 2 | | | 2 |
| 52282.94 | AH | TO | 53600 | 1317 | 8 | | | 8 |
| 53600 | | TO | 55100 | 1500 | 12 | | | 12 |
| 55100 | | TO | 55154.76 BK | 55 | 2 | | | 2 |
| 55150.99 | AH | TO | 58457.26 | 3306 | 11 | | | 11 |
| 58457.26 | | TO | 58563.93 | 107 | - | | 4 | 4 |
| 58563.93 | | TO | 59177.41 | 613 | 3 | | | 3 |
| 59177.41 | | TO | 59351.41 | 174 | - | | 6 | 6 |
| 59351.41 | | TO | 60393.1 | 1042 | 4 | | | 4 |
| 60393.1 | | TO | 60619.68 | 227 | - | | 6 | 6 |
| 60619.68 | | TO | 61798.03 BK | 1178 | 3 | | | 3 |
| 61800 | AH | TO | 63039.61 | 1240 | 5 | | | 5 |
| 63039.61 | | TO | 63336 | 296 | 4 | | | 4 |
| 63336 | | TO | 64400 | 1064 | 4 | | | 4 |
| 64400 | | TO | 65100 | 700 | - | | 2 | 2 |
| 65100 | | TO | 66127 | 1027 | 3 | | | 3 |
| 66127 | | TO | 66854.33 | 727 | 9 | | | 9 |
| 66854.33 | | TO | 66912.62 BK | 58 | 1 | | | 1 |
| 66912.99 | AH | TO | 66916.76 | 4 | 1 | | | 1 |
| 66916.76 | | TO | 69712.86 | 2796 | 7 | | | 7 |
| 69712.86 | | TO | 69802.9 | 90 | - | | 4 | 4 |
| 69802.9 | | TO | 70560 | 757 | 2 | | | 2 |
| 70560 | | TO | 70910 | 350 | - | | 2 | 2 |
| 70910 | | TO | 71218.67 | 309 | 1 | | | 1 |
| 71218.67 | | TO | 76709.95 BK | 5491 | 16 | | | 16 |
| 76709.33 | AH | TO | 78441.57 | 1732 | 15 | | | 15 |
| 78441.57 | | TO | 78711 | 269 | 3 | | | 3 |
| 78711 | | TO | 79633.47 | 922 | 6 | | | 6 |
| 79633.47 | | TO | 79824 | 191 | 2 | | | 2 |
| 79824 | | TO | 79964 | 140 | 2 | | | 2 |
| 79964 | | TO | 80155 | 191 | - | | 6 | 6 |
| 80155 | | TO | 80295 | 140 | 1 | | | 1 |
| 80295 | | TO | 81496 | 1201 | 4 | | | 4 |
| 81496 | | TO | 82269.74 | 774 | 8 | | | 8 |
| 82269.74 | | TO | 82712.61 BK | 443 | 3 | | | 3 |
| 82712.08 | AH | TO | 87124.85 | 4413 | 12 | | | 12 |
| 87124.85 | | TO | 90594.71 | 3470 | 10 | | | 10 |
| 90594.71 | | TO | 91080 | 485 | 6 | | | 6 |
| 87124.85 | | TO | 90594.71 | 3470 | 12 | | | 12 |
| 90594.71 | | TO | 91080 | 485 | 2 | | | 2 |
| TOTALS | | | | | 184 | 0 | 30 | 214 |

*QUANTITY INCLUDES DELINEATORS FOR EACH OUTLET OF SMALL CULVERTS

# DELINEATOR SCHEDULE (3/3)

| INTERCHANGE RAMPS | | | | | |
|---|---|---|---|---|---|
| LOCATION | | | | SMALL CULVERTS | DELINEATORS | DELINEATOR REMOVAL |
| STA. | TO | STA. | LENGTH | | EACH | EACH |
| US24 INTERCHANGE | | | | | | |
| RAMP A | | | | | | |
| 0+00 | TO | 1+46 | 146 | | 2 | 2 |
| 1+46 | TO | 12+20 | 1074 | 1 | 13 | 13 |
| 12+20 | TO | 23+18 | 1098.4 | | 11 | 11 |
| RAMP B | | | | | | |
| 0+00 | TO | 7+00 | 700 | | 7 | 7 |
| 7+00 | TO | 17+60 | 1060 | 1 | 13 | 13 |
| 17+60 | TO | 19+18 | 158.17 | | 2 | 2 |
| RAMP C | | | | | | |
| 0+00 | TO | 6+98 | 698 | | 7 | 7 |
| 6+98 | TO | 17+67 | 1069 | | 11 | 11 |
| 17+67 | TO | 19+18 | 151.29 | 1 | 4 | 4 |
| RAMP D | | | | | | |
| 0+00 | TO | 1+47 | 147 | 1 | 4 | 4 |
| 1+47 | TO | 11+96 | 1049 | | 11 | 11 |
| 11+96 | TO | 23+02 | 1105.59 | | 12 | 12 |
| | | | | | | |
| IL54 INTERCHANGE | | | | | | |
| RAMP A | | | | | | |
| 0+00 | TO | 1+15 | 115 | | 2 | 2 |
| 1+15 | TO | 12+93 | 1178 | 1 | 14 | 14 |
| 12+93 | TO | 24+13 | 1119.68 | | 12 | 12 |
| RAMP B | | | | | | |
| 0+00 | TO | 7+24 | 724 | | 8 | 8 |
| 7+24 | TO | 17+55 | 1031 | 1 | 13 | 13 |
| 17+55 | TO | 18+89 | 134.23 | | 2 | 2 |
| RAMP C | | | | | | |
| 0+00 | TO | 7+18 | 718 | | 8 | 8 |
| 7+18 | TO | 17+53 | 1035 | 1 | 13 | 13 |
| 17+53 | TO | 18+53 | 100.29 | | 2 | 2 |
| RAMP D | | | | | | |
| 0+00 | TO | 1+23 | 123 | | 2 | 2 |
| 1+23 | TO | 12+32 | 1109 | 2 | 16 | 16 |
| 12+32 | TO | 24+36 | 1204.25 | | 13 | 13 |
| | | | | | | |
| TOTALS | | | | 9 | 202 | 202 |

*QUANTITY INCLUDES DELINEATORS FOR EACH OUTLET OF SMALL CULVERTS

# CROSSOVER SCHEDULE

| LOCATION | HMA SURF REM 2" | PAVED SHOULDER REMOVAL 14" | BIT MAT TACK COAT | HMA SURF CSE 2" IL 9.5 POLY N70 MIX D | HMA BIND CSE, 8" IL19.0 N70 POLY | SUBBASE GRANULAR MATL 4" TYPE A | FURNISHED EXCAVATION | DELINEATORS |
|---|---|---|---|---|---|---|---|---|
| STATION | SQ YD | SQ YD | POUND | TON | TON | SQ YD | CU YD | EACH |
| 847+00 | 250 | 1333 | 149 | 27.9 | 955.7 | 2244 | 963 | 4 |
| TOTAL | 250 | 1333 | 149 | 27.9 | 955.7 | 2244 | 963 | 4 |

*SEE MAINTENANCE CROSSOVER DETAILS

# MILE MARKER SCHEDULE

| MILE | SIDE | MILE POST MARKER ASSY SPECIAL | TELESCOPING STEEL SIGN SUPPORT | REM SIGN PANEL ASSY TY A |
|---|---|---|---|---|
| | | EACH | FOOT | EACH |
| MM 279 | NB/SB | 2 | 30 | 2 |
| MM 280 | NB/SB | 2 | 30 | 2 |
| MM 281 | NB/SB | 2 | 30 | 2 |
| MM 282 | NB/SB | 2 | 30 | 2 |
| MM 283 | NB/SB | 2 | 30 | 2 |
| MM 284 | NB/SB | 2 | 30 | 2 |
| MM 285 | NB/SB | 2 | 30 | 2 |
| MM 286 | NB/SB | 3 | 30 | 3 |
| TOTAL | | 14 | 210 | 14 |

# SMART TRAFFIC CONTROL SCHEDULE

| | DESCRIPTION | UNIT | QTY |
|---|---|---|---|
| | REAL-TIME TRAFFIC CONTROL SENSOR UNIT | WEEK | 280 |
| * | CHANGEABLE MESSAGE SIGN (SPECIAL) | CAL DA | 2744 |
| | SMART TRAFFIC MONITORING SYSTEM | CAL WK | 56 |
| | SMART TRAFFIC MONITORING DEVICE | CAL WK | 280 |
| | TRAFFIC CONTROL SURVEILLANCE | CAL DA | 140 |
| | TEMPORARY RUMBLE STRIPS (SPECIAL) | EACH | 4 |

*ADDITIONAL CHANGEABLE MESSAGE SIGNS ADDED FOR INTERCHANGES

# PERMANENT SURVEY MARKER SCHEDULE

| MONUMENT NUMBER | DESCRIPTION | EXISTING MONUMENT TYPE | PROPOSED MONUMENT TYPE | MONUMENT RECORD TO BE RECORDED | RESPONSIBILITY |
|---|---|---|---|---|---|
| | | | | | |
| N/A | NO PERMANENT SURVEY MARKERS OR | N/A | N/A | N/A | N/A |
| | OTHER MARKERS TO BE SET OR RESET. | | | | |
| | | | | | |

ONLY THE ORIGINAL SCOPE OF THIS JOB HAS BEEN SEARCHED FOR MONUMENTS. R.E. MUST INFORM PLATS AND PLANS TO SEARCH FOR ADDITIONAL MONUMENTS PRIOR TO MILLING IF ADDENDUMS HAVE BEEN ADDED TO THIS JOB.

UNKNOWN MONUMENTS MAY EXIST. IF AN UNLISTED MONUMENT IS FOUND, R.E. IS REQUIRED TO PROTECT THE MONUMENT FROM DAMAGE UNTIL A PLATS AND PLANS LAND SURVEYOR CAN DOCUMENT THE MONUMENT. PLATS AND PLANS WILL RESET SUCH MONUMENTS IN KIND FOLLOWING CONSTRUCTION.

NO MONUMENT RECORDS ARE REQUIRED FOR THIS JOB.

# SEEDING SCHEDULE

| LOCATION | NOTES | LENGTH | WIDTH | AREA | SEEDING CLASS 2A | NITRO FERT NUT | PHOSP FERT NUT | POT FERT NUT | EROSION CONTROL BLANKET |
|---|---|---|---|---|---|---|---|---|---|
| STA TO STA | | FOOT | FOOT | SQ YD | ACRE | LB | LB | LB | SQ YD |
| | | | | | | | | | |
| * SOUTHBOUND LANES | | | | | | | | | |
| 526+00 TO 528+00 | DITCH GRADING | 200 | 6 | 133 | 0.028 | 2.5 | 2.5 | 2.5 | 136 |
| 540+90 TO 540+90 | DITCH GRADING | 100 | 6 | 67 | 0.014 | 1.5 | 1.5 | 1.5 | 68 |
| 545+00 TO 547+00 | DITCH GRADING | 200 | 6 | 133 | 0.028 | 2.5 | 2.5 | 2.5 | 136 |
| 580+80 TO 582+30 | DITCH GRADING | 150 | 10 | 167 | 0.035 | 3 | 3 | 3 | 169 |
| 660+00 TO 661+00 | DITCH GRADING | 100 | 6 | 67 | 0.014 | 1.5 | 1.5 | 1.5 | 68 |
| 751+80 TO 753+30 | DITCH GRADING | 150 | 6 | 100 | 0.021 | 2 | 2 | 2 | 102 |
| 799+00 TO 800+00 | DITCH GRADING | 100 | 6 | 67 | 0.014 | 1.5 | 1.5 | 1.5 | 68 |
| 807+80 TO 809+30 | DITCH GRADING | 150 | 6 | 100 | 0.021 | 2 | 2 | 2 | 102 |
| 853+80 TO 854+80 | DITCH GRADING | 100 | 6 | 67 | 0.014 | 1.5 | 1.5 | 1.5 | 68 |
| 875+00 TO 877+00 | DITCH GRADING | 200 | 6 | 133 | 0.028 | 2.5 | 2.5 | 2.5 | 136 |
| 896+00 TO 898+00 | DITCH GRADING | 200 | 6 | 133 | 0.028 | 2.5 | 2.5 | 2.5 | 136 |
| | | | | | | | | | |
| * NORTHBOUND LANES | | | | | | | | | |
| 549+80 TO 550+30 | DITCH GRADING | 50 | 10 | 56 | 0.012 | 1 | 1 | 1 | 58 |
| 622+00 TO 622+00 | DITCH GRADING | 40 | 10 | 44 | 0.010 | 1 | 1 | 1 | 48 |
| 629+00 TO 630+00 | DITCH GRADING | 100 | 6 | 67 | 0.014 | 1.5 | 1.5 | 1.5 | 68 |
| 688+20 TO 690+20 | DITCH GRADING | 200 | 6 | 133 | 0.028 | 2.5 | 2.5 | 2.5 | 136 |
| 759+00 TO 761+00 | DITCH GRADING | 200 | 8 | 178 | 0.037 | 3.5 | 3.5 | 3.5 | 179 |
| | | | | | | | | | |
| * US24 INTERCHANGE | | | | | | | | | |
| 17+50 TO 18+50 | DITCH GRADING | 100 | 6 | 67 | 0.014 | 1.5 | 1.5 | 1.5 | 68 |
| 0+50 TO 1+50 | DITCH GRADING | 100 | 6 | 67 | 0.014 | 1.5 | 1.5 | 1.5 | 68 |
| 17+50 TO 19+00 | DITCH GRADING | 150 | 6 | 100 | 0.021 | 2 | 2 | 2 | 102 |
| | | | | | | | | | |
| ** DRAINAGE REPAIR | | | | | | | | | |
| 594+25 | 24" RCP/CMP | 12 | 6 | 8 | 0.002 | 1 | 1 | 1 | 10 |
| 610+00 | 24" RCP | 6 | 6 | 4 | 0.001 | 1 | 1 | 1 | 5 |
| 622+00 | 30/24" RCP/CMP | 10 | 3.5 | 4 | 0.001 | 1 | 1 | 1 | 5 |
| 17+50 (US24 RAMP C) | 24" RCP | 10 | 3.5 | 4 | 0.001 | 1 | 1 | 1 | 5 |
| 661+00 | 24" RCP | 18 | 3.5 | 7 | 0.002 | 1 | 1 | 1 | 10 |
| 703+00 | 24" RCP/CMP | 44 | 3.5 | 17 | 0.004 | 1 | 1 | 1 | 19 |
| 711+50 | 24" RCP | 10 | 3.5 | 4 | 0.001 | 1 | 1 | 1 | 5 |
| 766+00 | 24" RCP | 10 | 3.5 | 4 | 0.001 | 1 | 1 | 1 | 5 |
| 793+42 | 36" RCP | 8 | 5 | 4 | 0.001 | 1 | 1 | 1 | 5 |
| 9+00 (IL54 RAMP C) | 36" RCP | 18 | 5 | 10 | 0.003 | 1 | 1 | 1 | 15 |
| | | | | | | | | | |
| CROSSOVER WIDENING | | | | | | | | | |
| 847+00 | | | | 1312 | 0.272 | 24.5 | 24.5 | 24.5 | 1316 |
| | | | | | | | | | |
| TOTAL | | | | | 0.75 | 72 | 72 | 72 | 3316 |

*SEE GRADING AND SHAPING DITCHES SCHEDULE

** SEE DRAINAGE REPAIR SCHEDULE

MODEL: Default
FILE NAME: c:\pw_work\pwidot\cody.m.johnson@illinois.gov\d0874886\D368H62-schedules.dgn

| | | |
|---|---|---|
| USER NAME = Joseph.Zagar | DESIGNED - | REVISED - |
| | DRAWN - | REVISED - |
| PLOT SCALE = 100.000 ' / in. | CHECKED - | REVISED - |
| PLOT DATE = 1/4/2024 | DATE - | REVISED - |

**STATE OF ILLINOIS**
**DEPARTMENT OF TRANSPORTATION**

**SCHEDULES**

SCALE: | SHEET 1 OF 24 SHEETS | STA. TO STA.

| F.A.I. RTE. | SECTION | COUNTY | TOTAL SHEETS | SHEET NO. |
|---|---|---|---|---|
| 57 | (38-6,38-5)RS,BRR,CLV | IROQUOIS | 213 | 55 |

CONTRACT NO. 66H62

ILLINOIS | FED. AID PROJECT

# GRADING & SHAPING DITCHES SCHEDULE

| STATION | | | LENGTH | GRADE & SHAPE DITCH | FLOW DIRECTION | REMARKS |
|---|---|---|---|---|---|---|
| STA | TO | STA | FOOT | FOOT | | |
| SOUTHBOUND | | | | | | |
| 526+00 | TO | 528+00 | 200 | 200 | NORTH | |
| 540+90 | TO | 540+90 | 100 | 100 | WEST | GRADE DOWNSTREAM FROM CULVERT #5083 OUTLET |
| 545+00 | TO | 547+00 | 200 | 200 | SOUTH | |
| 580+80 | TO | 582+30 | 150 | 150 | SOUTH | |
| 660+00 | TO | 661+00 | 100 | 100 | NORTH | |
| 751+80 | TO | 753+30 | 150 | 150 | SOUTH | |
| 799+00 | TO | 800+00 | 100 | 100 | NORTH | |
| 807+80 | TO | 809+30 | 150 | 150 | NORTH | |
| 853+80 | TO | 854+80 | 100 | 100 | SOUTH | |
| 875+00 | TO | 877+00 | 200 | 200 | SOUTH | |
| 896+00 | TO | 898+00 | 200 | 200 | SOUTH | |
| NORTHBOUND | | | | | | |
| 549+80 | TO | 550+30 | 50 | 50 | SOUTH | |
| 622+00 | TO | 622+00 | 40 | 40 | EAST | GRADE DOWNSTREAM FROM CULVERT #3947 OUTLET |
| 629+00 | TO | 630+00 | 100 | 100 | SOUTH | |
| 688+20 | TO | 690+20 | 200 | 200 | SOUTH | |
| 759+00 | TO | 761+00 | 200 | 200 | NORTH | |
| US-24 INTERCHANGE | | | | | | |
| 17+50 | TO | 18+50 | 100 | 100 | SOUTH | RAMP C NW |
| 0+50 | TO | 1+50 | 100 | 100 | NORTH | RAMP D SW |
| 17+50 | TO | 19+00 | 150 | 150 | NORTH | RAMP B SE |
| TOTALS | | | 2,590 | 2,590 | | |

STATIONS ARE APPROXIMATE

* SEE PLAN DETAILS FOR REGRADING REQUIREMENTS

# SIGNAGE SCHEDULE

| DESCRIPTION | NUMBER | STATION | EOP TO NEAR POST CL OFFSET FOOT | SIDE | WORK | PROPOSED WIDTH FOOT | PROPOSED HEIGHT FOOT | PROPOSED AREA SQ FT | PROPOSED POSTS EACH | CLEAR HEIGHT FOOT | POST BEAM TYPE | POST LENGTH POST 1 FOOT | POST LENGTH POST 2 FOOT | REMOVE GROUND MOUNTED SIGN SUPPORT EACH | REMOVE CONCRETE FDN GROUND MOUNT EACH | REMOVE SIGN PANEL TY 3 SQ FT | SIGN PANEL TY 3 SQ FT | STRUC ST SIGN SUPP BREAKAWAY POUND |
|---|---|---|---|---|---|---|---|---|---|---|---|---|---|---|---|---|---|---|
| **SOUTHBOUND** | | | | | | | | | | | | | | | | | | |
| EXIT 283 1 MILE | SB-1 | 581+00 | 33.0 | RT | RR | 14.5 | 14.5 | 210.3 | 2 | 13.6 | W14X38 | 25.9 | 28.1 | 1 | 1 | 266.5 | 210.3 | 2052 |
| EXIT 283 0.5 MILE | SB-2 | 611+50 | 32.9 | RT | PR | 14.5 | 14.5 | 210.3 | 2 | 13.5 | W14X38 | 25.9 | 28 | 0 | 0 | 0 | 210.3 | 2049 |
| IROQUOIS COUNTY FAIRGROUNDS | | 613+00 | 30 | RT | REM | 0 | 0 | 0 | | | | | | 1 | 1 | 140 | 0.0 | 0 |
| EXIT 283 0.5 MILE | | 620+50 | 30 | RT | REM | 0 | 0 | 0 | | | | | | 1 | 1 | 279 | 0.0 | 0 |
| IROQUOIS COUNTY FAIRGROUNDS | SB-3 | 620+50 | 33.4 | RT | PR | 17 | 7.5 | 127.5 | 2 | 14 | W10X26 | 19 | 21.5 | 0 | 0 | 0 | 127.5 | 1053 |
| EXIT 283 ARROW | SB-4 | 630+40 | 32.9 | RT | RR | 14.5 | 15.5 | 224.8 | 2 | 13.5 | W14X38 | 26.9 | 29 | 1 | 1 | 217.5 | 224.8 | 2125 |
| EXIT 280 1 MILE | SB-5 | 736+80 | 32.2 | RT | RR | 11 | 14.5 | 159.5 | 2 | 12.8 | W14X38 | 25.7 | 27.3 | 1 | 1 | 208.5 | 159.5 | 2014 |
| EXIT 280 0.5 MILE | SB-6 | 761+60 | 32.2 | RT | RR | 11 | 14.5 | 159.5 | 2 | 12.8 | W14X38 | 25.7 | 27.3 | 1 | 1 | 168 | 159.5 | 2014 |
| EXIT 280 ARROW | SB-7 | 784+50 | 32.2 | RT | RR | 11 | 15.5 | 170.5 | 2 | 12.8 | W14X38 | 26.7 | 28.3 | 1 | 1 | 157.5 | 170.5 | 2090 |
| **NORTHBOUND** | | | | | | 0 | 0 | | | | | | | | | | | |
| IROQUOIS COUNTY FAIRGROUNDS | NB-1 | 693+50 | 33.4 | LT | RR | 17 | 7.5 | 127.5 | 2 | 14 | W10X26 | 19 | 21.5 | 1 | 1 | 116 | 127.5 | 1053 |
| EXIT 283 1 MILE | NB-2 | 712+00 | 32.9 | LT | RR | 14.5 | 14.5 | 210.3 | 2 | 13.5 | W14X38 | 25.9 | 28 | 1 | 1 | 266.5 | 210.3 | 2048.2 |
| EXIT 280 ARROW | NB-3 | 817+50 | 32.2 | LT | RR | 11 | 15.5 | 170.5 | 2 | 12.8 | W14X38 | 26.7 | 28.3 | 1 | 1 | 143 | 170.5 | 2090 |
| EXIT 280 0.5 MILE | NB-4 | 841+00 | 32.2 | LT | RR | 11 | 14.5 | 159.5 | 2 | 12.8 | W14X38 | 25.7 | 27.3 | 1 | 1 | 108 | 159.5 | 2014 |
| EXIT 280 1 MILE | NB-5 | 865+00 | 32.2 | LT | RR | 11 | 14.5 | 159.5 | 2 | 12.8 | W14X38 | 25.7 | 27.3 | 1 | 1 | 174 | 159.5 | 2014 |
| **ON IL54 OVER I57** | | | | | | | | | | | | | | | | | | |
| WB: 57S Up Arrow Champaign/57N Rt Arrow Kankakee (install 100 ft east of entrance ramp) | 54-1 | | 32.3 | LT | PR | 11.5 | 10.5 | 120.8 | 2 | 15.6 | W14X30 | 23.8 | 26.1 | 0 | 0 | 0 | 120.8 | 1497 |
| EB: 57N Up Arrow Kankakee / 57S Rt Arrow Champaign (install 100 ft west of entrance ramp) | 54-2 | | 32.3 | RT | PR | 11.5 | 10.5 | 120.8 | 2 | 15.6 | W14X30 | 23.8 | 26.1 | 0 | 0 | 0 | 120.8 | 1497 |
| TOTAL | | | | | | | | 2331.3 | | | | 630.96 | | 12 | 12 | 2244.5 | 2331 | 25610.2 |

*POST LENGTHS TO BE VERIFIED WITH FIELD MEASUREMENT PRIOR TO ORDERING

MODEL: Default
FILE NAME: c:\pw_work\pwidot\cody.m.johnson@illinois.gov\d0874886\D36H62-schedules.dgn

| | | |
|---|---|---|
| USER NAME = Cody.M.Johnson | DESIGNED - | REVISED - |
| | DRAWN - | REVISED - |
| PLOT SCALE = 100.000 ' / in. | CHECKED - | REVISED - |
| PLOT DATE = 12/18/2023 | DATE - | REVISED - |

**STATE OF ILLINOIS**
**DEPARTMENT OF TRANSPORTATION**

**SCHEDULES**

SCALE: | SHEET 24 OF 24 SHEETS | STA. | TO STA.

| F.A.I. RTE. | SECTION | COUNTY | TOTAL SHEETS | SHEET NO. |
|---|---|---|---|---|
| 57 | (38-6,38-5)RS,BRR,CLV | IROQUOIS | 213 | 48 |

CONTRACT NO. 66H62

ILLINOIS | FED. AID PROJECT

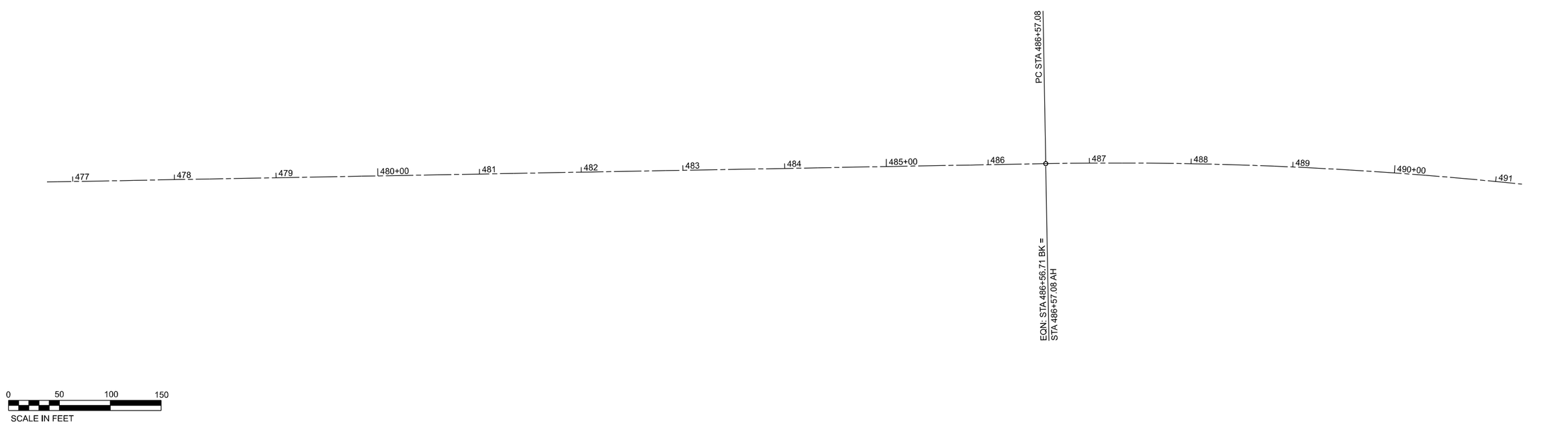


MODEL: Default
FILE NAME: pw://idot-pw.bentley.com:PWIDOT/Documents/IDOT Offices/District 3/ORD Projects/D386H62/CADData/CADsheets/66H62 Alignment

| | | | |
|---|---|---|---|
| USER NAME = Cody.M.Johnson | DESIGNED - | REVISED - | |
| | DRAWN - | REVISED - | |
| PLOT SCALE = 100.000 ' / in. | CHECKED - | REVISED - | |
| PLOT DATE = 12/15/2023 | DATE - | REVISED - | |

**STATE OF ILLINOIS**
**DEPARTMENT OF TRANSPORTATION**

**ALIGNMENT**

SCALE: | SHEET 1 OF 22 SHEETS | STA. | TO STA.

| F.A.I RTE. | SECTION | COUNTY | TOTAL SHEETS | SHEET NO. |
|---|---|---|---|---|
| 57 | (38-6,38-5)RS,BRR,CLV | IROQUOIS | 213 | 58 |
| | | CONTRACT NO. 66H62 | | |
| | | ILLINOIS | FED. AID PROJECT | |

Long Section Number

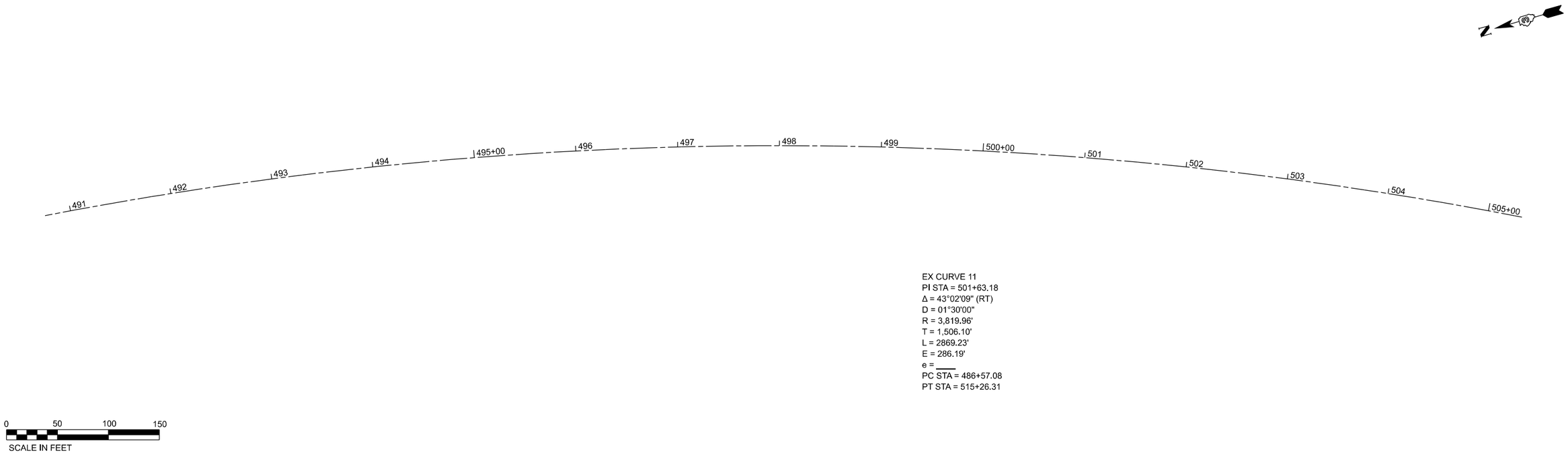


EX CURVE 11
PI STA = 501+63.18
Δ = 43°02'09" (RT)
D = 01°30'00"
R = 3,819.96'
T = 1,506.10'
L = 2869.23'
E = 286.19'
e = ____
PC STA = 486+57.08
PT STA = 515+26.31

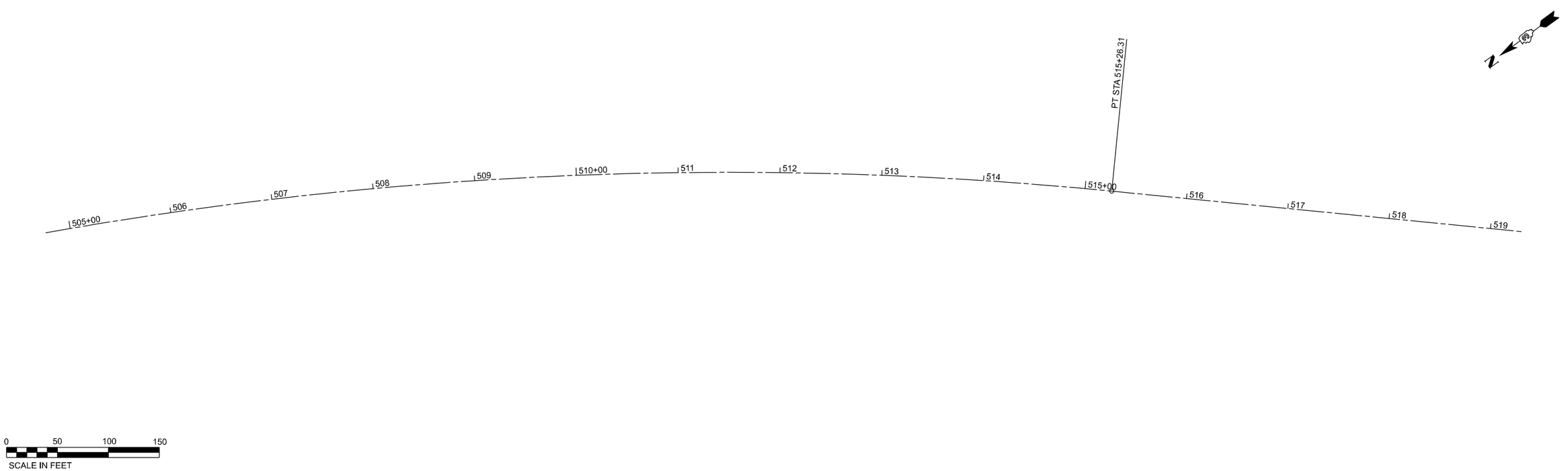


MODEL: Default
FILE NAME: pw://idot-pw.bentley.com:PWIDOT/Documents/IDOT Offices/District 3/ORD Projects/D366H62/CADData/CADsheets/66H62 Alignment

| | | | |
|---|---|---|---|
| USER NAME = Cody.M.Johnson | DESIGNED - | REVISED - | STATE OF ILLINOIS DEPARTMENT OF TRANSPORTATION |
| | DRAWN - | REVISED - | |
| PLOT SCALE = 100,000 ' / in. | CHECKED - | REVISED - | |
| PLOT DATE = 12/15/2023 | DATE - | REVISED - | |

**ALIGNMENT**

SCALE: | SHEET 2 OF 22 SHEETS | STA. | TO STA.

| F.A.I RTE. | SECTION | COUNTY | TOTAL SHEETS | SHEET NO. |
|---|---|---|---|---|
| 57 | (38-6,38-5)RS,BRR,CLV | IROQUOIS | 213 | 59 |
| | | CONTRACT NO. 66H62 | | |
| | | ILLINOIS FED. AID PROJECT | | |

Long Section Number

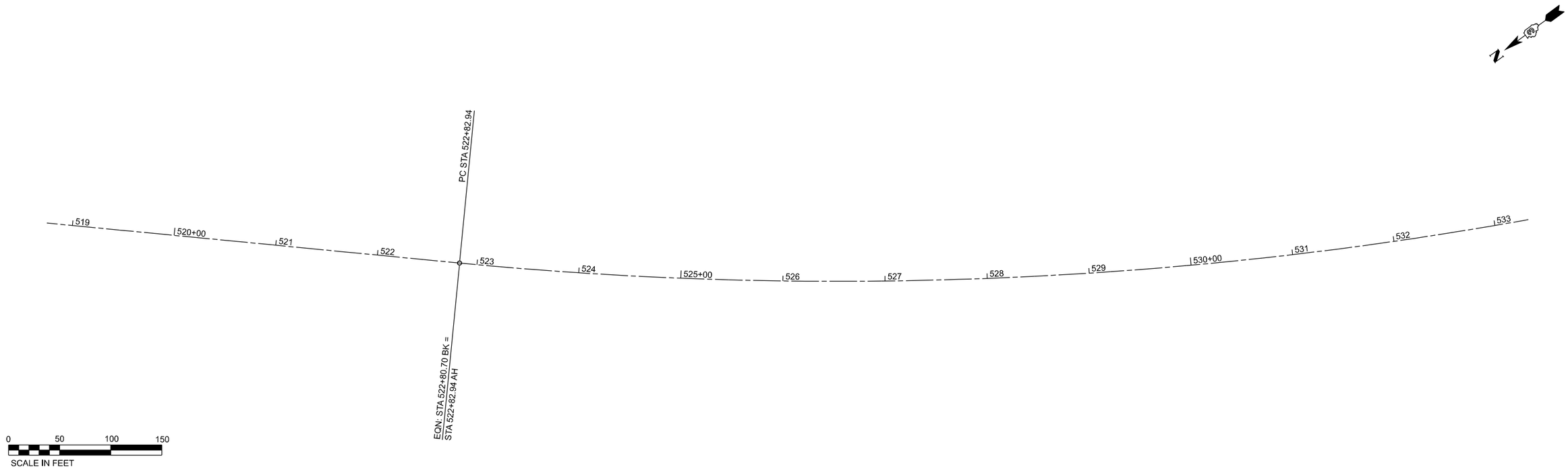


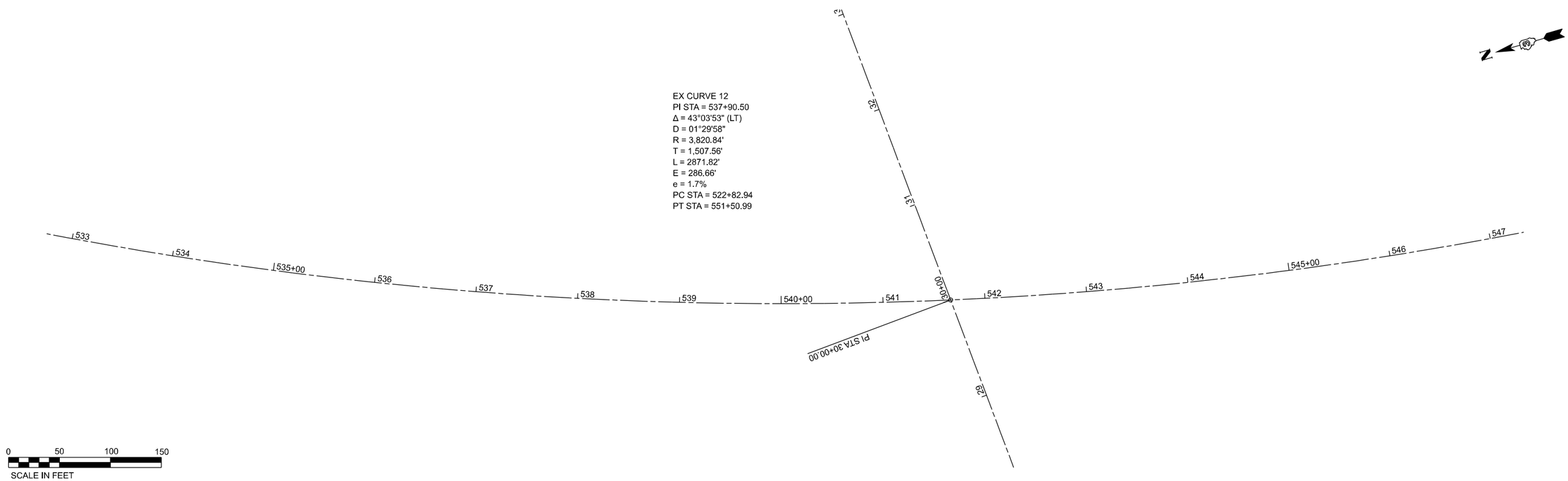


MODEL: Default
FILE NAME: pw://idot-pw.bentley.com:PWIDOT/Documents/IDOT Offices/District 3/ORD Projects/D366H62/CADData/CADsheets/66H62 Alignment

| | | | |
|---|---|---|---|
| USER NAME = Cody.M.Johnson | DESIGNED - | REVISED - | |
| | DRAWN - | REVISED - | |
| PLOT SCALE = 100.000 ' / in. | CHECKED - | REVISED - | |
| PLOT DATE = 12/15/2023 | DATE - | REVISED - | |

**STATE OF ILLINOIS**
**DEPARTMENT OF TRANSPORTATION**

**ALIGNMENT**

SCALE: | SHEET 3 OF 22 SHEETS | STA. | TO STA.

| F.A.I RTE. | SECTION | COUNTY | TOTAL SHEETS | SHEET NO. |
|---|---|---|---|---|
| 57 | (38-6,38-5)RS,BRR,CLV | IROQUOIS | 213 | 60 |
| | | CONTRACT NO. 66H62 | | |
| | | ILLINOIS FED. AID PROJECT | | |

Long Section Number

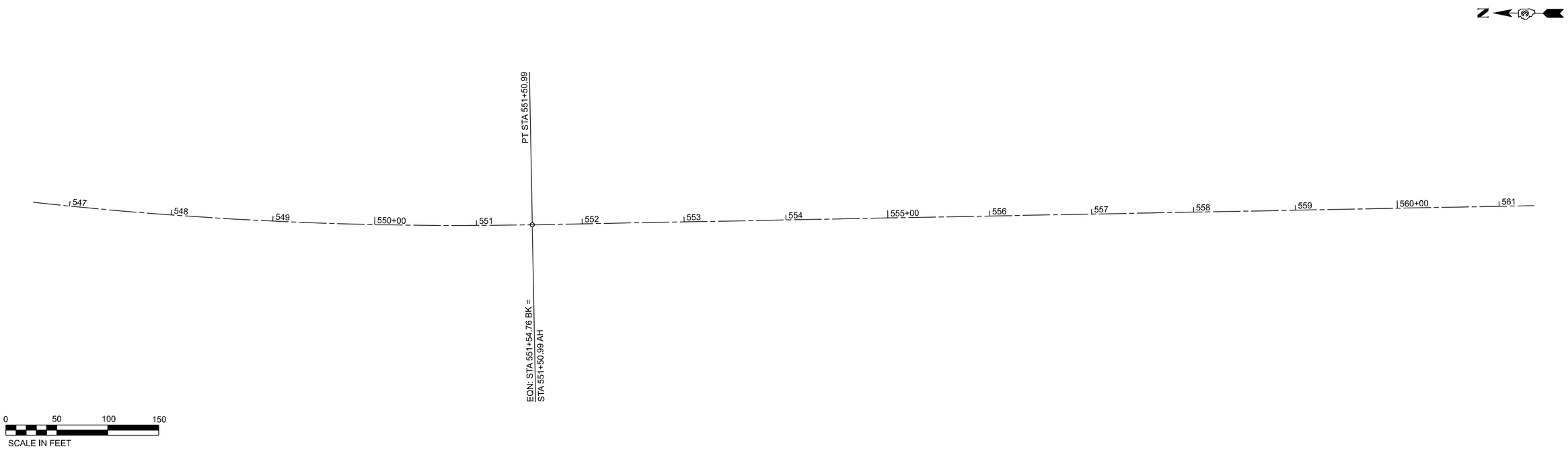


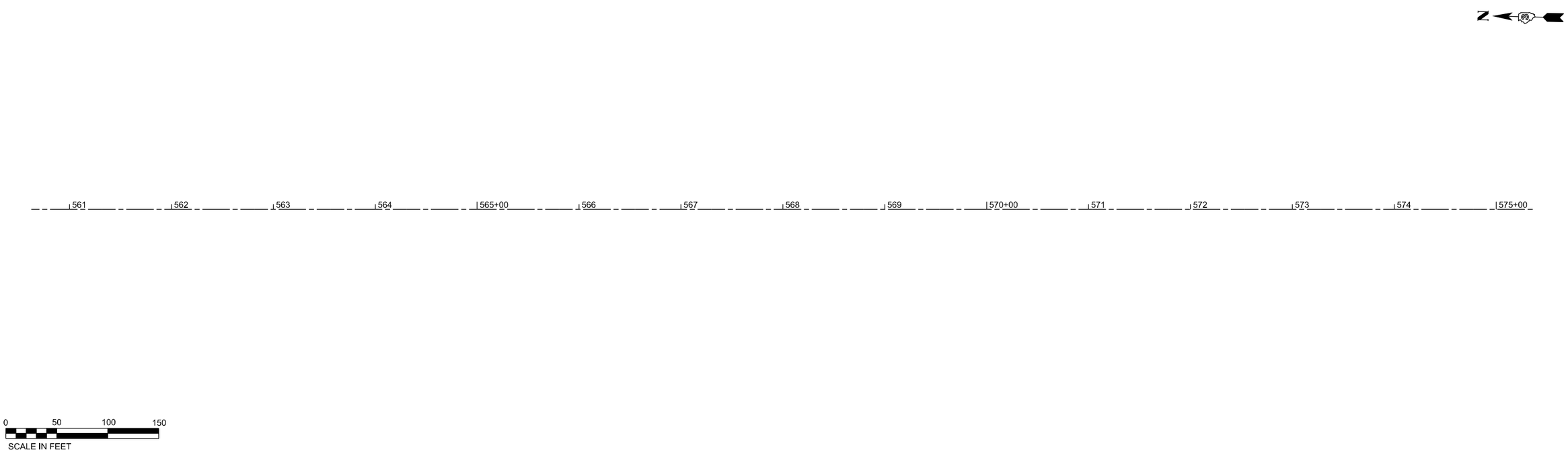


MODEL: Default
FILE NAME: pw://ildot-pw.bentley.com:PWIDOT/Documents/IDOT Offices/District 3/ORD Projects/D398H62/CADData/CADsheets/66H62 Alignment

| | | | |
|---|---|---|---|
| USER NAME = Cody.M.Johnson | DESIGNED - | REVISED - | |
| | DRAWN - | REVISED - | |
| PLOT SCALE = 100,000 ' / in. | CHECKED - | REVISED - | |
| PLOT DATE = 12/15/2023 | DATE - | REVISED - | |

**STATE OF ILLINOIS**
**DEPARTMENT OF TRANSPORTATION**

**ALIGNMENT**

SCALE: | SHEET 4 OF 22 SHEETS | STA. TO STA.

| F.A.I. RTE. | SECTION | COUNTY | TOTAL SHEETS | SHEET NO. |
|---|---|---|---|---|
| 57 | (38-6,38-5)RS,BRR,CLV | IROQUOIS | 213 | 61 |
| | | CONTRACT NO. 66H62 | | |
| | ILLINOIS | FED. AID PROJECT | | |

Long Section Number

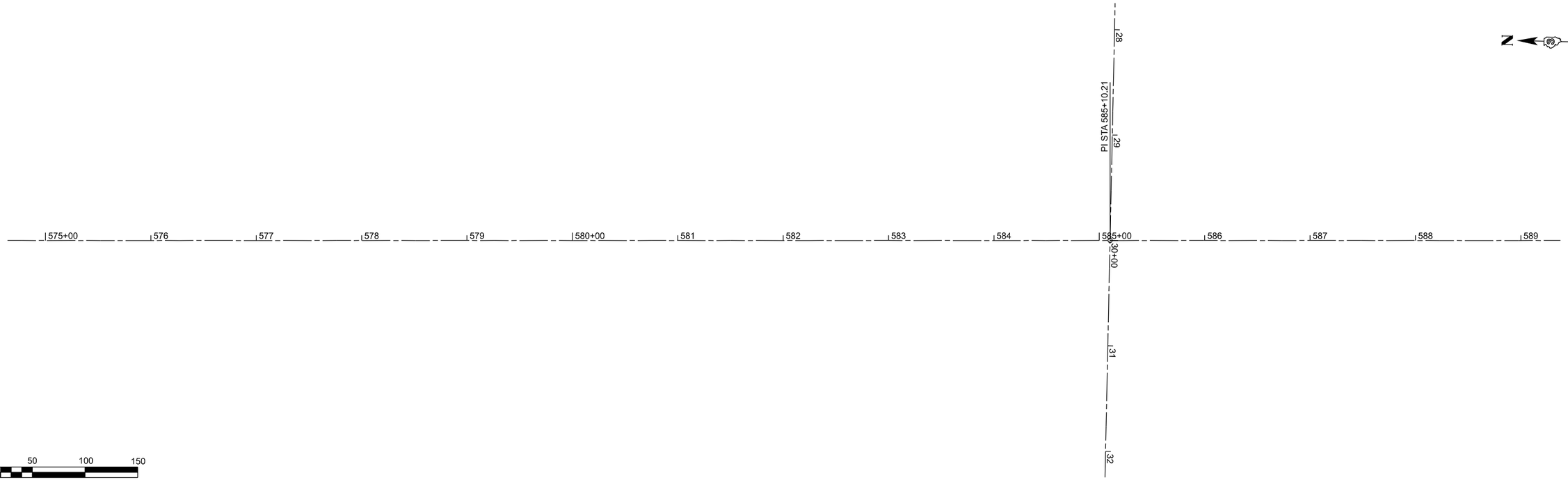


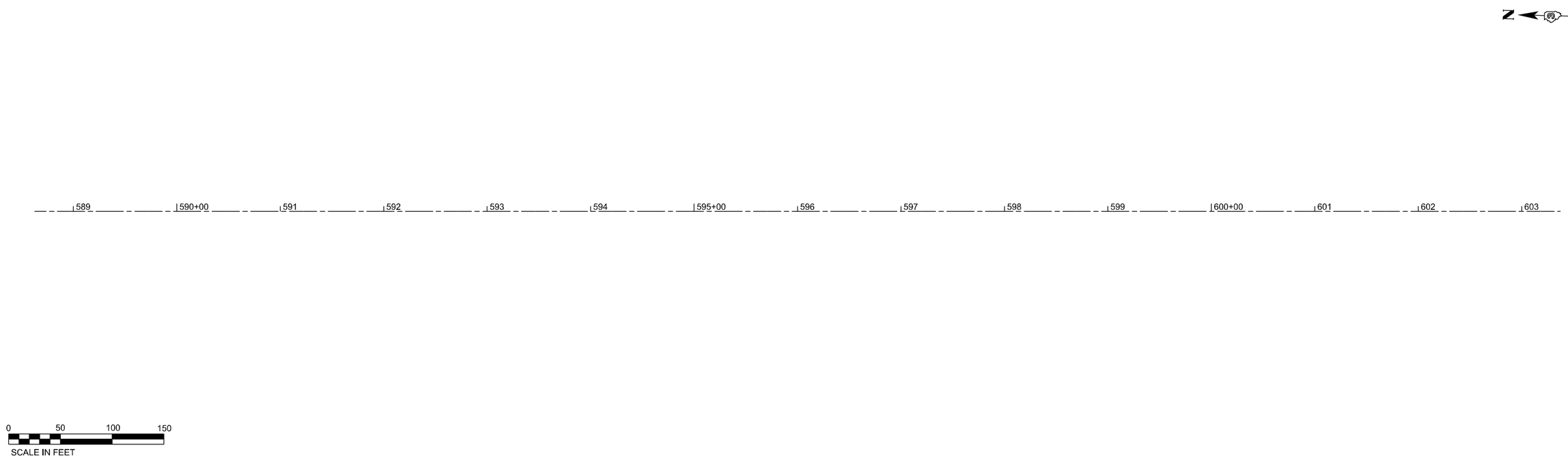


MODEL: Default
FILE NAME: pw://idotpw.bentley.com:PWIDOT/Documents/IDOT Offices/District 3/ORD Projects/D398482/CADData/CADsheets/66H62 Alignment

| | | | |
|---|---|---|---|
| USER NAME = Cody.M.Johnson | DESIGNED - | REVISED - | |
| | DRAWN - | REVISED - | |
| PLOT SCALE = 100,000 ' / in. | CHECKED - | REVISED - | |
| PLOT DATE = 12/15/2023 | DATE - | REVISED - | |

**STATE OF ILLINOIS**
**DEPARTMENT OF TRANSPORTATION**

**ALIGNMENT**

SCALE: | SHEET 5 OF 22 SHEETS | STA. | TO STA.

| F.A.I. RTE. | SECTION | COUNTY | TOTAL SHEETS | SHEET NO. |
|---|---|---|---|---|
| 57 | (38-6,38-5)RS,BRR,CLV | IROQUOIS | 213 | 62 |
| | | CONTRACT NO. 66H62 | | |
| | ILLINOIS | FED. AID PROJECT | | |

Long Section Number

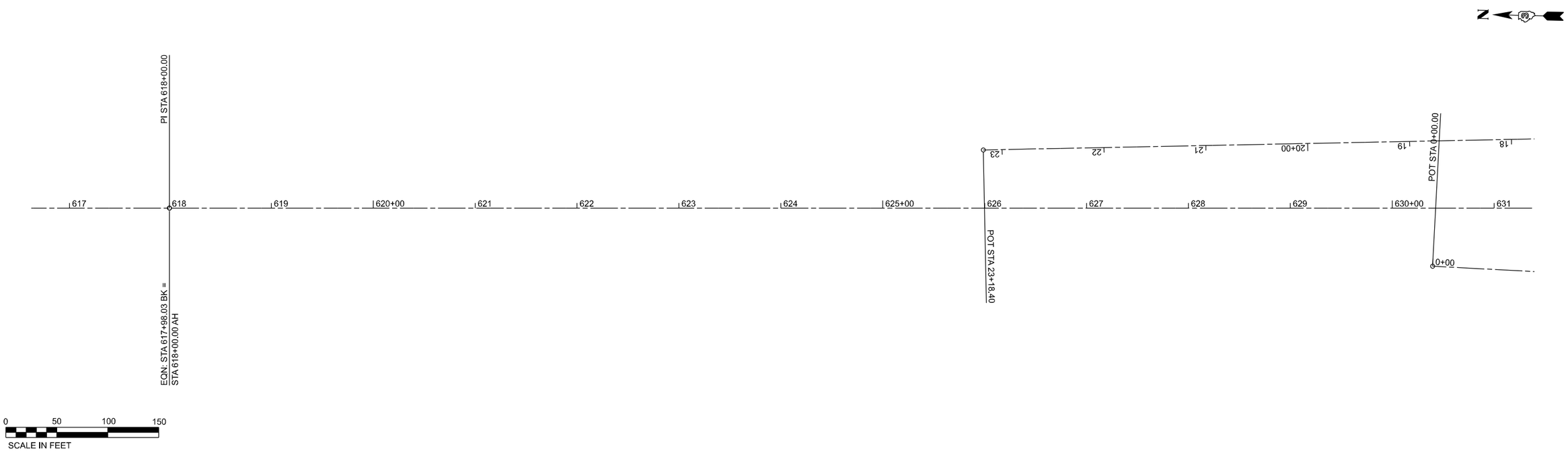


MODEL: Default
FILE NAME: pw://ildot-pw.bentley.com:PWIDOT/Documents/IDOT Offices/District 3/ORD Projects/D398H62/CADData/CADsheets/66H62 Alignment

| | | | |
|---|---|---|---|
| USER NAME = Cody.M.Johnson | DESIGNED - | REVISED - | |
| | DRAWN - | REVISED - | |
| PLOT SCALE = 100,000 ' / in. | CHECKED - | REVISED - | |
| PLOT DATE = 12/15/2023 | DATE - | REVISED - | |

**STATE OF ILLINOIS**
**DEPARTMENT OF TRANSPORTATION**

**ALIGNMENT**

SCALE: | SHEET 6 OF 22 SHEETS | STA. TO STA.

| F.A.I. RTE. | SECTION | COUNTY | TOTAL SHEETS | SHEET NO. |
|---|---|---|---|---|
| 57 | (38-6,38-5)RS,BRR,CLV | IROQUOIS | 213 | 63 |
| | | CONTRACT NO. 66H62 | | |
| | ILLINOIS | FED. AID PROJECT | | |

Long Section Number

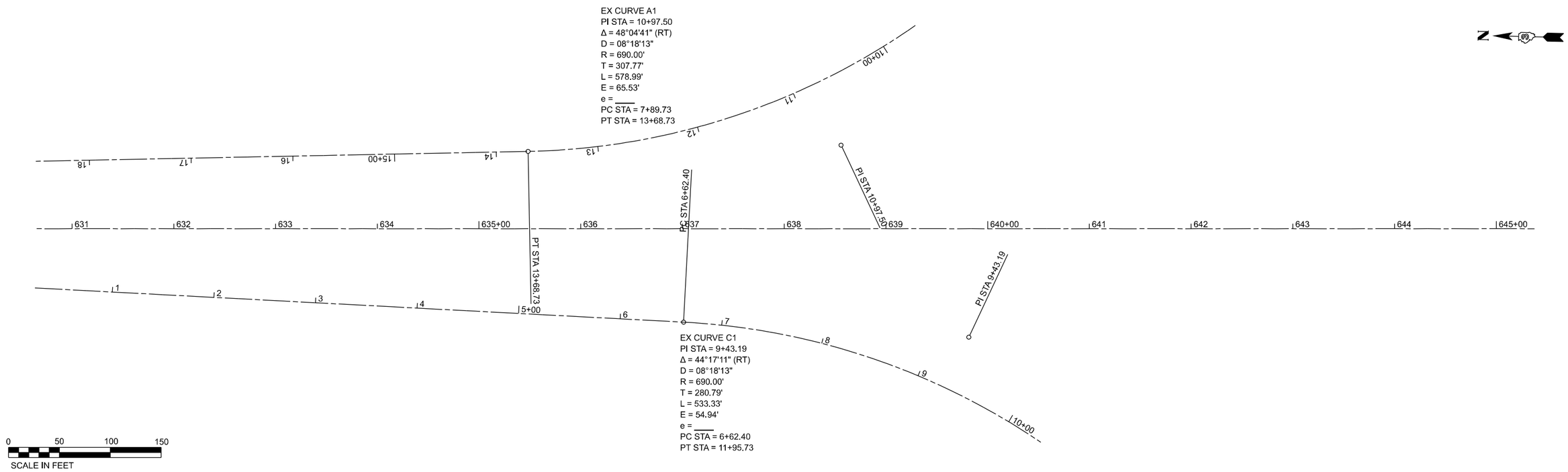


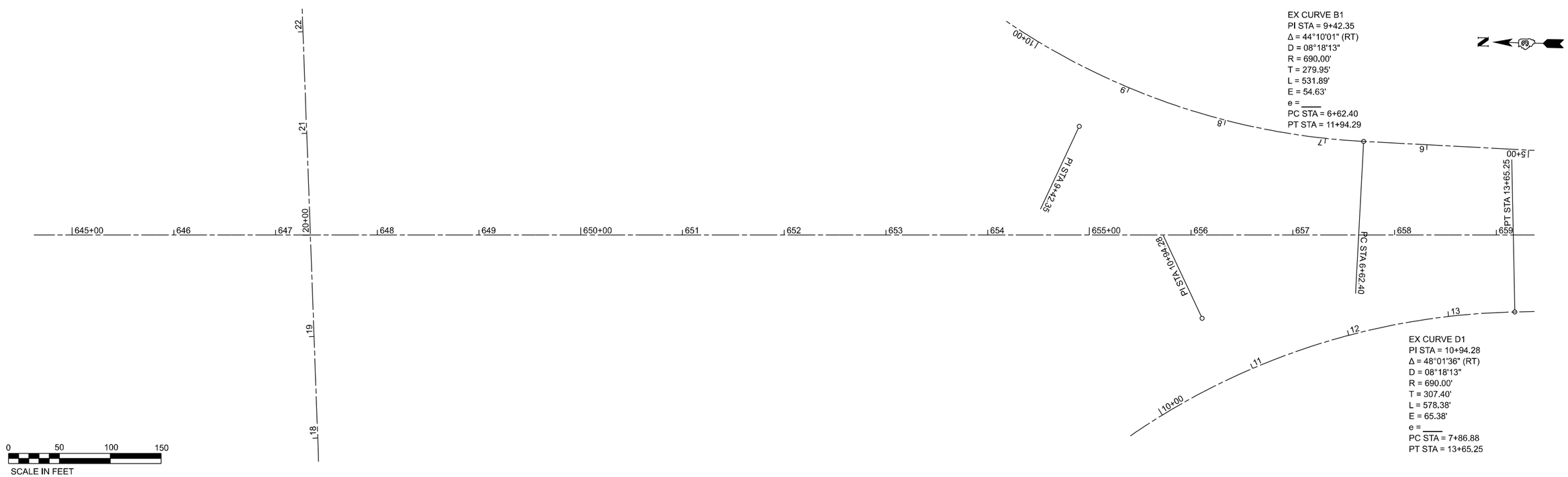


MODEL: Default
FILE NAME: pw://idotpw.bentley.com:PWIDOT/Documents/IDOT Offices/District 3/ORD Projects/D398H62/CADData/CADsheets/66H62 Alignment

| | | | |
|---|---|---|---|
| USER NAME = Cody.M.Johnson | DESIGNED - | REVISED - | |
| | DRAWN - | REVISED - | |
| PLOT SCALE = 100,000 ' / in. | CHECKED - | REVISED - | |
| PLOT DATE = 12/15/2023 | DATE - | REVISED - | |

**STATE OF ILLINOIS**
**DEPARTMENT OF TRANSPORTATION**

**ALIGNMENT**

SCALE: SHEET 7 OF 22 SHEETS STA. TO STA.

| F.A.I. RTE. | SECTION | COUNTY | TOTAL SHEETS | SHEET NO. |
|---|---|---|---|---|
| 57 | (38-6,38-5)RS,BRR,CLV | IROQUOIS | 213 | 64 |
| | | CONTRACT NO. 66H62 | | |
| | ILLINOIS | FED. AID PROJECT | | |

Long Section Number

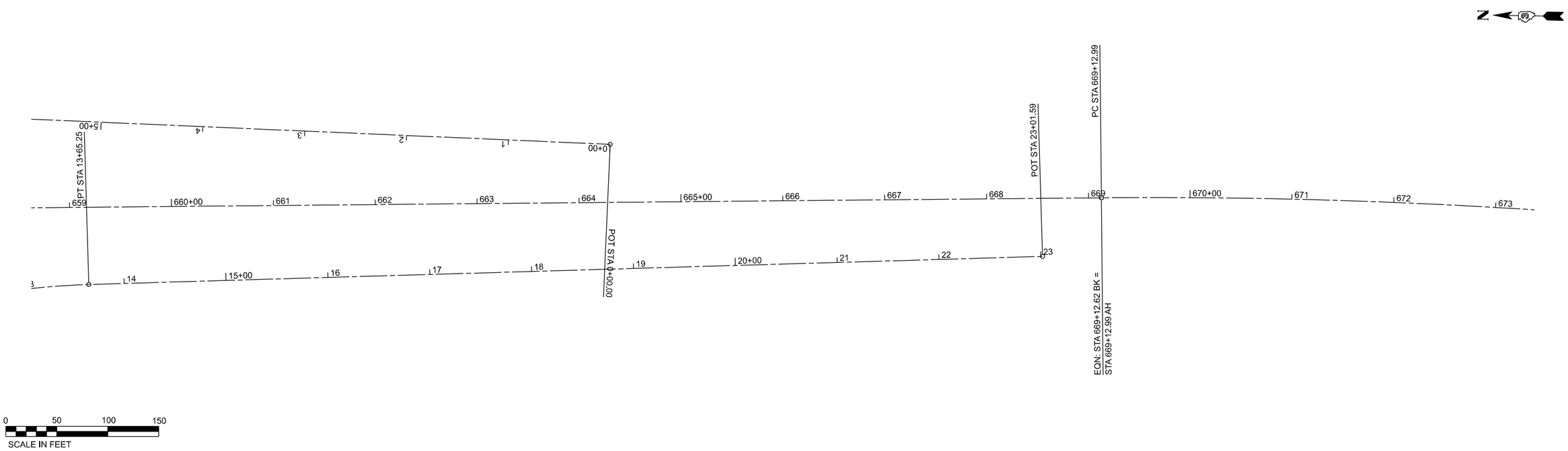


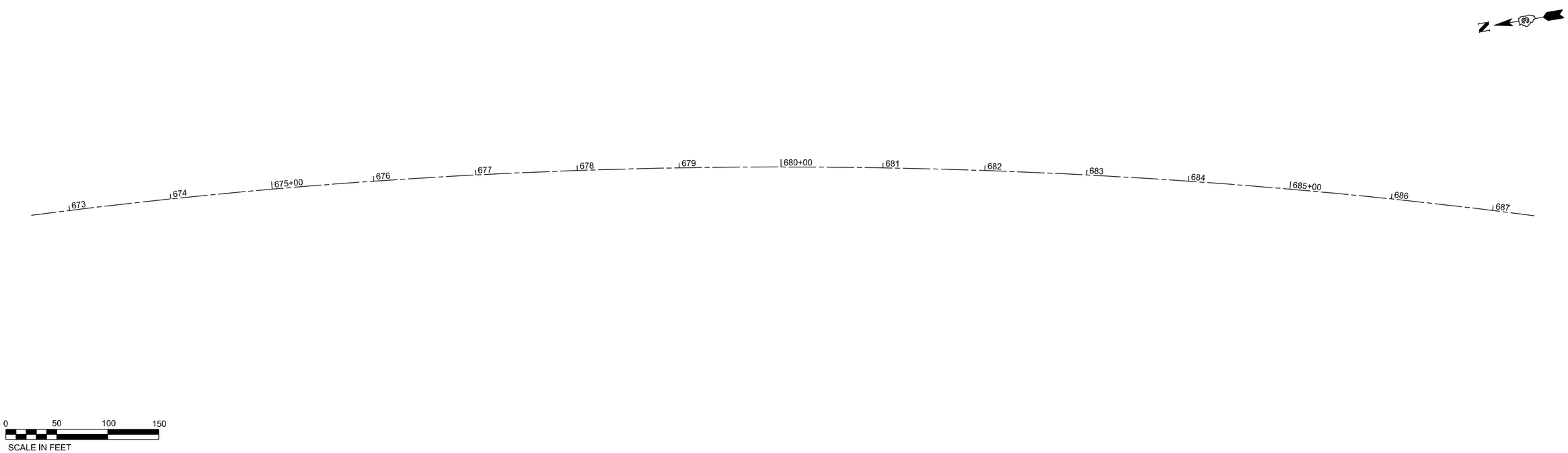


MODEL: Default
FILE NAME: pw://idotcw.bentley.com:PWIDOT/Documents/IDOT Offices/District 3/ORD Projects/D398H62/CADData/CADsheets/66H62 Alignment

| | | | |
|---|---|---|---|
| USER NAME = Cody.M.Johnson | DESIGNED - | REVISED - | |
| | DRAWN - | REVISED - | |
| PLOT SCALE = 100,000 ' / in. | CHECKED - | REVISED - | |
| PLOT DATE = 12/15/2023 | DATE - | REVISED - | |

**STATE OF ILLINOIS**
**DEPARTMENT OF TRANSPORTATION**

**ALIGNMENT**

SCALE: | SHEET 8 OF 22 SHEETS | STA. TO STA.

| F.A.I. RTE. | SECTION | COUNTY | TOTAL SHEETS | SHEET NO. |
|---|---|---|---|---|
| 57 | (38-6,38-5)RS,BRR,CLV | IROQUOIS | 213 | 65 |
| | | CONTRACT NO. 66H62 | | |
| | ILLINOIS | FED. AID PROJECT | | |

Long Section Number

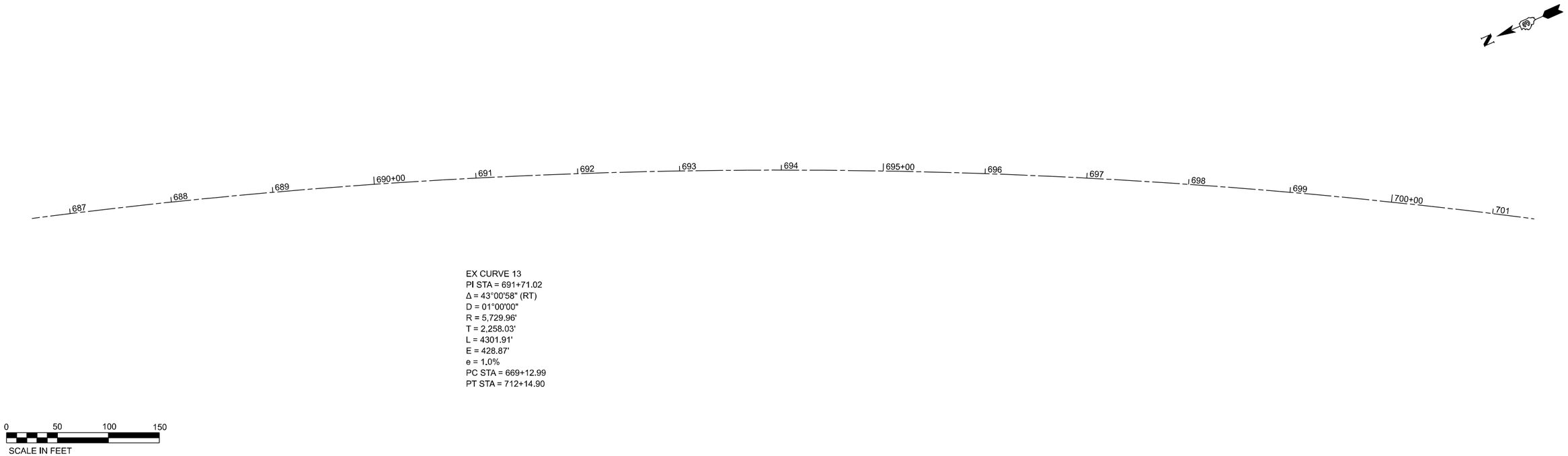


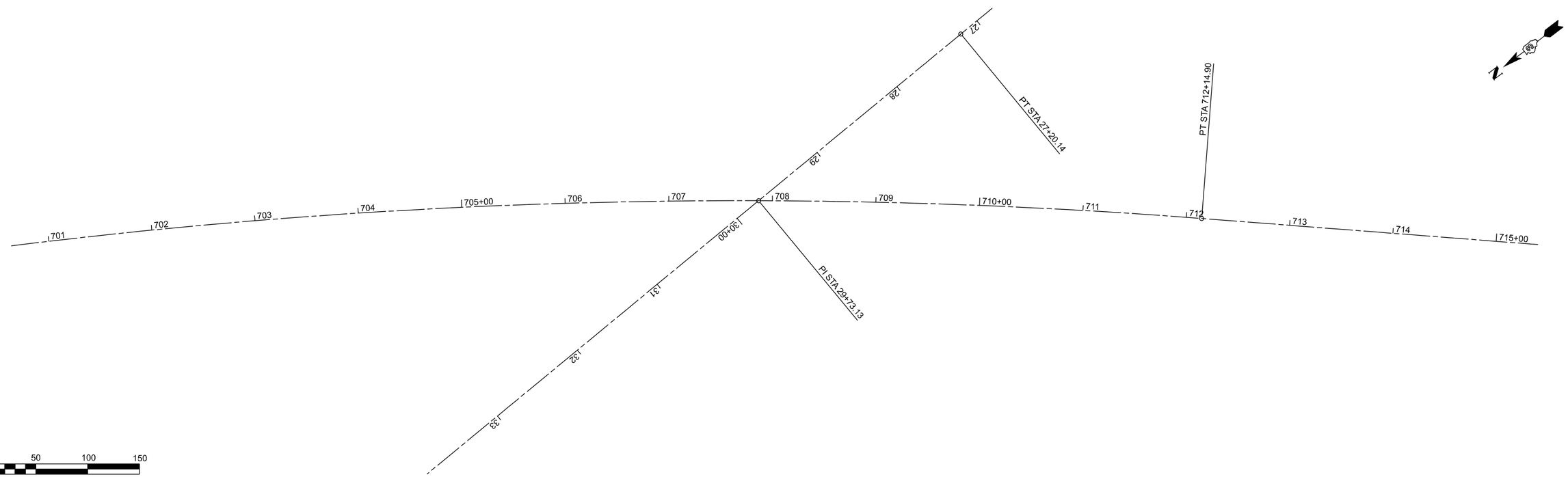


MODEL: Default
FILE NAME: pw://idot-pw.bentley.com:PWIDOT/Documents/IDOT Offices/District 3/ORD Projects/D366H62/CADData/CADsheets/66H62 Alignment

| | | | |
|---|---|---|---|
| USER NAME = Cody.M.Johnson | DESIGNED - | REVISED - | |
| | DRAWN - | REVISED - | |
| PLOT SCALE = 100.000 ' / in. | CHECKED - | REVISED - | |
| PLOT DATE = 12/15/2023 | DATE - | REVISED - | |

**STATE OF ILLINOIS**
**DEPARTMENT OF TRANSPORTATION**

**ALIGNMENT**

SCALE: | SHEET 9 OF 22 SHEETS | STA. | TO STA.

| F.A.I. RTE. | SECTION | COUNTY | TOTAL SHEETS | SHEET NO. |
|---|---|---|---|---|
| 57 | (38-6,38-5)RS,BRR,CLV | IROQUOIS | 213 | 66 |
| | | CONTRACT NO. 66H62 | | |
| | | ILLINOIS | FED. AID PROJECT | |

Long Section Number

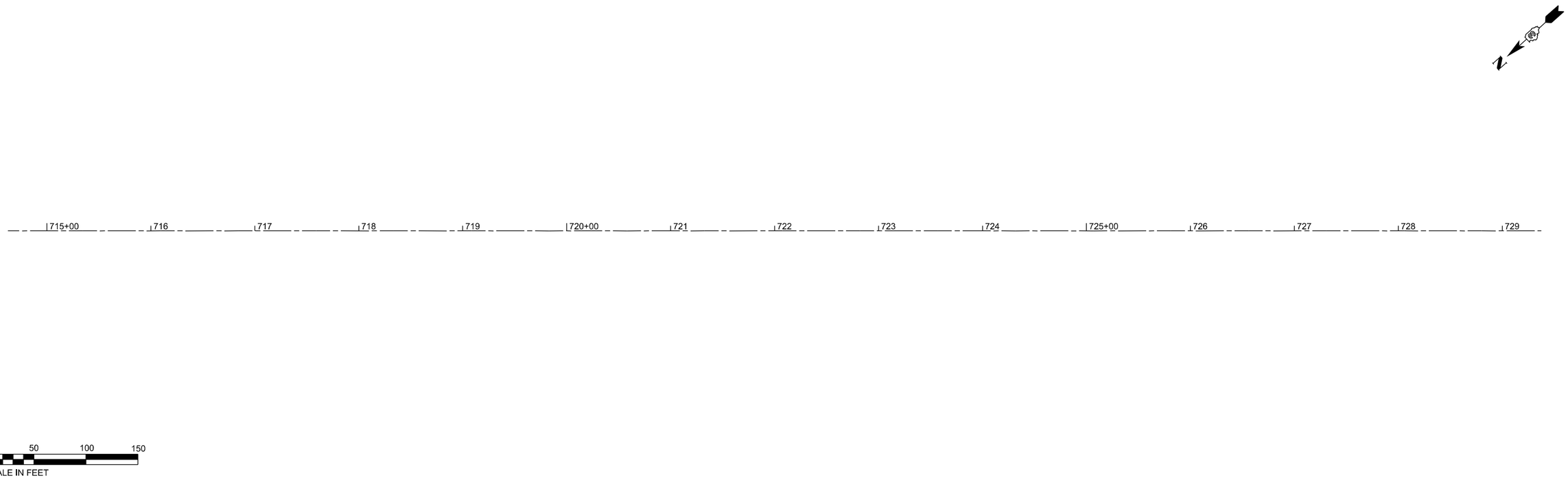


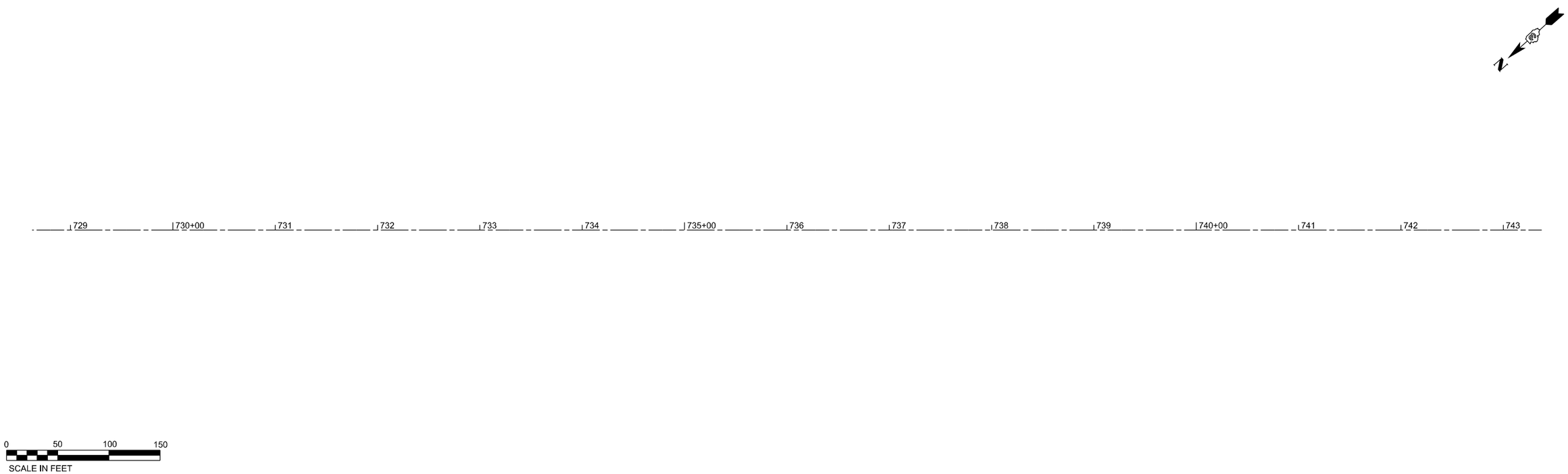


MODEL: Default
FILE NAME: pw://idotpw.bentley.com:PWIDOT/Documents/IDOT Offices/District 3/ORD Projects/D398482/CADData/CADsheets/66H62 Alignment

| | | | |
|---|---|---|---|
| USER NAME = Cody.M.Johnson | DESIGNED - | REVISED - | |
| | DRAWN - | REVISED - | |
| PLOT SCALE = 100,000 ' / in. | CHECKED - | REVISED - | |
| PLOT DATE = 12/15/2023 | DATE - | REVISED - | |

**STATE OF ILLINOIS**
**DEPARTMENT OF TRANSPORTATION**

**ALIGNMENT**

SCALE: SHEET 10 OF 22 SHEETS STA. TO STA.

| F.A.I. RTE. | SECTION | COUNTY | TOTAL SHEETS | SHEET NO. |
|---|---|---|---|---|
| 57 | (38-6,38-5)RS,BRR,CLV | IROQUOIS | 213 | 67 |
| | | CONTRACT NO. 66H62 | | |
| | ILLINOIS | FED. AID PROJECT | | |

Long Section Number

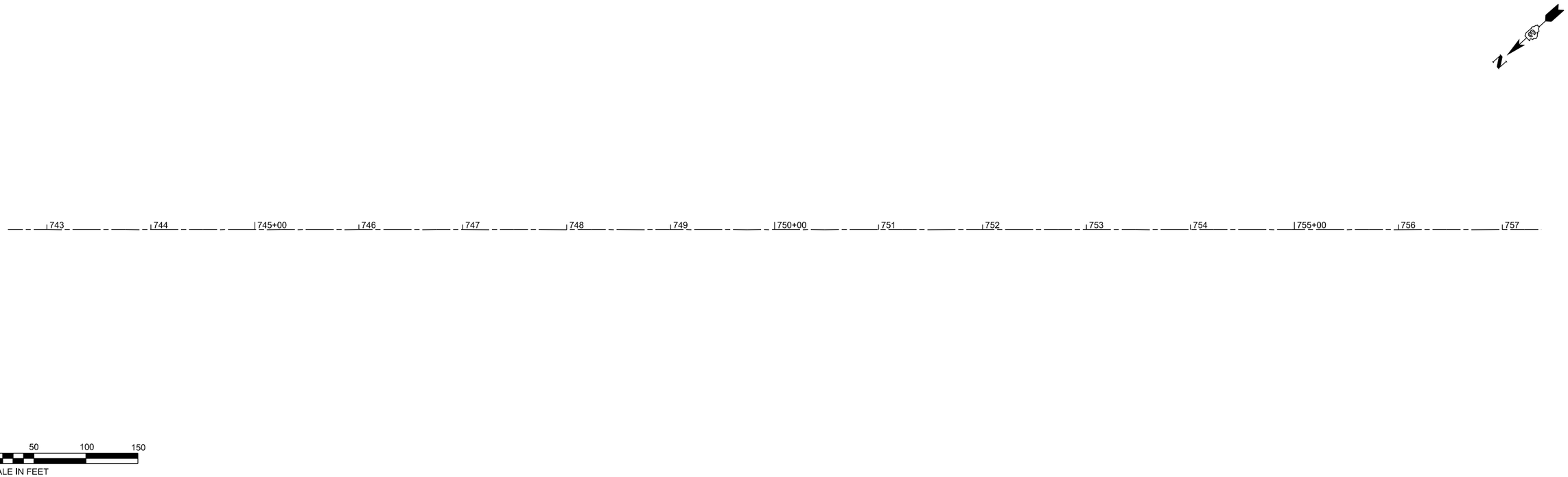

MODEL: Default
FILE NAME: pw://idot-pw.bentley.com:PWIDOT/Documents/IDOT Offices/District 3/ORD Projects/D366H62/CADData/CADsheets/66H62 Alignment

| | | | |
|---|---|---|---|
| USER NAME = Cody.M.Johnson | DESIGNED - | REVISED - | |
| | DRAWN - | REVISED - | |
| PLOT SCALE = 100,000 ' / in. | CHECKED - | REVISED - | |
| PLOT DATE = 12/15/2023 | DATE - | REVISED - | |

**STATE OF ILLINOIS**
**DEPARTMENT OF TRANSPORTATION**

**ALIGNMENT**

SCALE: | SHEET 11 OF 22 SHEETS | STA. | TO STA.

| F.A.I. RTE. | SECTION | COUNTY | TOTAL SHEETS | SHEET NO. |
|---|---|---|---|---|
| 57 | (38-6,38-5)RS,BRR,CLV | IROQUOIS | 213 | 68 |
| | | CONTRACT NO. 66H62 | | |
| | | ILLINOIS | FED. AID PROJECT | |

Long Section Number

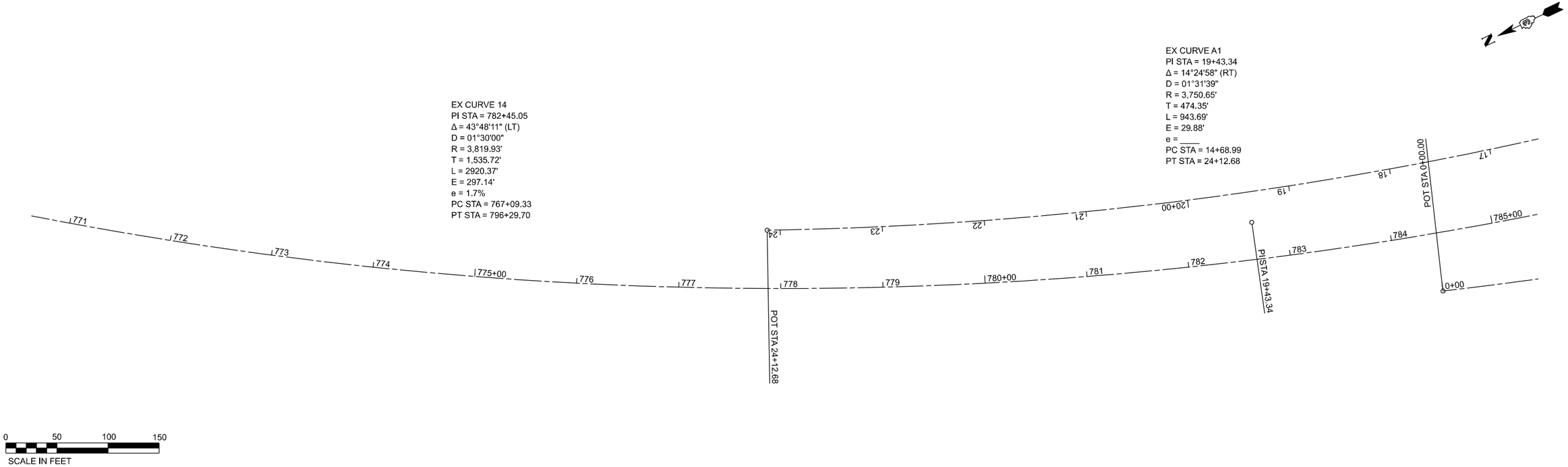


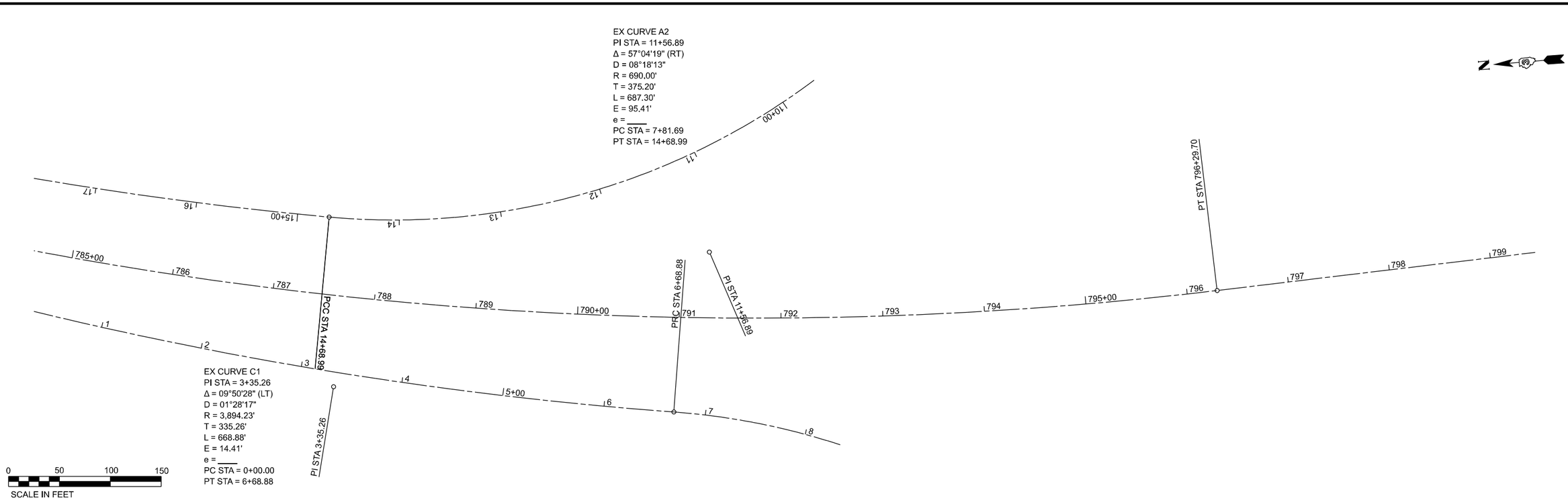


MODEL: Default
FILE NAME: pw://ildot-pw.bentley.com:PWIDOT/Documents/IDOT Offices/District 3/ORD Projects/D398H62/CADData/CADsheets/69H62 Alignment

| | | | |
|---|---|---|---|
| USER NAME = Cody.M.Johnson | DESIGNED - | REVISED - | |
| | DRAWN - | REVISED - | |
| PLOT SCALE = 100.000 ' / in. | CHECKED - | REVISED - | |
| PLOT DATE = 12/15/2023 | DATE - | REVISED - | |

**STATE OF ILLINOIS**
**DEPARTMENT OF TRANSPORTATION**

**ALIGNMENT**

SCALE: | SHEET 12 OF 22 SHEETS | STA. | TO STA.

| F.A.I. RTE. | SECTION | COUNTY | TOTAL SHEETS | SHEET NO. |
|---|---|---|---|---|
| 57 | (38-6,38-5)RS,BRR,CLV | IROQUOIS | 213 | 69 |
| | | CONTRACT NO. 66H62 | | |
| | ILLINOIS | FED. AID PROJECT | | |

Long Section Number

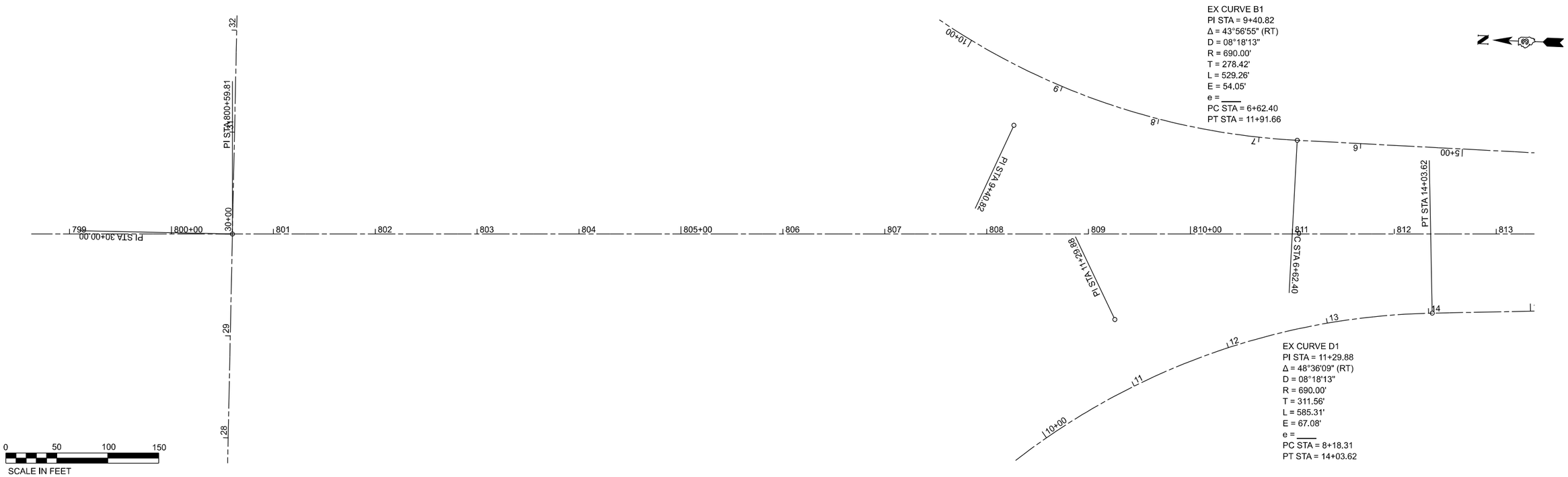


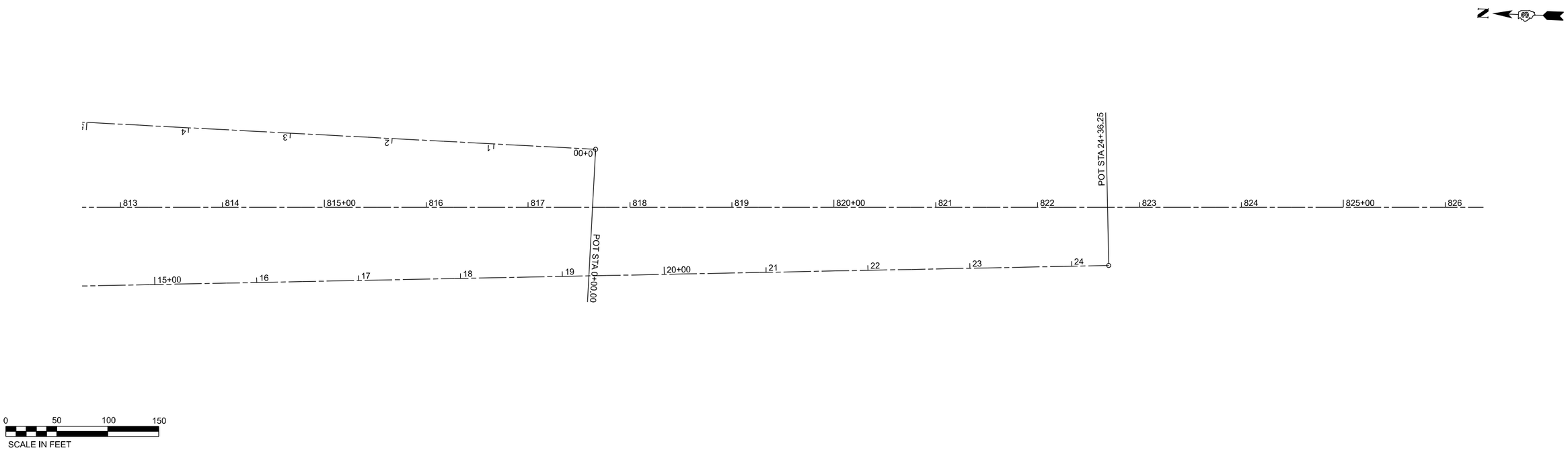


MODEL: Default
FILE NAME: pw://ildot-pw.bentley.com:PWIDOT/Documents/IDOT Offices/District 3/ORD Projects/D398482/CADData/CADsheets/66H62 Alignment

| | | | |
|---|---|---|---|
| USER NAME = Cody.M.Johnson | DESIGNED - | REVISED - | |
| | DRAWN - | REVISED - | |
| PLOT SCALE = 100,000 ' / in. | CHECKED - | REVISED - | |
| PLOT DATE = 12/15/2023 | DATE - | REVISED - | |

**STATE OF ILLINOIS**
**DEPARTMENT OF TRANSPORTATION**

**ALIGNMENT**

SCALE: SHEET 13 OF 22 SHEETS STA. TO STA.

| F.A.I. RTE. | SECTION | COUNTY | TOTAL SHEETS | SHEET NO. |
|---|---|---|---|---|
| 57 | (38-6,38-5)RS,BRR,CLV | IROQUOIS | 213 | 70 |
| | | CONTRACT NO. 66H62 | | |
| | ILLINOIS | FED. AID PROJECT | | |

Long Section Number

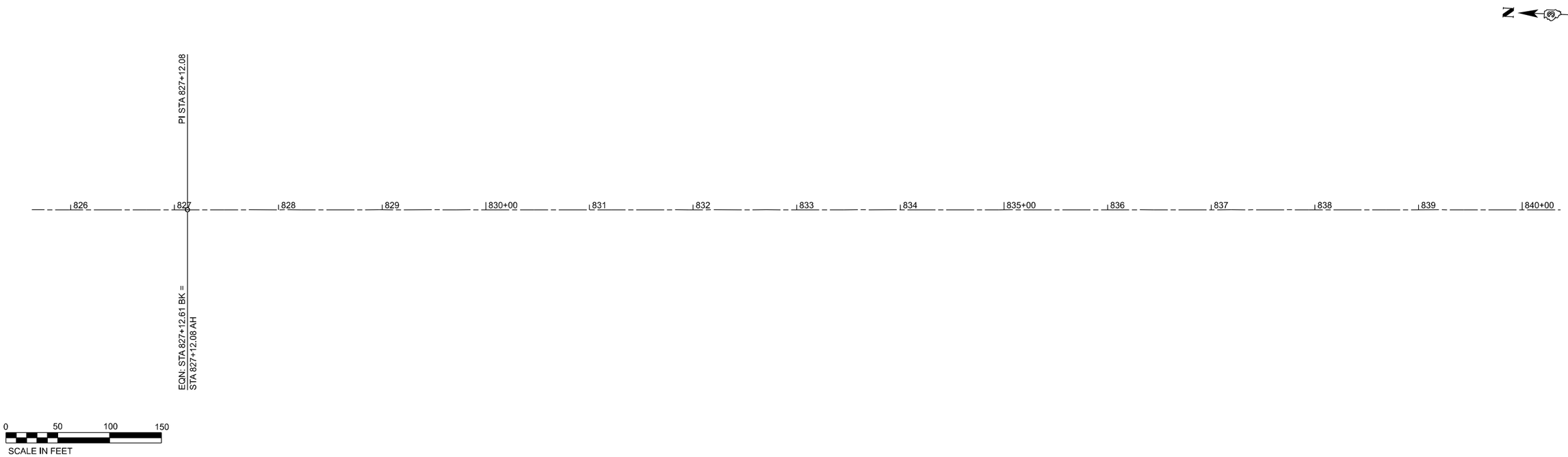


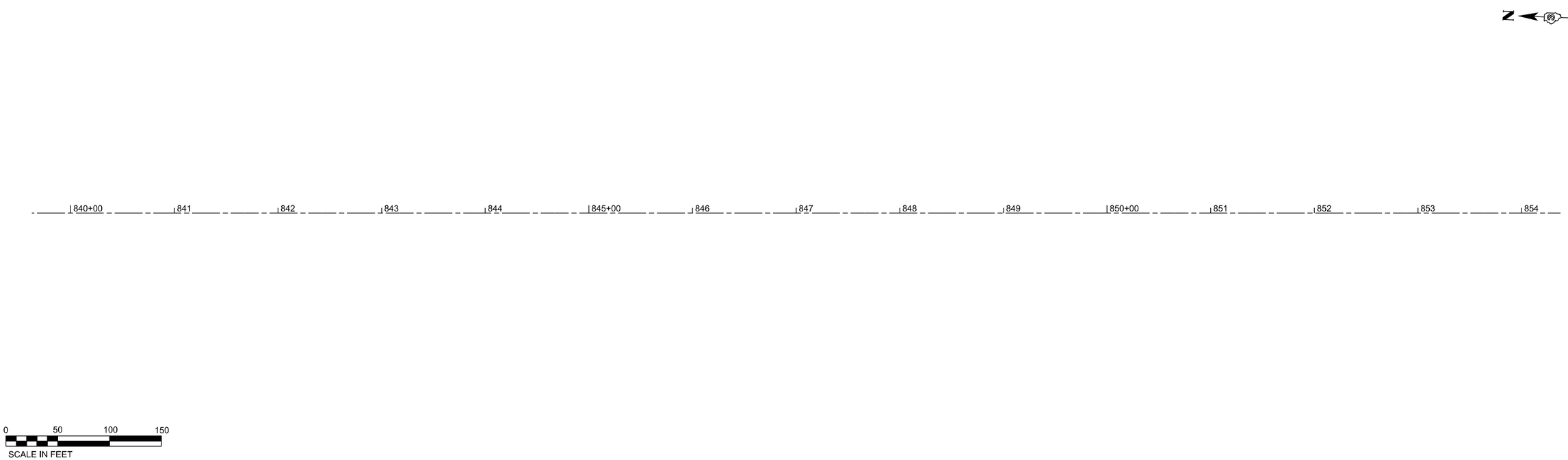


MODEL: Default
FILE NAME: pw://idot-pw.bentley.com:PWIDOT/Documents/IDOT Offices/District 3/ORD Projects/D366H62/CADData/CADsheets/66H62 Alignment

| | | | |
|---|---|---|---|
| USER NAME = Cody.M.Johnson | DESIGNED - | REVISED - | STATE OF ILLINOIS DEPARTMENT OF TRANSPORTATION |
| | DRAWN - | REVISED - | |
| PLOT SCALE = 100,000 ' / in. | CHECKED - | REVISED - | |
| PLOT DATE = 12/15/2023 | DATE - | REVISED - | |

**ALIGNMENT**

SCALE: | SHEET 14 OF 22 SHEETS | STA. | TO STA.

| F.A.I. RTE. | SECTION | COUNTY | TOTAL SHEETS | SHEET NO. |
|---|---|---|---|---|
| 57 | (38-6,38-5)RS,BRR,CLV | IROQUOIS | 213 | 71 |
| | | CONTRACT NO. 66H62 | | |
| | | ILLINOIS | FED. AID PROJECT | |

Long Section Number

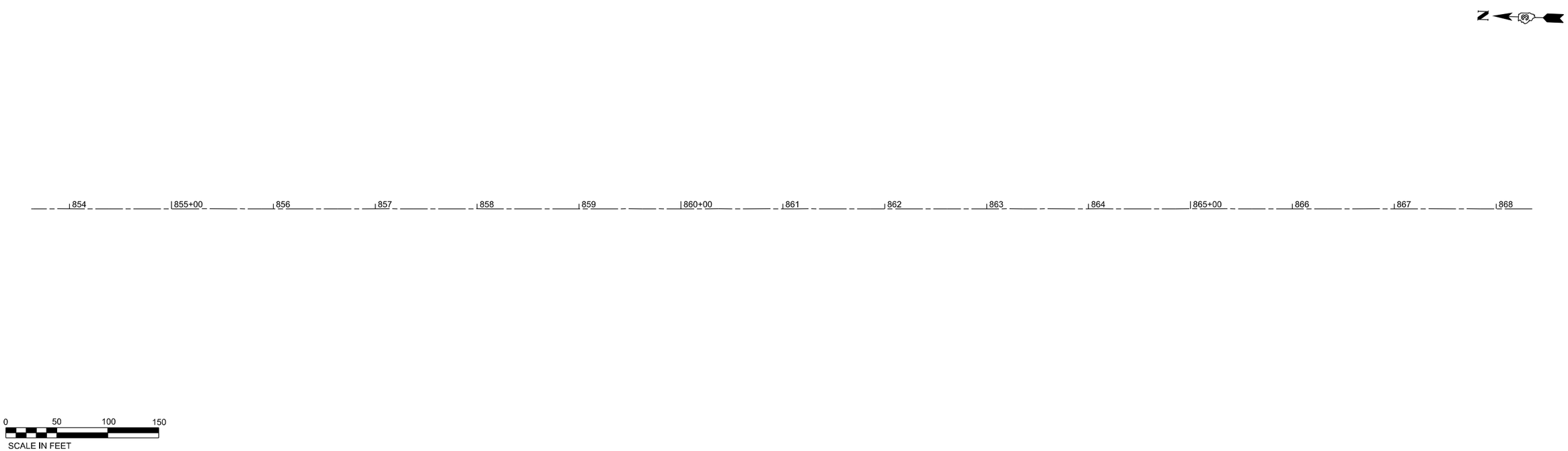


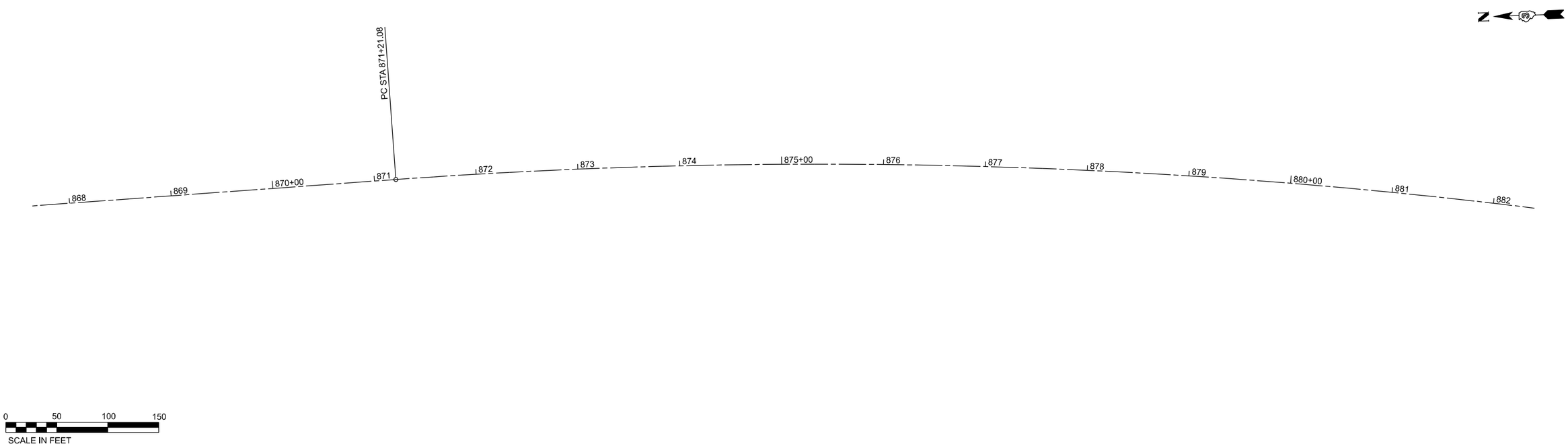


MODEL: Default
FILE NAME: pw://idotpw.bentley.com:PWIDOT/Documents/IDOT Offices/District 3/ORD Projects/D398H62/CADData/CADsheets/66H62 Alignment

| | | | |
|---|---|---|---|
| USER NAME = Cody.M.Johnson | DESIGNED - | REVISED - | |
| | DRAWN - | REVISED - | |
| PLOT SCALE = 100,000 ' / in. | CHECKED - | REVISED - | |
| PLOT DATE = 12/15/2023 | DATE - | REVISED - | |

**STATE OF ILLINOIS**
**DEPARTMENT OF TRANSPORTATION**

**ALIGNMENT**

SCALE: | SHEET 15 OF 22 SHEETS | STA. | TO STA.

| F.A.I. RTE. | SECTION | COUNTY | TOTAL SHEETS | SHEET NO. |
|---|---|---|---|---|
| 57 | (38-6,38-5)RS,BRR,CLV | IROQUOIS | 213 | 72 |
| | | CONTRACT NO. 66H62 | | |
| | ILLINOIS | FED. AID PROJECT | | |

Long Section Number

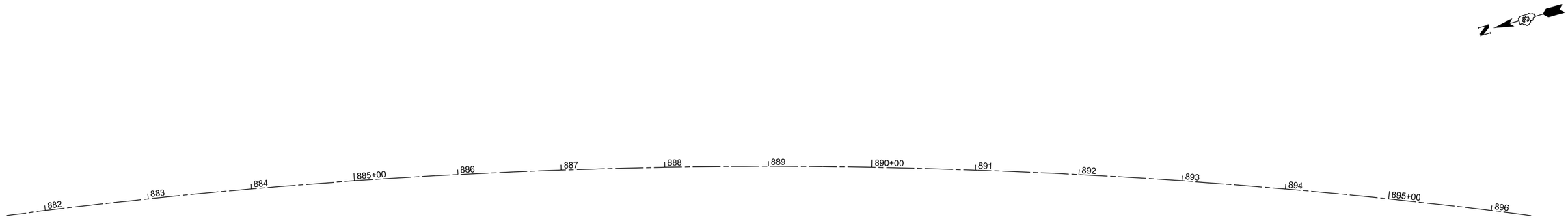


EX CURVE 15
PI STA = 889+11.03
Δ = 34°41'30" (RT)
D = 00°59'59"
R = 5,730.70'
T = 1,789.95'
L = 3469.86'
E = 273.04'
e = 2.8%
PC STA = 871+21.08
PT STA = 905+90.94

0 50 100 150
SCALE IN FEET

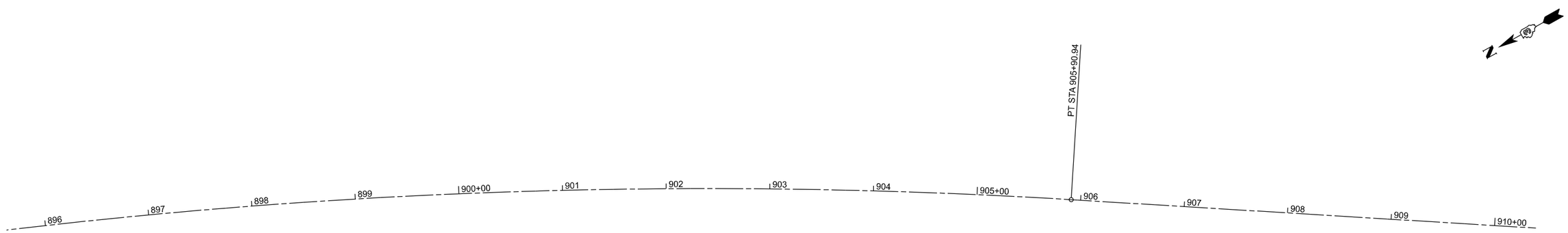


0 50 100 150
SCALE IN FEET

MODEL: Default
FILE NAME: pw://idotpw.bentley.com:PWIDOT/Documents/IDOT Offices/District 3/ORD Projects/D398H62/CADData/CADsheets/66H62 Alignment

| | | | |
|---|---|---|---|
| USER NAME = Cody.M.Johnson | DESIGNED - | REVISED - | |
| | DRAWN - | REVISED - | |
| PLOT SCALE = 100,000 ' / in. | CHECKED - | REVISED - | |
| PLOT DATE = 12/15/2023 | DATE - | REVISED - | |

**STATE OF ILLINOIS**
**DEPARTMENT OF TRANSPORTATION**

**ALIGNMENT**

SCALE: SHEET 16 OF 22 SHEETS STA. TO STA.

| F.A.I. RTE. | SECTION | COUNTY | TOTAL SHEETS | SHEET NO. |
|---|---|---|---|---|
| 57 | (38-6,38-5)RS,BRR,CLV | IROQUOIS | 213 | 73 |
| | | CONTRACT NO. 66H62 | | |
| | ILLINOIS | FED. AID PROJECT | | |

Long Section Number

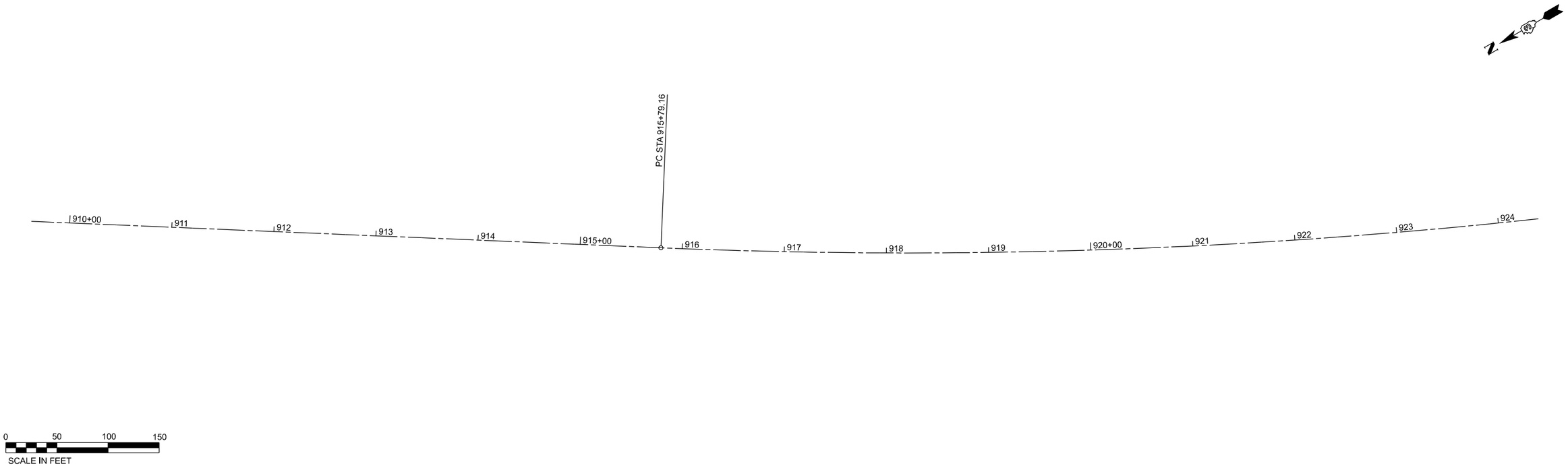


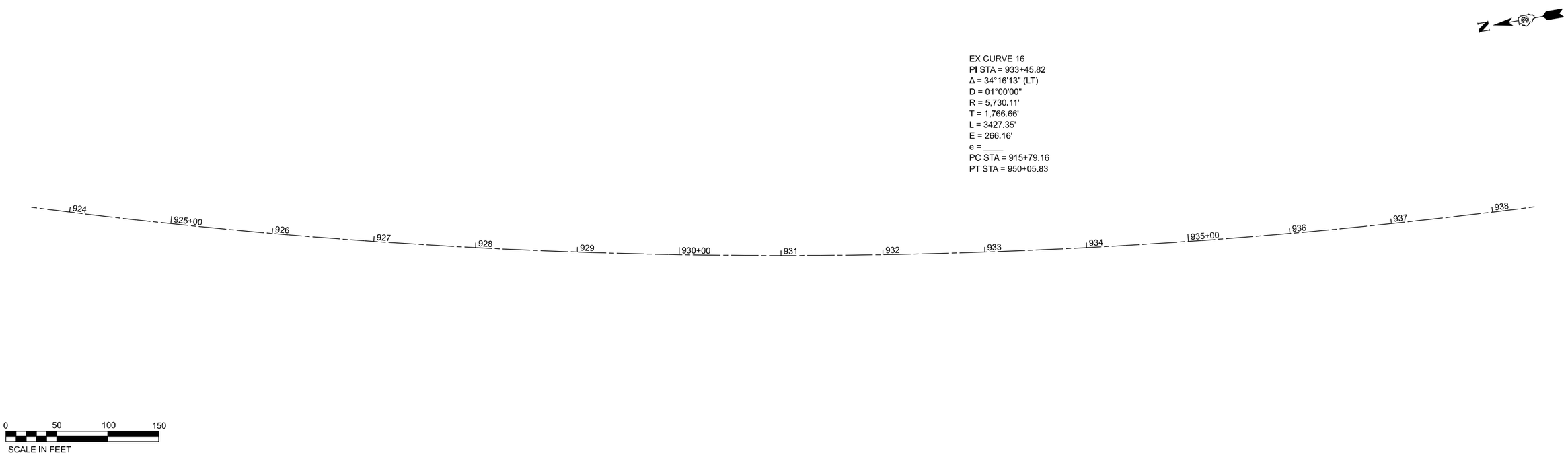


MODEL: Default
FILE NAME: pw://ildot-pw.bentley.com:PWIDOT/Documents/IDOT Offices/District 3/ORD Projects/D398482/CADData/CADsheets/66H62 Alignment

| | | | |
|---|---|---|---|
| USER NAME = Cody.M.Johnson | DESIGNED - | REVISED - | |
| | DRAWN - | REVISED - | |
| PLOT SCALE = 100,000 ' / in. | CHECKED - | REVISED - | |
| PLOT DATE = 12/15/2023 | DATE - | REVISED - | |

**STATE OF ILLINOIS**
**DEPARTMENT OF TRANSPORTATION**

**ALIGNMENT**

SCALE: SHEET 17 OF 22 SHEETS STA. TO STA.

| F.A.I. RTE. | SECTION | COUNTY | TOTAL SHEETS | SHEET NO. |
|---|---|---|---|---|
| 57 | (38-6,38-5)RS,BRR,CLV | IROQUOIS | 213 | 74 |
| | | CONTRACT NO. 66H62 | | |
| | ILLINOIS | FED. AID PROJECT | | |

Long Section Number

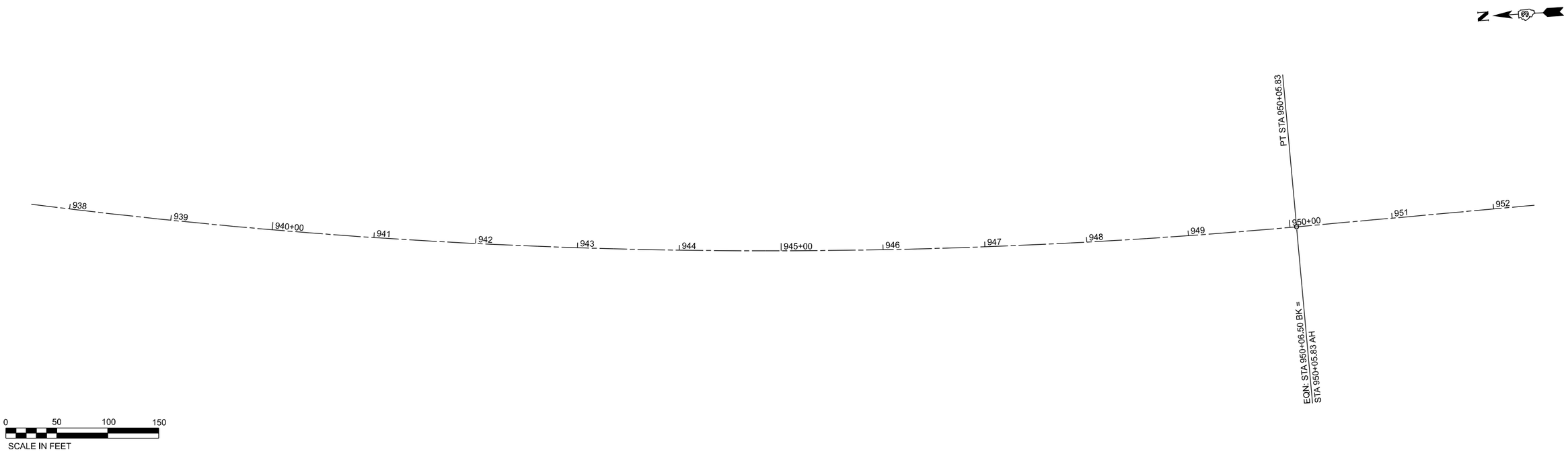


MODEL: Default
FILE NAME: pw://idotpw.bentley.com:PWIDOT/Documents/IDOT Offices/District 3/ORD Projects/D398482/CADData/CADsheets/698482 Alignment

| | | | |
|---|---|---|---|
| USER NAME = Cody.M.Johnson | DESIGNED - | REVISED - | |
| | DRAWN - | REVISED - | |
| PLOT SCALE = 100,000 ' / in. | CHECKED - | REVISED - | |
| PLOT DATE = 12/15/2023 | DATE - | REVISED - | |

**STATE OF ILLINOIS**
**DEPARTMENT OF TRANSPORTATION**

**ALIGNMENT**

SCALE: | SHEET 18 OF 22 SHEETS | STA. TO STA.

| F.A.I RTE. | SECTION | COUNTY | TOTAL SHEETS | SHEET NO. |
|---|---|---|---|---|
| 57 | (38-6,38-5)RS,BRR,CLV | IROQUOIS | 213 | 75 |
| | | CONTRACT NO. 66H62 | | |
| | ILLINOIS | FED. AID PROJECT | | |

Long Section Number

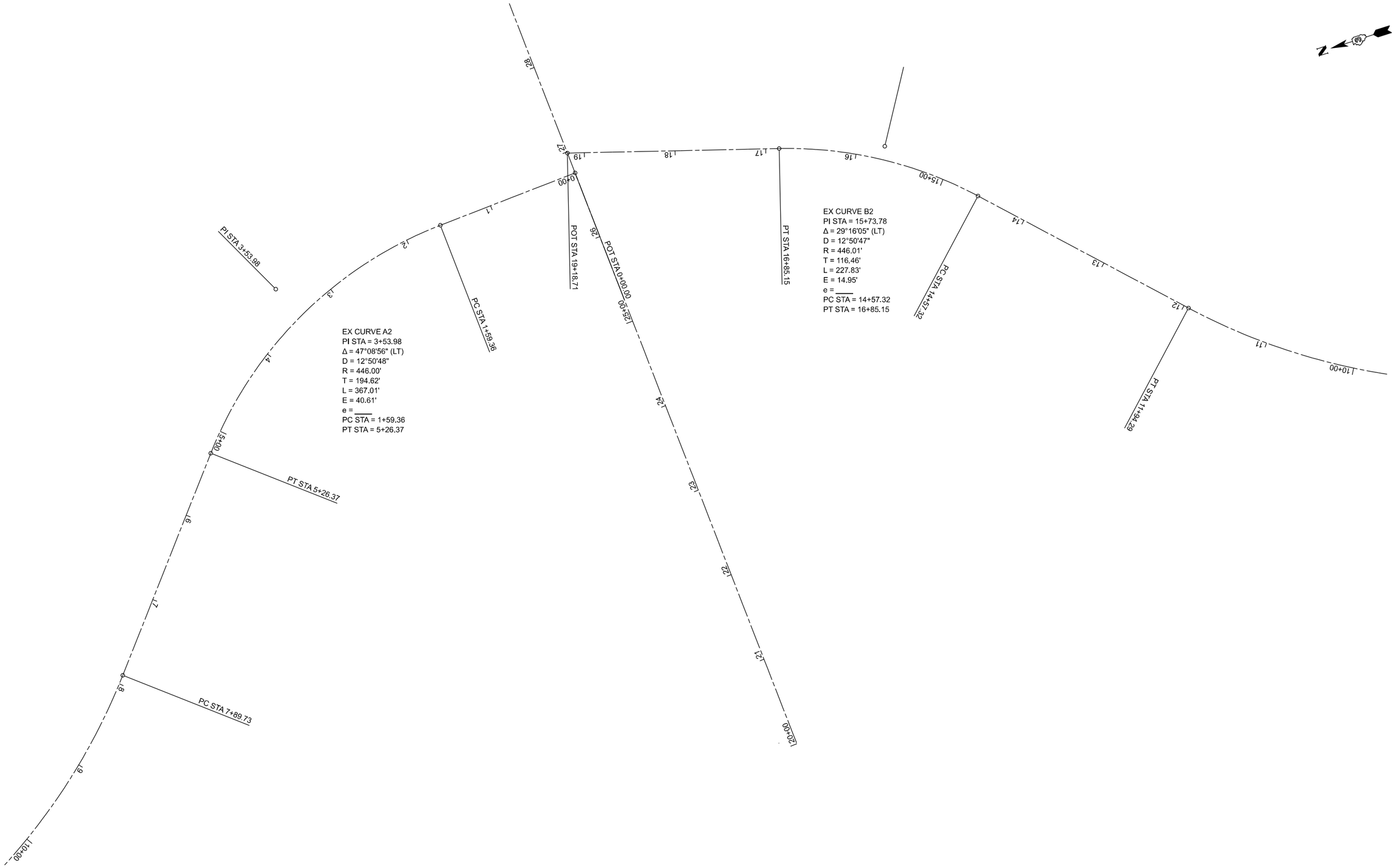


MODEL: Default
FILE NAME: pw://idot-pw.bentley.com:PWIDOT/Documents/IDOT Offices/District 3 ORD Projects/D386H62/CADData/CADsheets/66H62 Alignment

| | | | |
|---|---|---|---|
| USER NAME = Cody.M.Johnson | DESIGNED - | REVISED - | |
| | DRAWN - | REVISED - | |
| PLOT SCALE = 100,000 ' / in. | CHECKED - | REVISED - | |
| PLOT DATE = 12/15/2023 | DATE - | REVISED - | |

**STATE OF ILLINOIS**
**DEPARTMENT OF TRANSPORTATION**

**ALIGNMENT**
**US-24 INTERCHANGE**

SCALE: | SHEET 19 OF 22 SHEETS | STA. | TO STA.

| F.A.I RTE. | SECTION | COUNTY | TOTAL SHEETS | SHEET NO. |
|---|---|---|---|---|
| 57 | (38-6,38-5)RS,BRR,CLV | IROQUOIS | 213 | 76 |
| | | CONTRACT NO. 66H62 | | |
| | ILLINOIS | FED. AID PROJECT | | |

Long Section Number

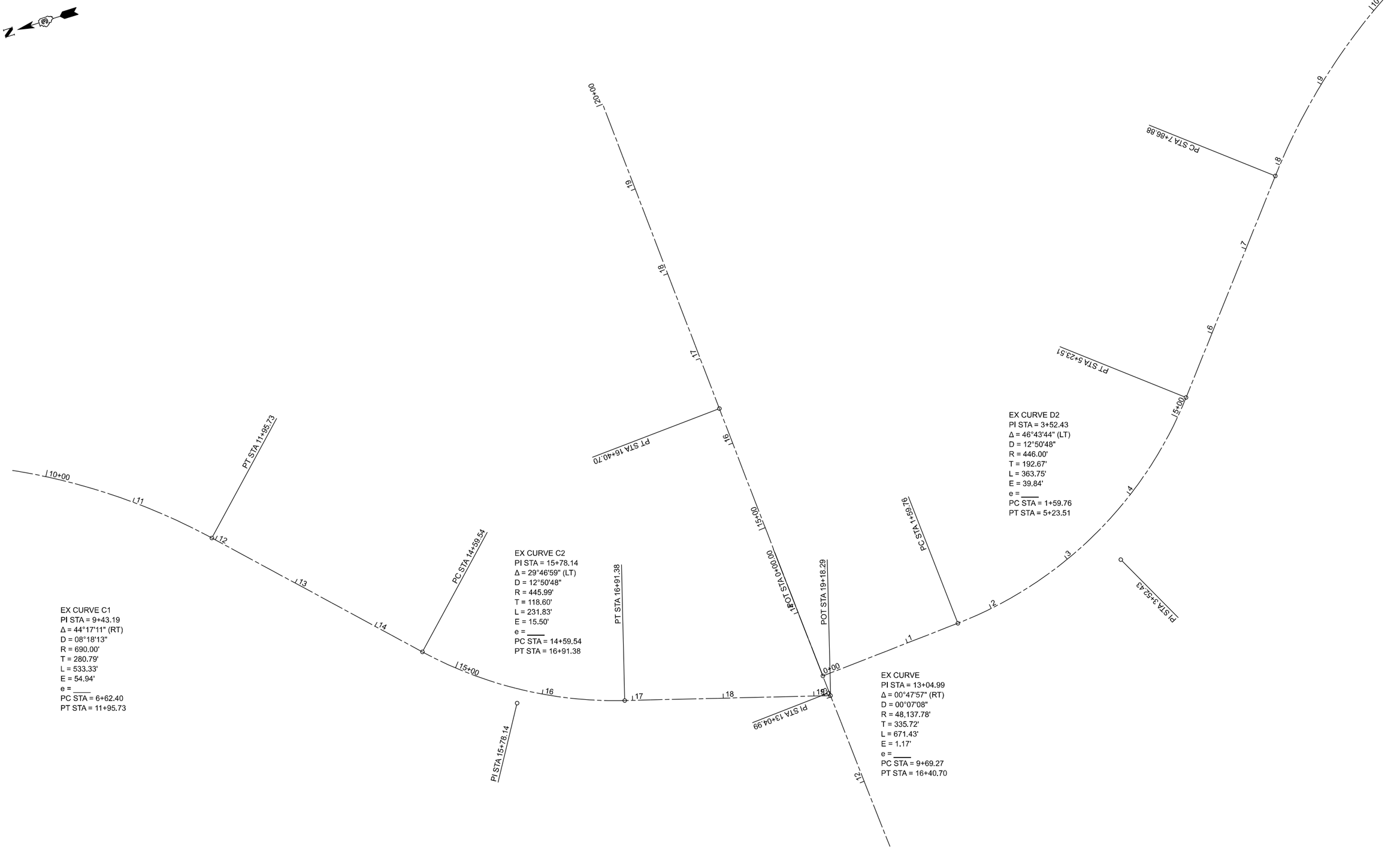


MODEL: Default
FILE NAME: pw://idot-pw.bentley.com:PWIDOT/Documents/IDOT Offices/District 3/ORD Projects/D366H62/CADData/CADsheets/66H62 Alignment

| | | | |
|---|---|---|---|
| USER NAME = Cody.M.Johnson | DESIGNED - | REVISED - | |
| | DRAWN - | REVISED - | |
| PLOT SCALE = 100.000 ' / in. | CHECKED - | REVISED - | |
| PLOT DATE = 12/15/2023 | DATE - | REVISED - | |

**STATE OF ILLINOIS**
**DEPARTMENT OF TRANSPORTATION**

**ALIGNMENT**
**US-24 INTERCHANGE**

SCALE: | SHEET 20 OF 22 SHEETS | STA. | TO STA.

| F.A.I RTE. | SECTION | COUNTY | TOTAL SHEETS | SHEET NO. |
|---|---|---|---|---|
| 57 | (38-6,38-5)RS,BRR,CLV | IROQUOIS | 213 | 77 |
| | | CONTRACT NO. 66H62 | | |
| | | ILLINOIS FED. AID PROJECT | | |

Long Section Number

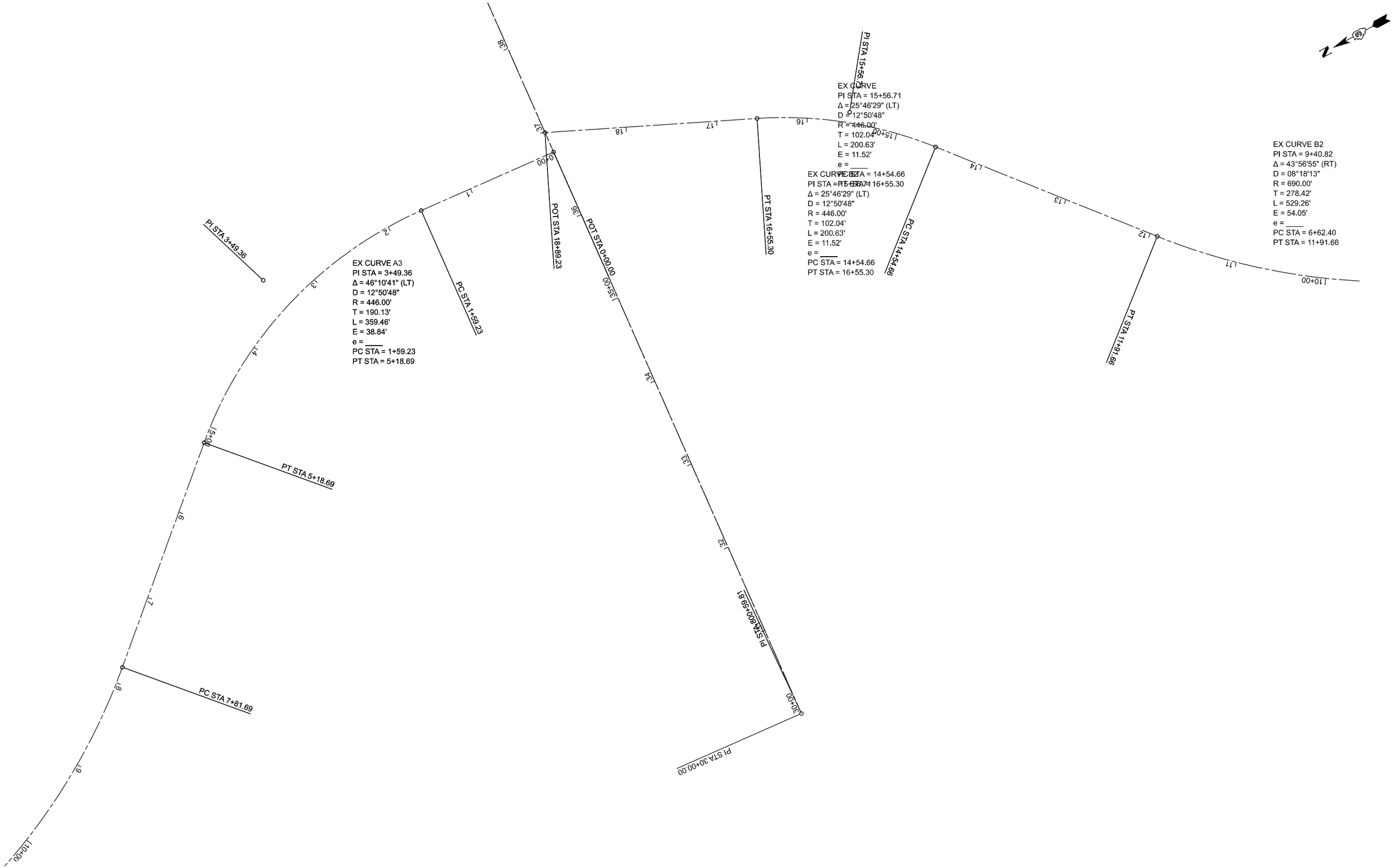


MODEL: Default
FILE NAME: pw://idotpw.bentley.com:PWIDOT/Documents/IDOT Offices/District 3/ORD Projects/66H62/CADData/CADsheets/66H62 Alignment

| | | | |
|---|---|---|---|
| USER NAME = Cody.M.Johnson | DESIGNED - | REVISED - | |
| | DRAWN - | REVISED - | |
| PLOT SCALE = 100,000 ' / in. | CHECKED - | REVISED - | |
| PLOT DATE = 12/15/2023 | DATE - | REVISED - | |

**STATE OF ILLINOIS**
**DEPARTMENT OF TRANSPORTATION**

**ALIGNMENT**
**IL-54 INTERCHANGE**

SCALE: | SHEET 21 OF 22 SHEETS | STA. | TO STA.

| F.A.I RTE. | SECTION | COUNTY | TOTAL SHEETS | SHEET NO. |
|---|---|---|---|---|
| 57 | (38-6,38-5)RS,BRR,CLV | IROQUOIS | 213 | 78 |
| | | CONTRACT NO. 66H62 | | |
| | ILLINOIS | FED. AID PROJECT | | |

Long Section Number

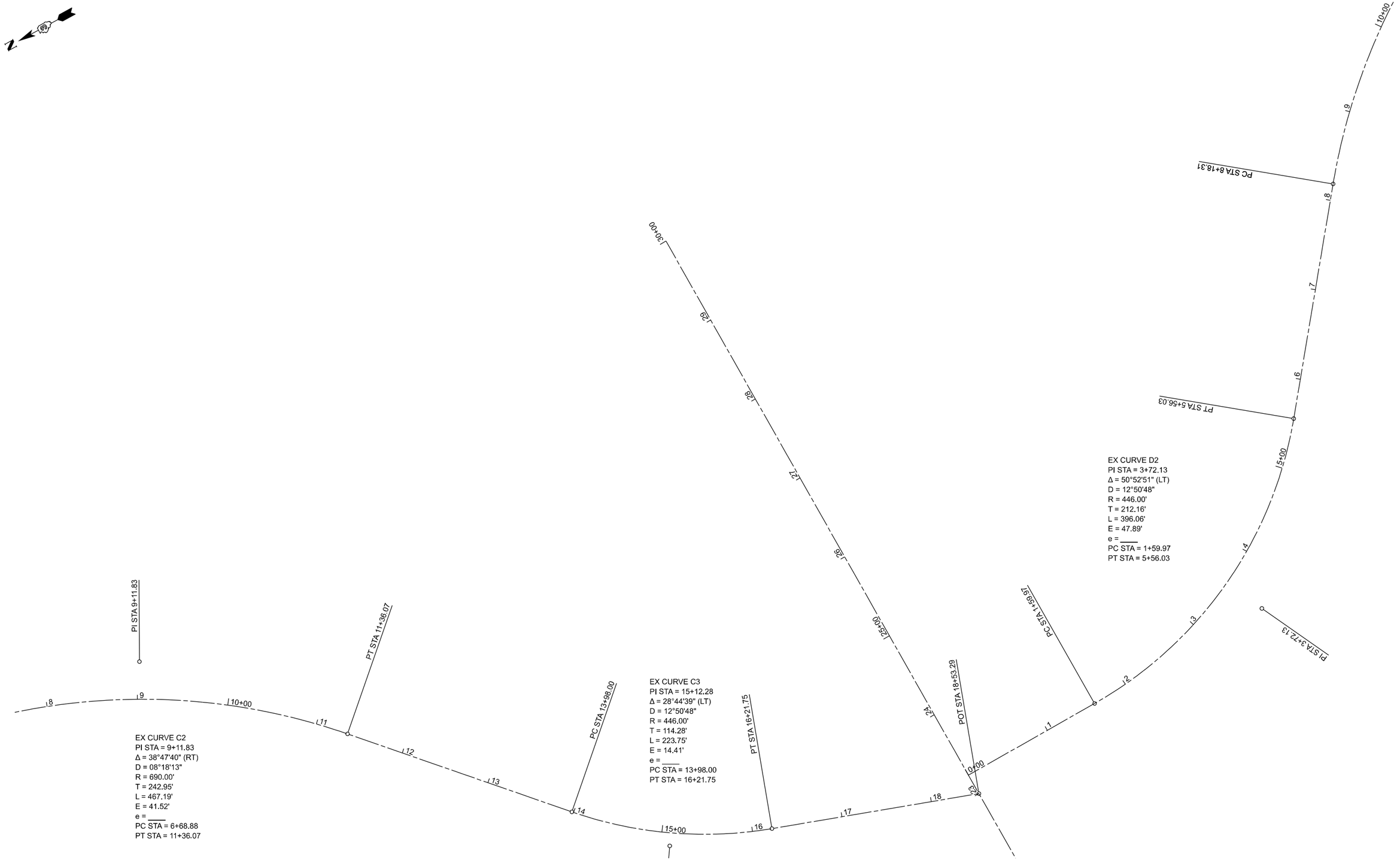


MODEL: Default
FILE NAME: pw://idotpw.bentley.com:PWIDOT/Documents/IDOT Offices/District 3/ORD Projects/D398482/CADData/CADsheets/66H62 Alignment

| | | | |
|---|---|---|---|
| USER NAME = Cody.M.Johnson | DESIGNED - | REVISED - | |
| | DRAWN - | REVISED - | |
| PLOT SCALE = 100,000 ' / in. | CHECKED - | REVISED - | |
| PLOT DATE = 12/15/2023 | DATE - | REVISED - | |

**STATE OF ILLINOIS**
**DEPARTMENT OF TRANSPORTATION**

**ALIGNMENT**
**IL-54 INTERCHANGE**

SCALE: | SHEET 22 OF 22 SHEETS | STA. | TO STA.

| F.A.I RTE. | SECTION | COUNTY | TOTAL SHEETS | SHEET NO. |
|---|---|---|---|---|
| 57 | (38-6,38-5)RS,BRR,CLV | IROQUOIS | 213 | 79 |
| | | CONTRACT NO. 66H62 | | |
| | ILLINOIS | FED. AID PROJECT | | |

Long Section Number

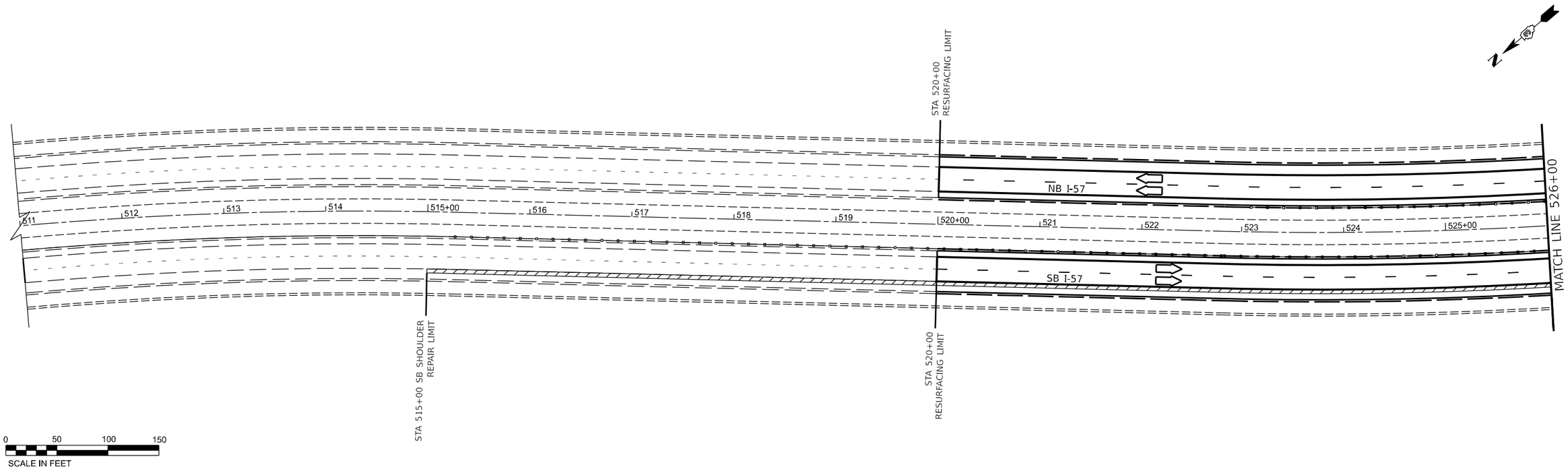


MODEL: Plan Sheets
FILE NAME: pw://ildot-pw.bentley.com:PWIDOT/Documents/IDOT Offices/District 3/ORD Projects/D398H62/CADData/CADsheets/66H62-Plan

| | | | |
|---|---|---|---|
| USER NAME = Joseph.Zagar | DESIGNED - | REVISED - | |
| | DRAWN - | REVISED - | |
| PLOT SCALE = 100.000 ' / in. | CHECKED - | REVISED - | |
| PLOT DATE = 12/15/2023 | DATE - | REVISED - | |

**STATE OF ILLINOIS**
**DEPARTMENT OF TRANSPORTATION**

**PLAN**

SCALE: | SHEET 1 OF 19 SHEETS | STA. | TO STA.

| F.A.I RTE. | SECTION | COUNTY | TOTAL SHEETS | SHEET NO. |
|---|---|---|---|---|
| 57 | (38-6,38-5)RS,BRR,CLV | IROQUOIS | 213 | 80 |
| | | CONTRACT NO. 66H62 | | |
| | ILLINOIS | FED. AID PROJECT | | |

Long Section Number

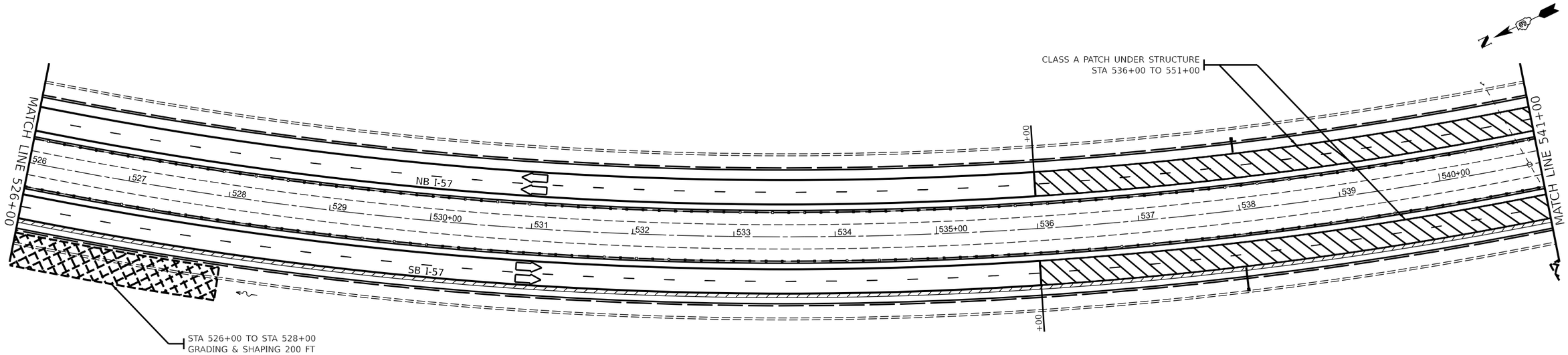


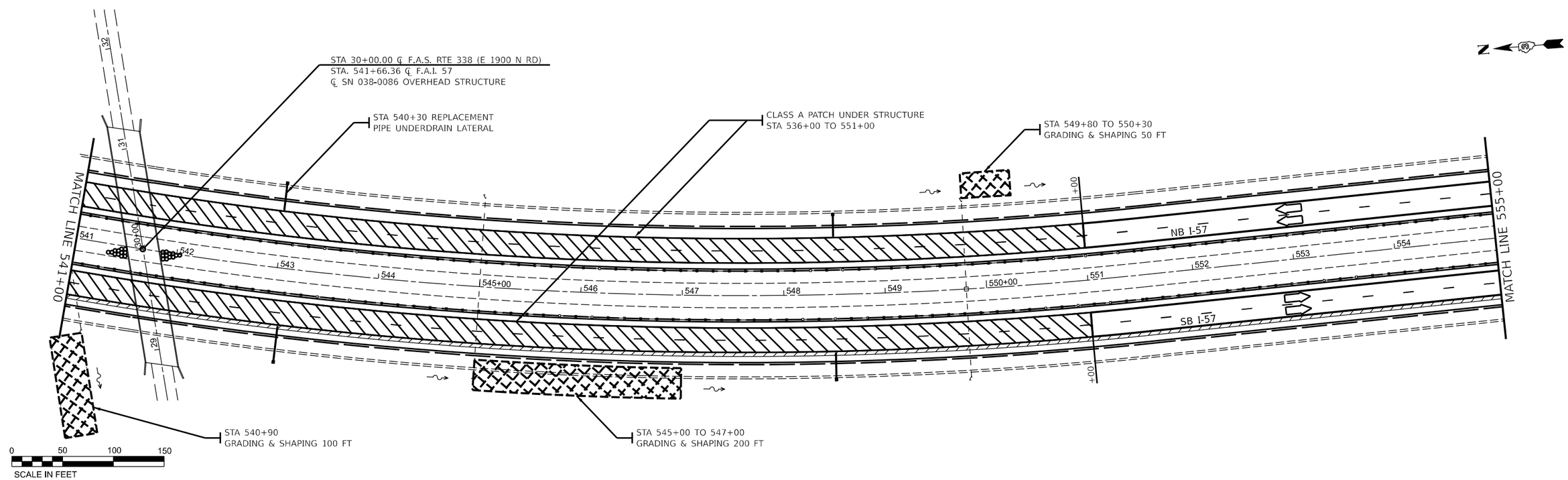


MODEL: Plan Sheets
FILE NAME: pw://ildot-pw.bentley.com:PWIDOT/Documents/IDOT Offices/District 3/ORD Projects/D389H62/CADData/CADsheets/66H62-Plan

| | | | |
|---|---|---|---|
| USER NAME = Joseph.Zagar | DESIGNED - | REVISED - | |
| | DRAWN - | REVISED - | |
| PLOT SCALE = 100.000 ' / in. | CHECKED - | REVISED - | |
| PLOT DATE = 12/15/2023 | DATE - | REVISED - | |

**STATE OF ILLINOIS**
**DEPARTMENT OF TRANSPORTATION**

**PLAN**

SCALE: SHEET 2 OF 19 SHEETS STA. TO STA.

| F.A.I RTE. | SECTION | COUNTY | TOTAL SHEETS | SHEET NO. |
|---|---|---|---|---|
| 57 | (38-6,38-5)RS,BRR,CLV | IROQUOIS | 213 | 81 |

CONTRACT NO. 66H62

ILLINOIS | FED. AID PROJECT

Long Section Number

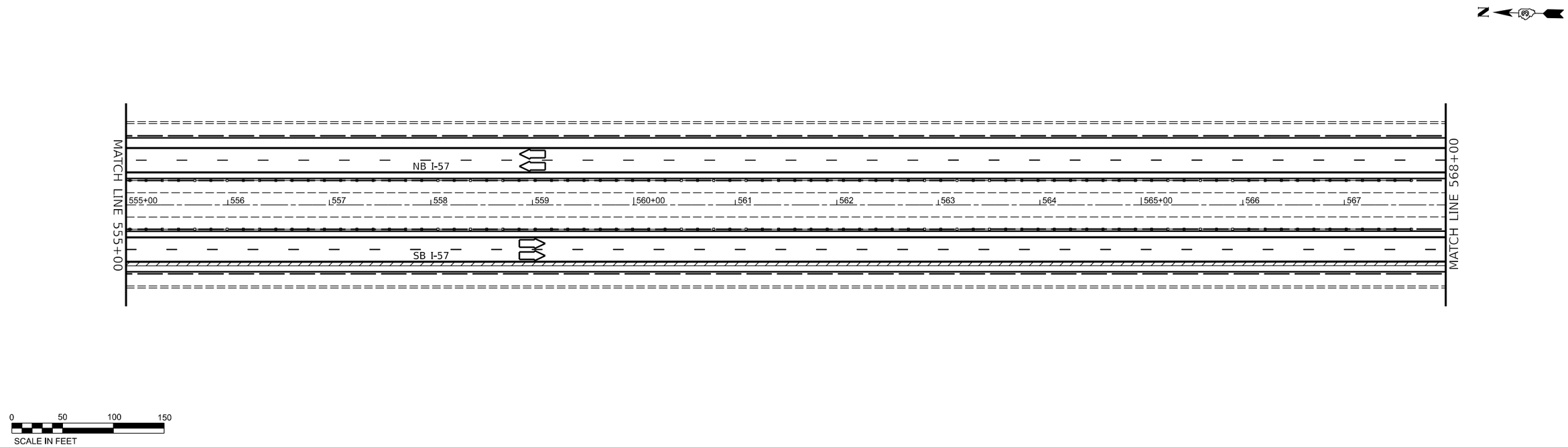


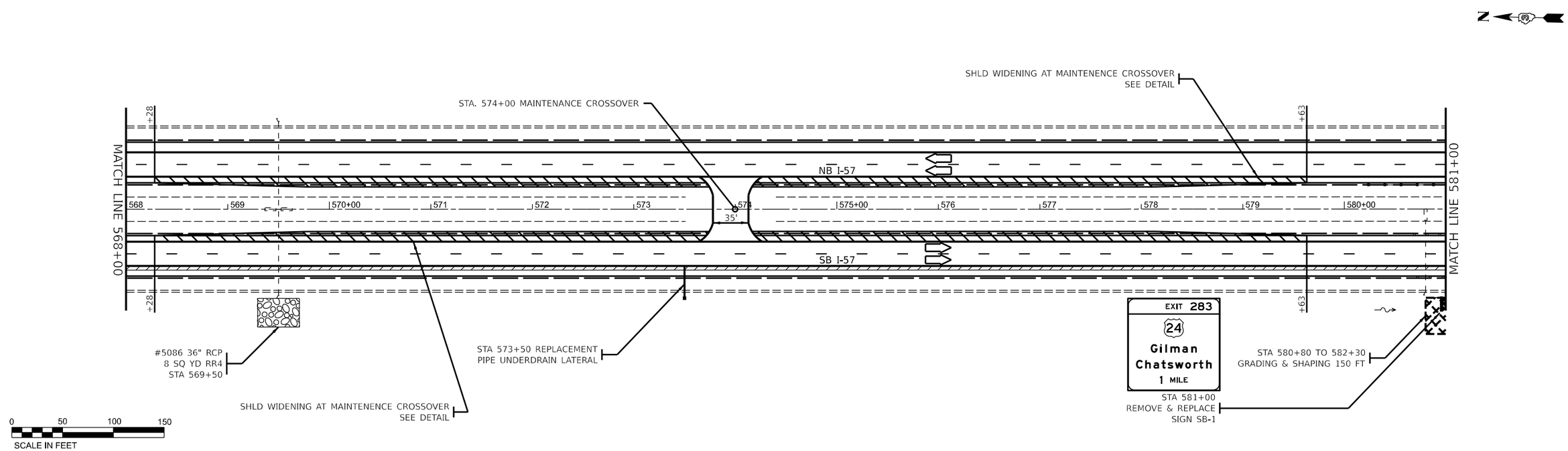


MODEL: Plan Sheets
FILE NAME: pw://idot-pw.bentley.com:PWIDOT/Documents/IDOT Offices/District 3/ORD Projects/D366H62/CADData/CADsheets/66H62-Plan

| | | | |
|---|---|---|---|
| USER NAME = Joseph.Zagar | DESIGNED - | REVISED - | |
| | DRAWN - | REVISED - | |
| PLOT SCALE = 100.000 ' / in. | CHECKED - | REVISED - | |
| PLOT DATE = 12/15/2023 | DATE - | REVISED - | |

**STATE OF ILLINOIS**
**DEPARTMENT OF TRANSPORTATION**

**PLAN**

SCALE: | SHEET 3 OF 19 SHEETS | STA. | TO STA.

| F.A.I RTE. | SECTION | COUNTY | TOTAL SHEETS | SHEET NO. |
|---|---|---|---|---|
| 57 | (38-6,38-5)RS,BRR,CLV | IROQUOIS | 213 | 82 |
| | | CONTRACT NO. 66H62 | | |
| | | ILLINOIS | FED. AID PROJECT | |

Long Section Number

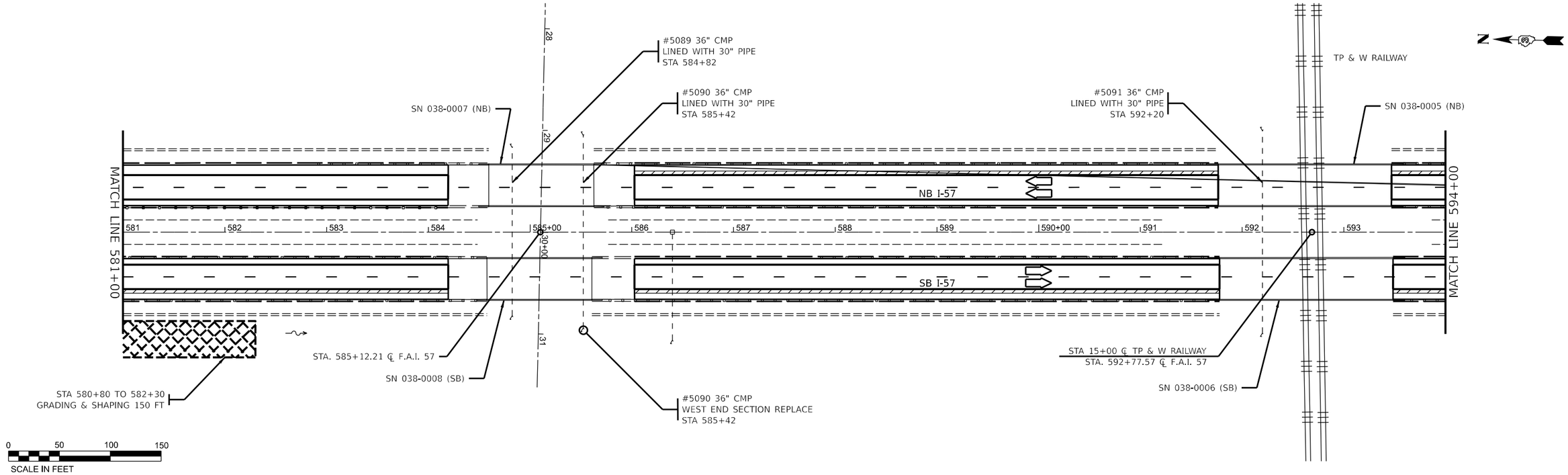


MODEL: Plan Sheets
FILE NAME: pw://idot-pw.bentley.com:PWIDOT/Documents/IDOT Offices/District 3/ORD Projects/D366H62/CADData/CADsheets/66H62-Plan

| | | | |
|---|---|---|---|
| USER NAME = Joseph.Zagar | DESIGNED - | REVISED - | |
| | DRAWN - | REVISED - | |
| PLOT SCALE = 100.000 ' / in. | CHECKED - | REVISED - | |
| PLOT DATE = 12/15/2023 | DATE - | REVISED - | |

**STATE OF ILLINOIS**
**DEPARTMENT OF TRANSPORTATION**

**PLAN**

SCALE: | SHEET 4 OF 19 SHEETS | STA. | TO STA.

| F.A.I RTE. | SECTION | COUNTY | TOTAL SHEETS | SHEET NO. |
|---|---|---|---|---|
| 57 | (38-6,38-5)RS,BRR,CLV | IROQUOIS | 213 | 83 |
| | | CONTRACT NO. 66H62 | | |
| | | ILLINOIS FED. AID PROJECT | | |

Long Section Number

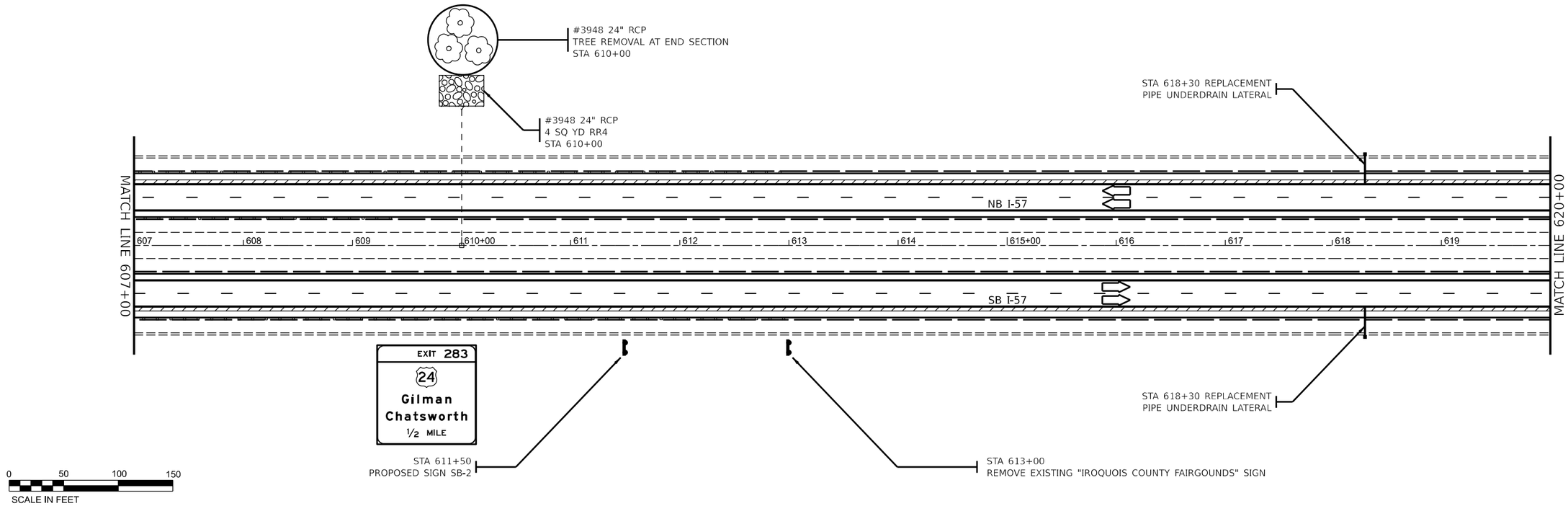


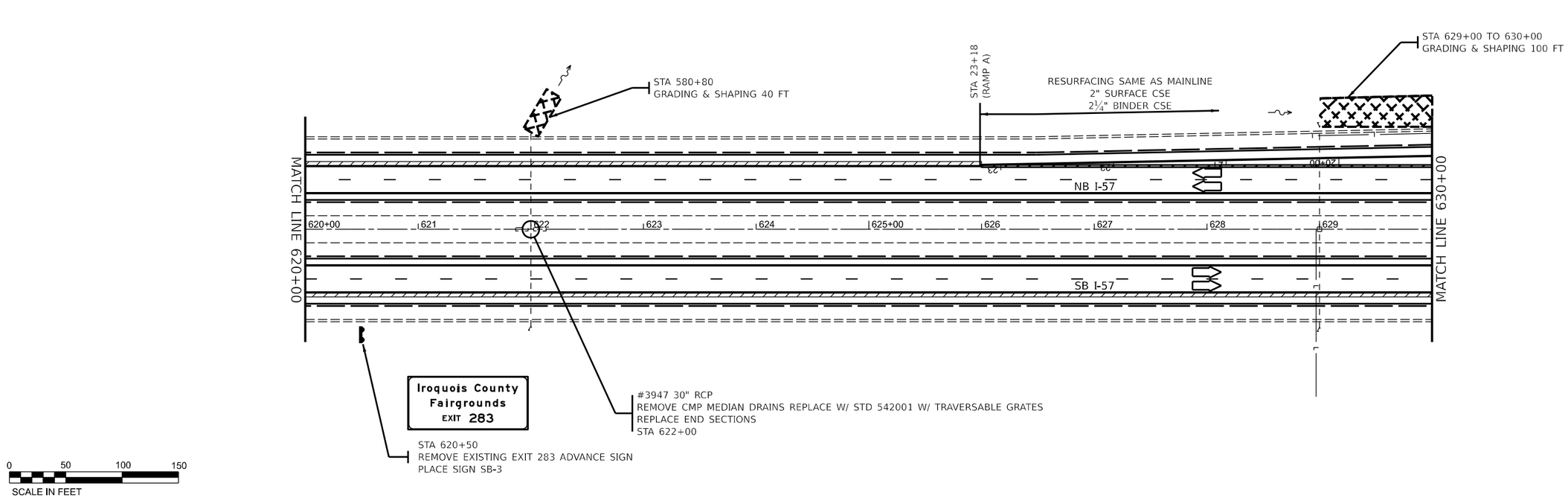


MODEL: Plan Sheets
FILE NAME: pw://ildot-pw.bentley.com:PWIDOT/Documents/IDOT Offices/District 3/ORD Projects/D366H62/CADData/CADsheets/66H62-Plan

| | | | |
|---|---|---|---|
| USER NAME = Joseph.Zagar | DESIGNED - | REVISED - | |
| | DRAWN - | REVISED - | |
| PLOT SCALE = 100.000 ' / in. | CHECKED - | REVISED - | |
| PLOT DATE = 12/15/2023 | DATE - | REVISED - | |

**STATE OF ILLINOIS**
**DEPARTMENT OF TRANSPORTATION**

**PLAN**

SCALE: | SHEET 5 OF 19 SHEETS | STA. | TO STA.

| F.A.I RTE. | SECTION | COUNTY | TOTAL SHEETS | SHEET NO. |
|---|---|---|---|---|
| 57 | (38-6,38-5)RS,BRR,CLV | IROQUOIS | 213 | 84 |
| | | CONTRACT NO. 66H62 | | |
| | | ILLINOIS | FED. AID PROJECT | |

Long Section Number

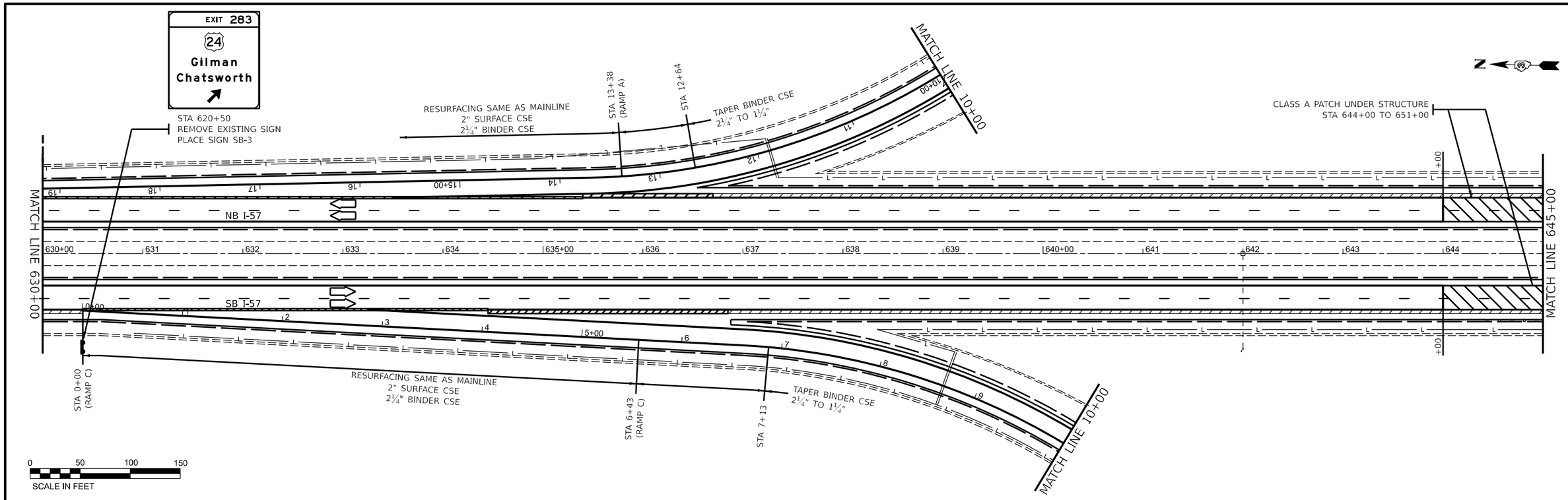


MODEL: Plan Sheets
FILE NAME: pw://idot-pw.bentley.com:PWIDOT/Documents/IDOT Offices/District 3/ORD Projects/D366H62/CADData/CADsheets/66H62-Plan

| | | | |
|---|---|---|---|
| USER NAME = Joseph.Zagar | DESIGNED - | REVISED - | |
| | DRAWN - | REVISED - | |
| PLOT SCALE = 100.000 ' / in. | CHECKED - | REVISED - | |
| PLOT DATE = 12/15/2023 | DATE - | REVISED - | |

**STATE OF ILLINOIS**
**DEPARTMENT OF TRANSPORTATION**

**PLAN**

SCALE: | SHEET 6 OF 19 SHEETS | STA. | TO STA.

| F.A.I RTE. | SECTION | COUNTY | TOTAL SHEETS | SHEET NO. |
|---|---|---|---|---|
| 57 | (38-6,38-5)RS,BRR,CLV | IROQUOIS | 213 | 85 |
| | | CONTRACT NO. 66H62 | | |
| | | ILLINOIS FED. AID PROJECT | | |

Long Section Number

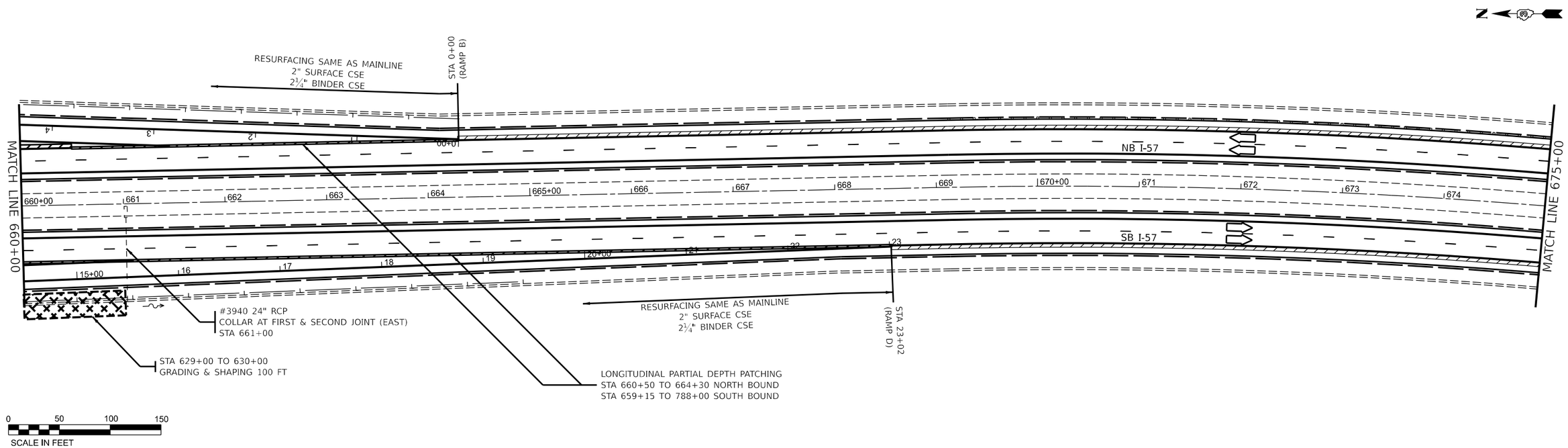


MODEL: Plan Sheets
FILE NAME: pw://idot-pw.bentley.com:PWIDOT/Documents/IDOT Offices/District 3/ORD Projects/D366H62/CADData/CADsheets/66H62-Plan

| | | | |
|---|---|---|---|
| USER NAME = Joseph.Zagar | DESIGNED - | REVISED - | |
| | DRAWN - | REVISED - | |
| PLOT SCALE = 100.000 ' / in. | CHECKED - | REVISED - | |
| PLOT DATE = 12/15/2023 | DATE - | REVISED - | |

**STATE OF ILLINOIS**
**DEPARTMENT OF TRANSPORTATION**

**PLAN**

SCALE: | SHEET 7 OF 19 SHEETS | STA. | TO STA.

| F.A.I RTE. | SECTION | COUNTY | TOTAL SHEETS | SHEET NO. |
|---|---|---|---|---|
| 57 | (38-6,38-5)RS,BRR,CLV | IROQUOIS | 213 | 86 |
| | | CONTRACT NO. 66H62 | | |
| | | ILLINOIS | FED. AID PROJECT | |

Long Section Number

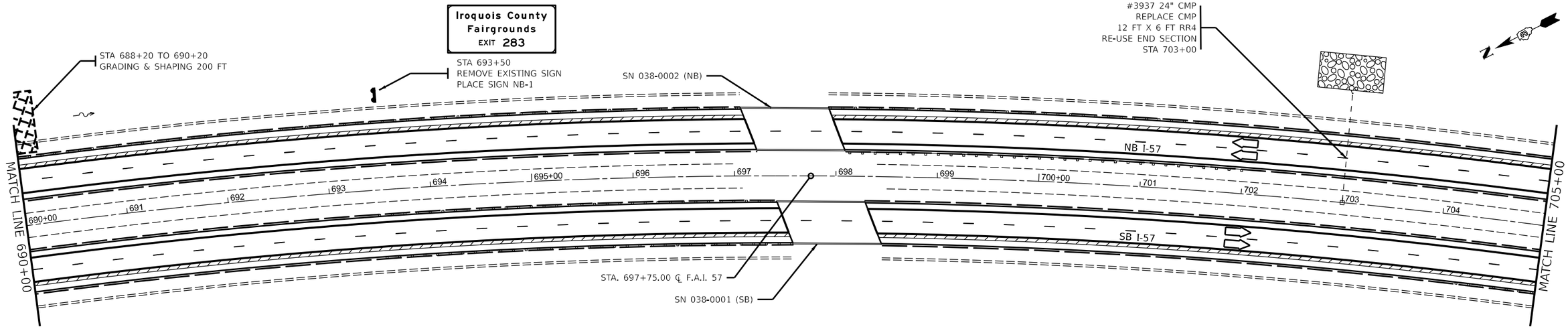


0 50 100 150
SCALE IN FEET

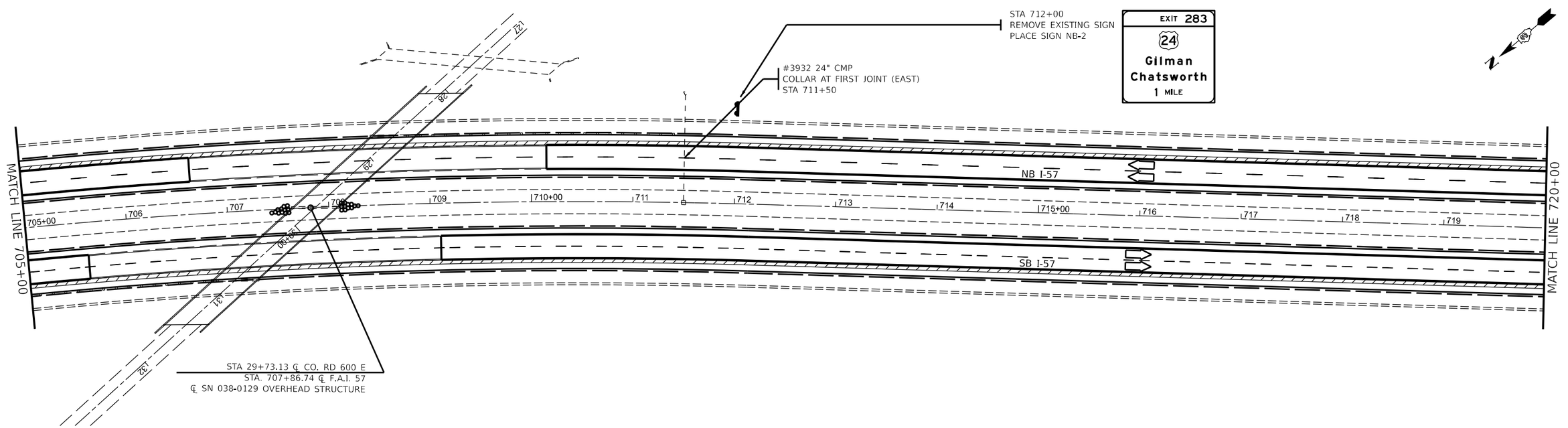


0 50 100 150
SCALE IN FEET

MODEL: Plan Sheets
FILE NAME: pw://bldxw.bentley.com:PWIDOT/Documents/IDOT Offices/District 3/ORD Projects/D396H62/CADData/CADsheets/66H62-Plan

| | | | |
|---|---|---|---|
| USER NAME = Joseph.Zagar | DESIGNED - | REVISED - | |
| | DRAWN - | REVISED - | |
| PLOT SCALE = 100,000 ' / in. | CHECKED - | REVISED - | |
| PLOT DATE = 12/15/2023 | DATE - | REVISED - | |

**STATE OF ILLINOIS**
**DEPARTMENT OF TRANSPORTATION**

**PLAN**

SCALE: SHEET 8 OF 19 SHEETS STA. TO STA.

| F.A.I RTE. | SECTION | COUNTY | TOTAL SHEETS | SHEET NO. |
|---|---|---|---|---|
| 57 | (38-6,38-5)RS,BRR,CLV | IROQUOIS | 213 | 87 |
| | | CONTRACT NO. 66H62 | | |
| | ILLINOIS | FED. AID PROJECT | | |

Long Section Number

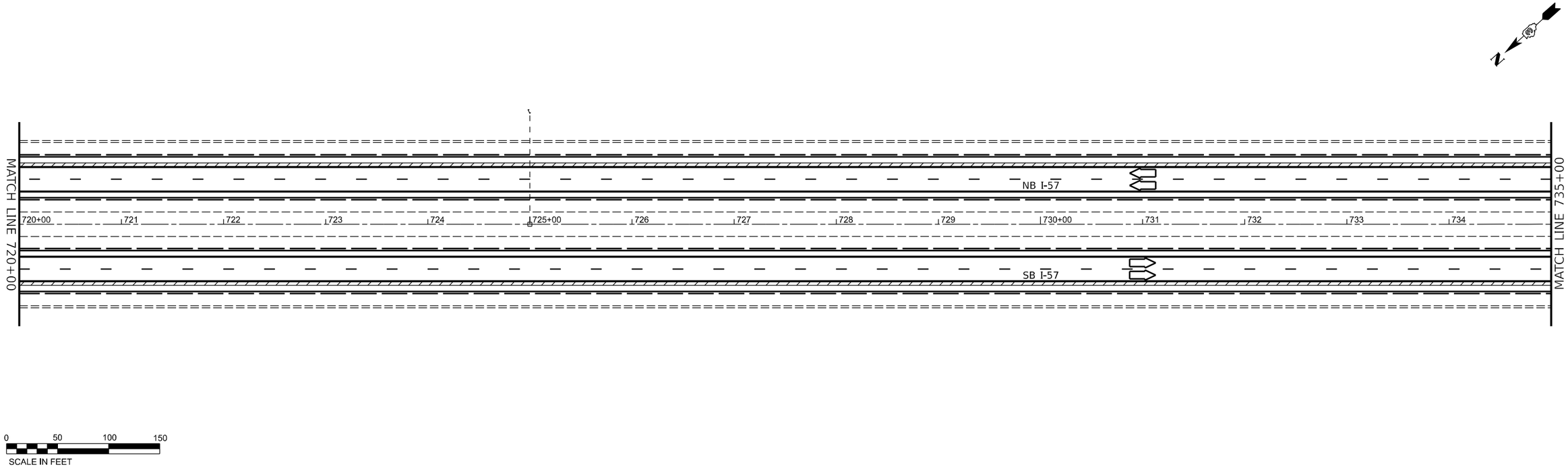


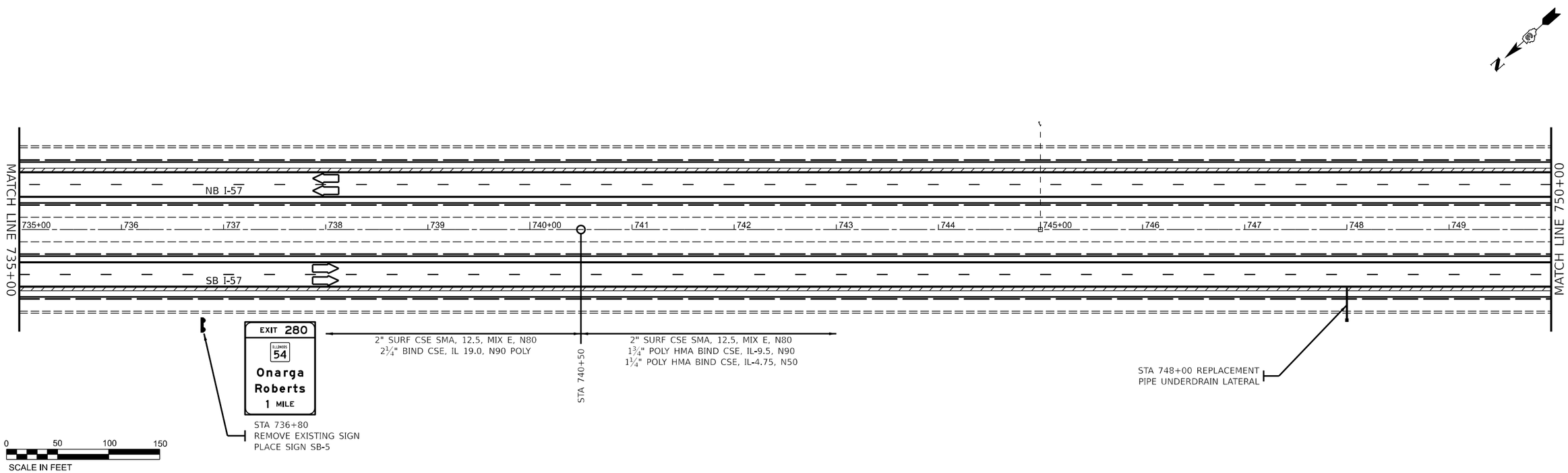


MODEL: Plan Sheets
FILE NAME: pw://ildot-pw.bentley.com:PWIDOT/Documents/IDOT Offices/District 3/ORD Projects/D366H62/CADData/CADsheets/66H62-Plan

| | | | |
|---|---|---|---|
| USER NAME = Joseph.Zagar | DESIGNED - | REVISED - | |
| | DRAWN - | REVISED - | |
| PLOT SCALE = 100,000 ' / in. | CHECKED - | REVISED - | |
| PLOT DATE = 12/15/2023 | DATE - | REVISED - | |

**STATE OF ILLINOIS**
**DEPARTMENT OF TRANSPORTATION**

**PLAN**

SCALE: | SHEET 9 OF 19 SHEETS | STA. | TO STA.

| F.A.I RTE. | SECTION | COUNTY | TOTAL SHEETS | SHEET NO. |
|---|---|---|---|---|
| 57 | (38-6,38-5)RS,BRR,CLV | IROQUOIS | 213 | 88 |
| | | CONTRACT NO. 66H62 | | |
| | | ILLINOIS FED. AID PROJECT | | |

Long Section Number

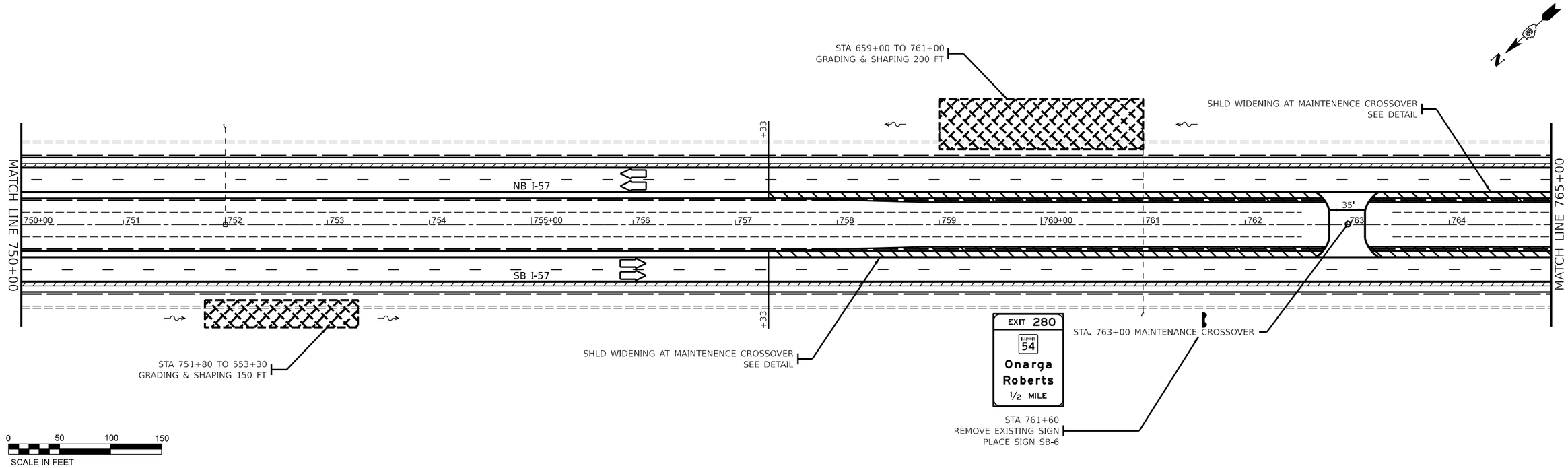


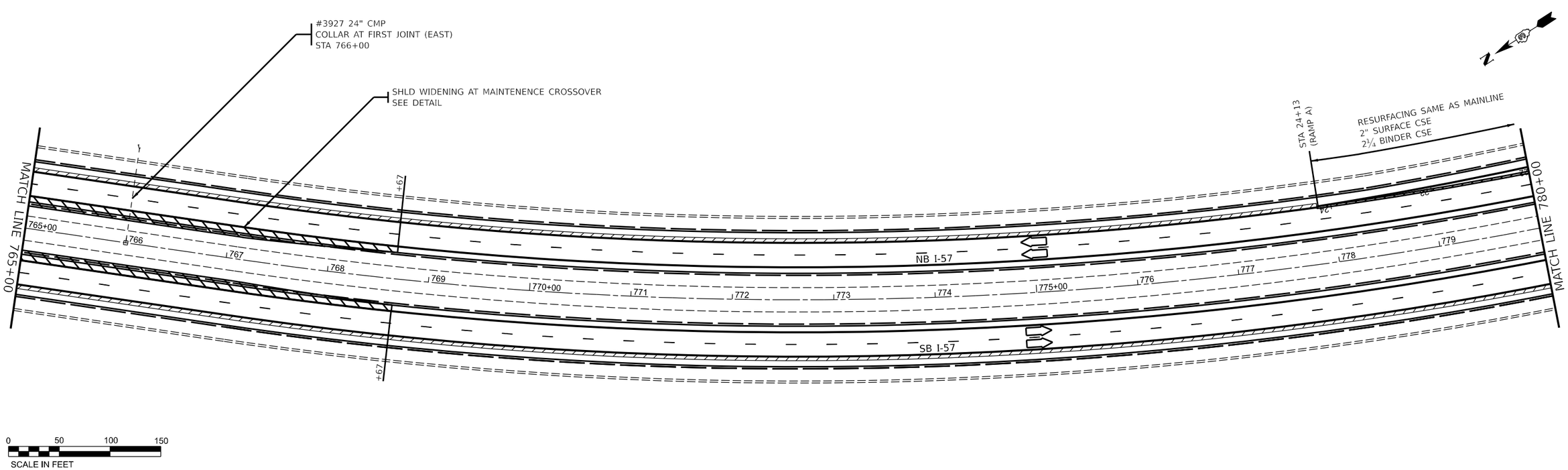


MODEL: Plan Sheets
FILE NAME: pw://idot-pw.bentley.com:PWIDOT/Documents/IDOT Offices/District 3/ORD Projects/D366H62/CADData/CADsheets/66H62-Plan

| | | | |
|---|---|---|---|
| USER NAME = Joseph.Zagar | DESIGNED - | REVISED - | |
| | DRAWN - | REVISED - | |
| PLOT SCALE = 100,000 ' / in. | CHECKED - | REVISED - | |
| PLOT DATE = 12/15/2023 | DATE - | REVISED - | |

**STATE OF ILLINOIS**
**DEPARTMENT OF TRANSPORTATION**

**PLAN**

SCALE: | SHEET 10 OF 19 SHEETS | STA. | TO STA.

| F.A.I RTE. | SECTION | COUNTY | TOTAL SHEETS | SHEET NO. |
|---|---|---|---|---|
| 57 | (38-6,38-5)RS,BRR,CLV | IROQUOIS | 213 | 89 |
| | | CONTRACT NO. 66H62 | | |
| | | ILLINOIS | FED. AID PROJECT | |

Long Section Number

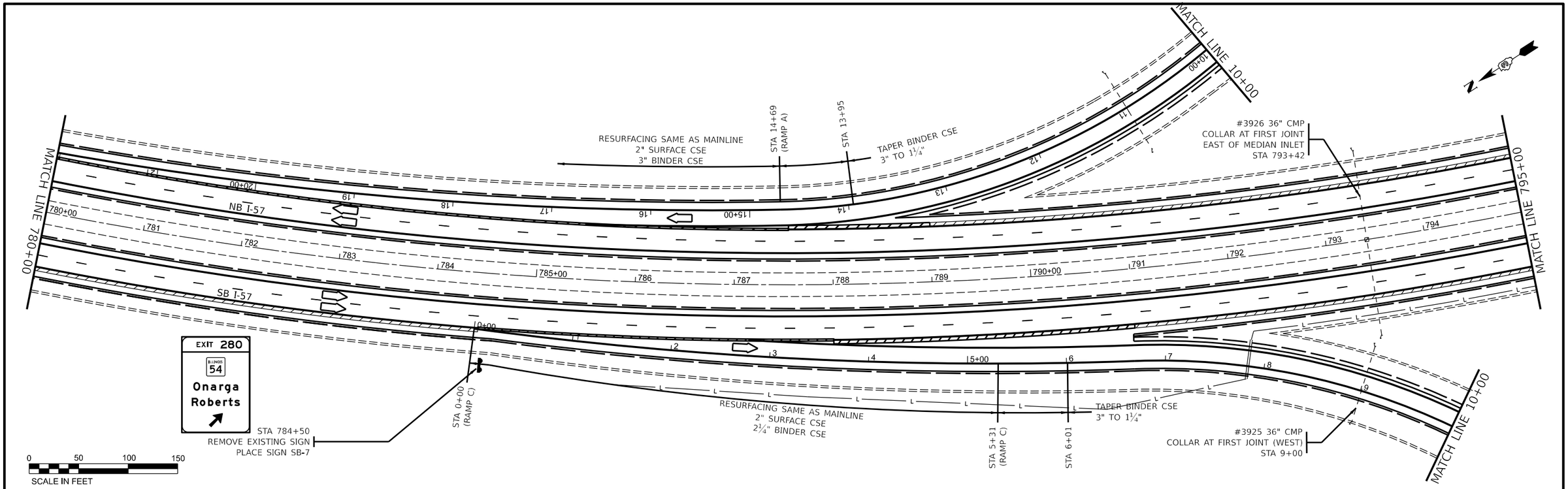


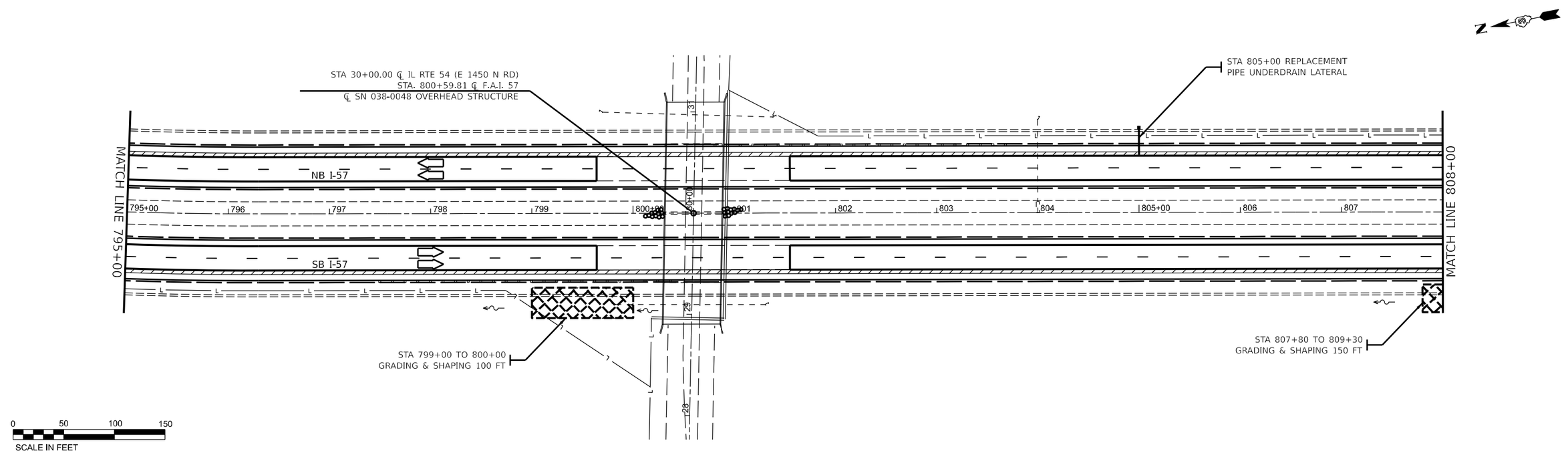


MODEL: Plan Sheets
FILE NAME: pw://bidview.bentley.com:PWIDOT/Documents/IDOT Offices/District 3/ORD Projects/D398H62/CADData/CADsheets/66H62-Plan

| | | | |
|---|---|---|---|
| USER NAME = Joseph.Zagar | DESIGNED - | REVISED - | |
| | DRAWN - | REVISED - | |
| PLOT SCALE = 100,000 ' / in. | CHECKED - | REVISED - | |
| PLOT DATE = 12/15/2023 | DATE - | REVISED - | |

**STATE OF ILLINOIS**
**DEPARTMENT OF TRANSPORTATION**

**PLAN**

SCALE: SHEET 11 OF 19 SHEETS STA. TO STA.

| F.A.I RTE. | SECTION | COUNTY | TOTAL SHEETS | SHEET NO. |
|---|---|---|---|---|
| 57 | (38-6,38-5)RS,BRR,CLV | IROQUOIS | 213 | 90 |
| | | CONTRACT NO. 66H62 | | |
| | ILLINOIS | FED. AID PROJECT | | |

Long Section Number

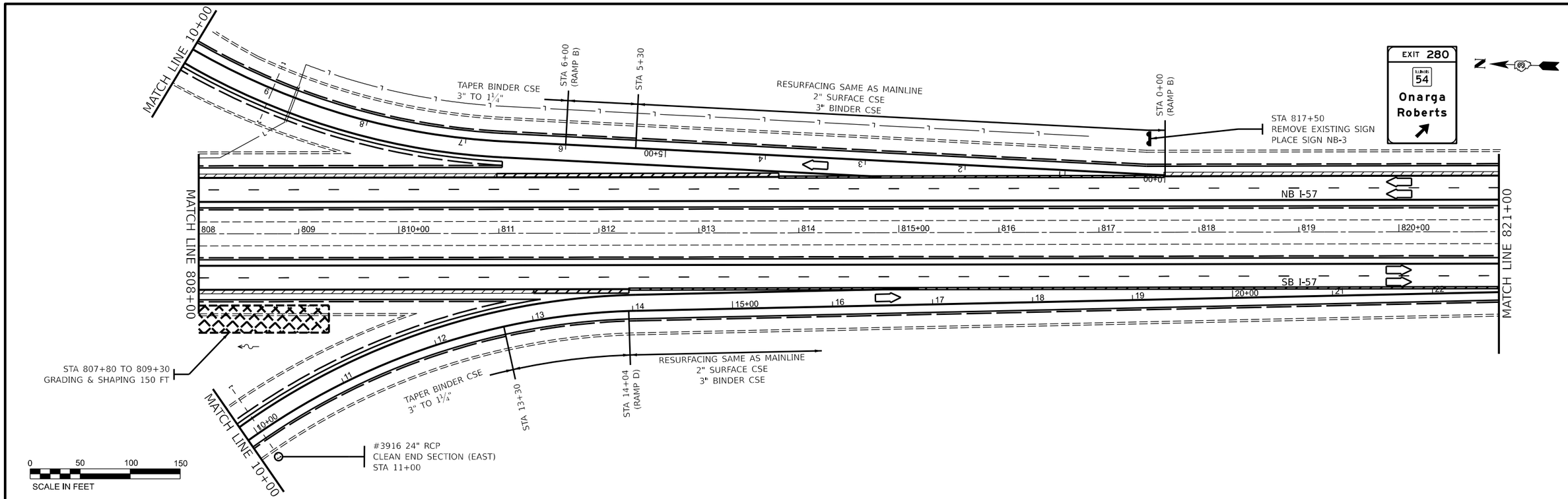


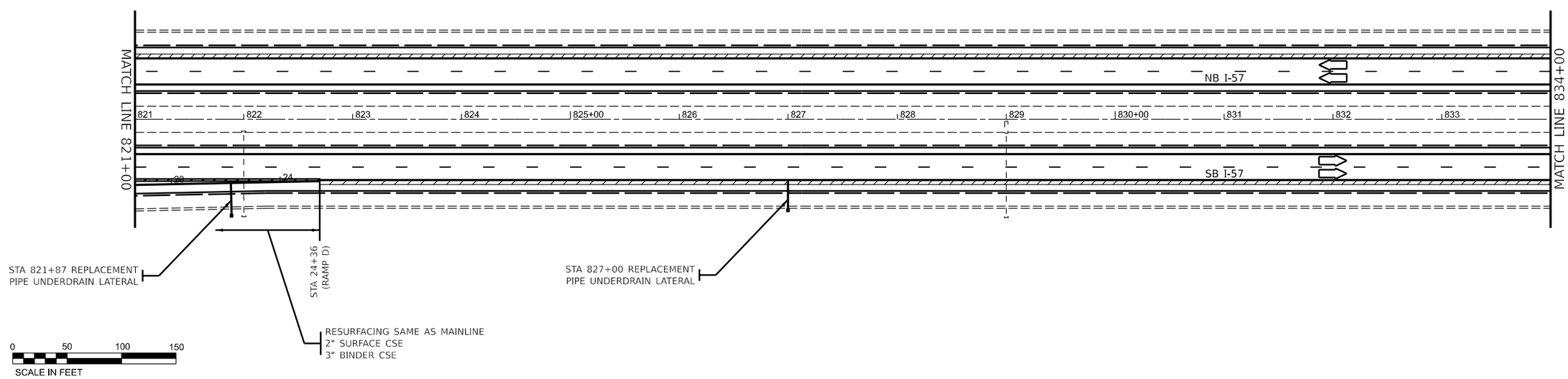


MODEL: Plan Sheets
FILE NAME: pw://bidview.bentley.com:PWIDOT/Documents/IDOT Offices/District 3/ORD Projects/D398H62/CADData/CADsheets/66H62-Plan

| | | | |
|---|---|---|---|
| USER NAME = Joseph.Zagar | DESIGNED - | REVISED - | |
| | DRAWN - | REVISED - | |
| PLOT SCALE = 100,000 ' / in. | CHECKED - | REVISED - | |
| PLOT DATE = 12/15/2023 | DATE - | REVISED - | |

**STATE OF ILLINOIS**
**DEPARTMENT OF TRANSPORTATION**

**PLAN**

SCALE: SHEET 12 OF 19 SHEETS STA. TO STA.

| F.A.I RTE. | SECTION | COUNTY | TOTAL SHEETS | SHEET NO. |
|---|---|---|---|---|
| 57 | (38-6,38-5)RS,BRR,CLV | IROQUOIS | 213 | 91 |
| | | CONTRACT NO. 66H62 | | |
| | ILLINOIS | FED. AID PROJECT | | |

Long Section Number

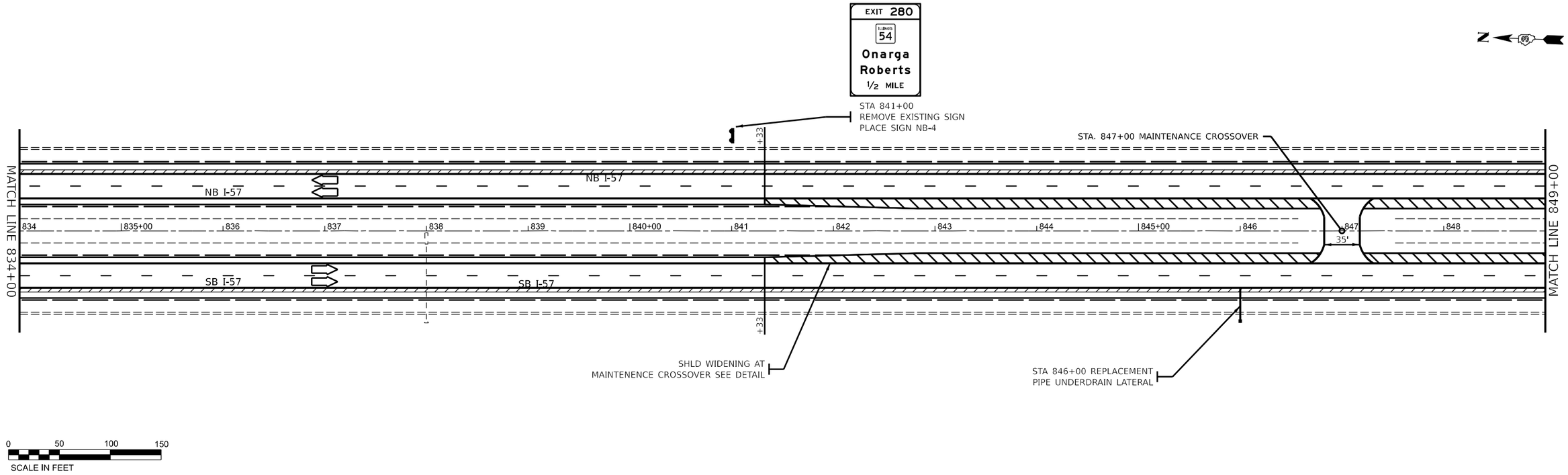


MODEL: Plan Sheets
FILE NAME: pw://idot-pw.bentley.com:PWIDOT/Documents/IDOT Offices/District 3/ORD Projects/D366H62/CADData/CADsheets/66H62-Plan

| | | | |
|---|---|---|---|
| USER NAME = Joseph.Zagar | DESIGNED - | REVISED - | |
| | DRAWN - | REVISED - | |
| PLOT SCALE = 100.000 ' / in. | CHECKED - | REVISED - | |
| PLOT DATE = 12/15/2023 | DATE - | REVISED - | |

**STATE OF ILLINOIS**
**DEPARTMENT OF TRANSPORTATION**

**PLAN**

SCALE: | SHEET 13 OF 19 SHEETS | STA. | TO STA.

| F.A.I RTE. | SECTION | COUNTY | TOTAL SHEETS | SHEET NO. |
|---|---|---|---|---|
| 57 | (38-6,38-5)RS,BRR,CLV | IROQUOIS | 213 | 92 |
| | | CONTRACT NO. 66H62 | | |
| | | ILLINOIS | FED. AID PROJECT | |

Long Section Number

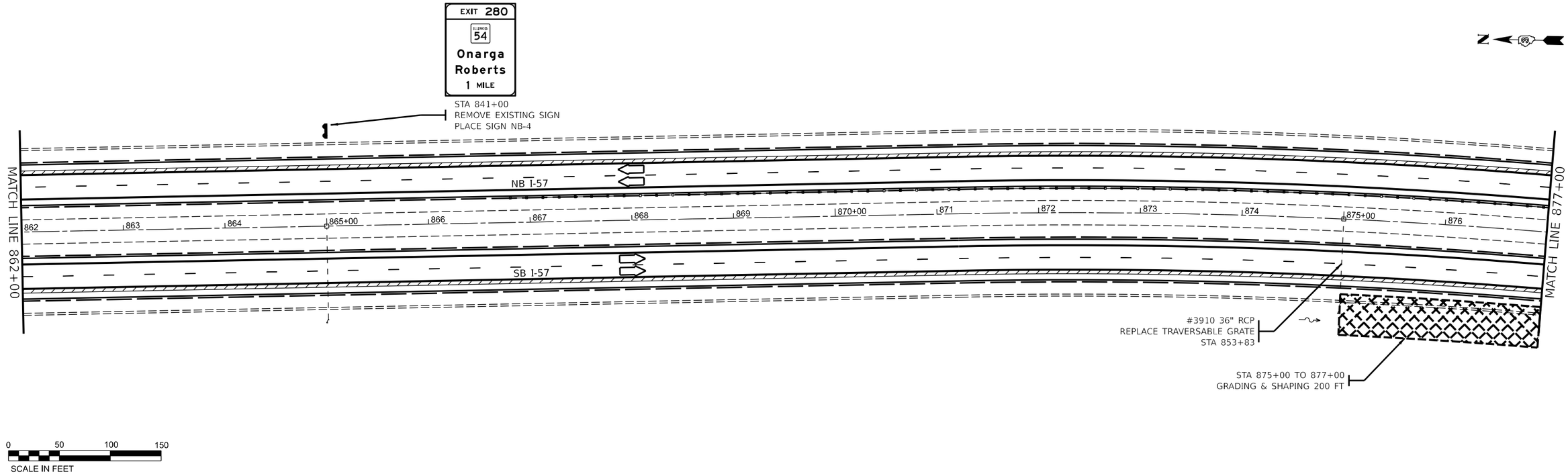


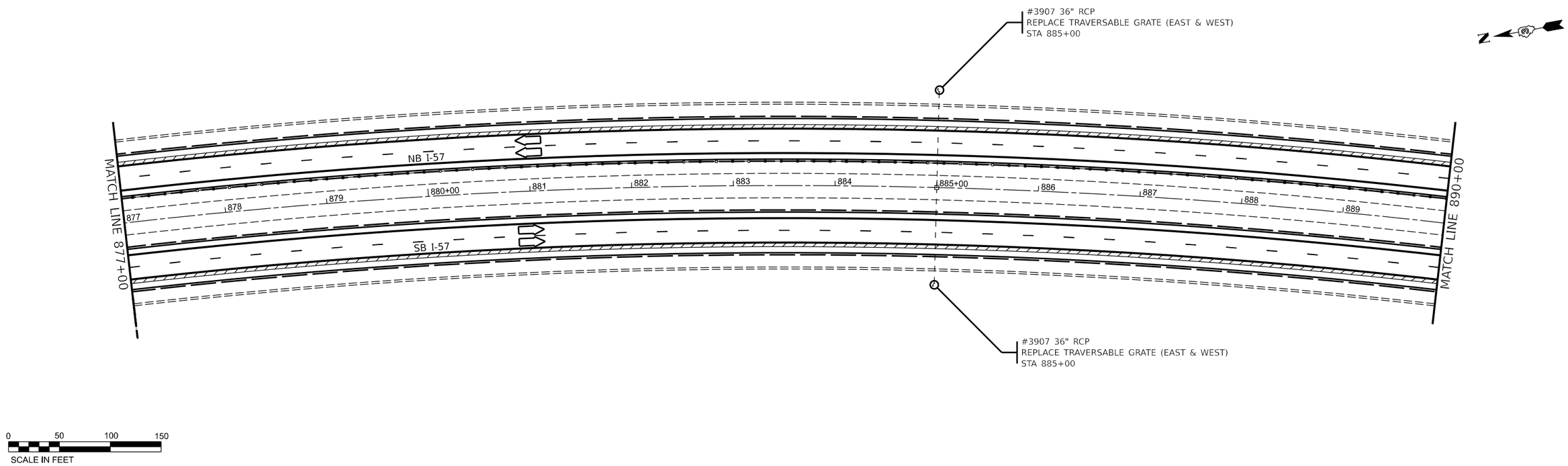


MODEL: Plan Sheets
FILE NAME: pw://bldewy.bentley.com:PWIDOT/Documents/IDOT Offices/District 3/ORD Projects/D398H62/CADData/CADsheets/66H62-Plan

| | | | |
|---|---|---|---|
| USER NAME = Joseph.Zagar | DESIGNED - | REVISED - | |
| | DRAWN - | REVISED - | |
| PLOT SCALE = 100,000 ' / in. | CHECKED - | REVISED - | |
| PLOT DATE = 12/15/2023 | DATE - | REVISED - | |

**STATE OF ILLINOIS**
**DEPARTMENT OF TRANSPORTATION**

**PLAN**

SCALE: | SHEET 14 OF 19 SHEETS | STA. | TO STA.

| F.A.I RTE. | SECTION | COUNTY | TOTAL SHEETS | SHEET NO. |
|---|---|---|---|---|
| 57 | (38-6,38-5)RS,BRR,CLV | IROQUOIS | 213 | 93 |
| | | CONTRACT NO. 66H62 | | |
| | ILLINOIS | FED. AID PROJECT | | |

Long Section Number

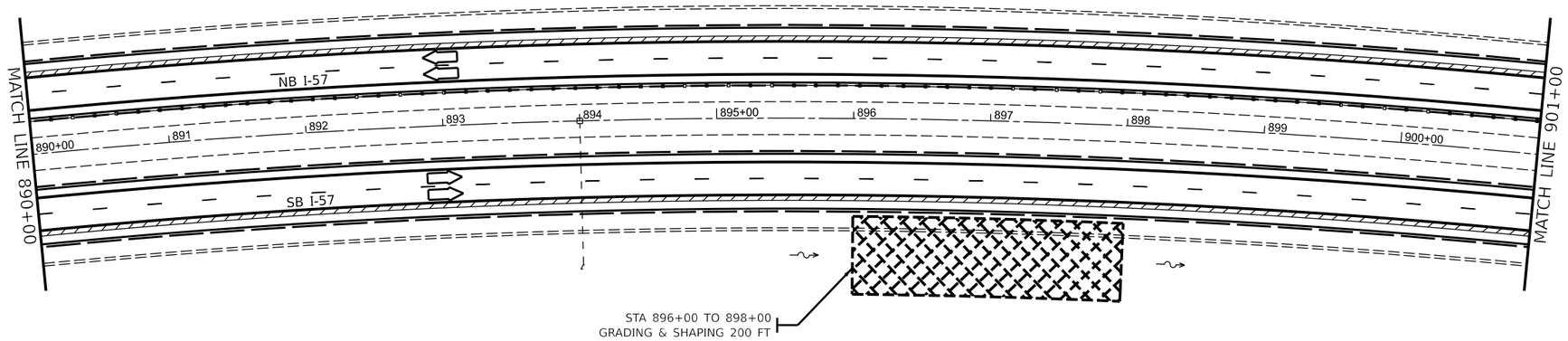


0 50 100 150
SCALE IN FEET

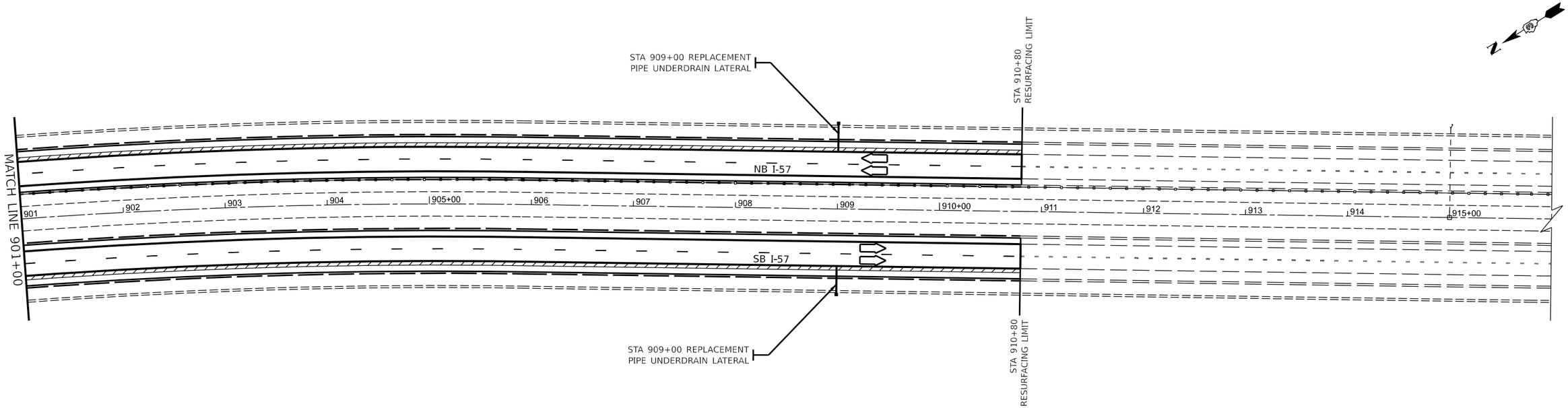


0 50 100 150
SCALE IN FEET

MODEL: Plan Sheets
FILE NAME: pw://bldxw.bentley.com:PWIDOT/Documents/IDOT Offices/District 3/ORD Projects/D398H62/CADData/CADsheets/66H62-Plan

| | | | |
|---|---|---|---|
| USER NAME = Joseph.Zagar | DESIGNED - | REVISED - | |
| | DRAWN - | REVISED - | |
| PLOT SCALE = 100,000 ' / in. | CHECKED - | REVISED - | |
| PLOT DATE = 12/15/2023 | DATE - | REVISED - | |

**STATE OF ILLINOIS**
**DEPARTMENT OF TRANSPORTATION**

**PLAN**

SCALE: SHEET 15 OF 19 SHEETS STA. TO STA.

| F.A.I RTE. | SECTION | COUNTY | TOTAL SHEETS | SHEET NO. |
|---|---|---|---|---|
| 57 | (38-6,38-5)RS,BRR,CLV | IROQUOIS | 213 | 94 |
| | | CONTRACT NO. 66H62 | | |
| | ILLINOIS | FED. AID PROJECT | | |

Long Section Number

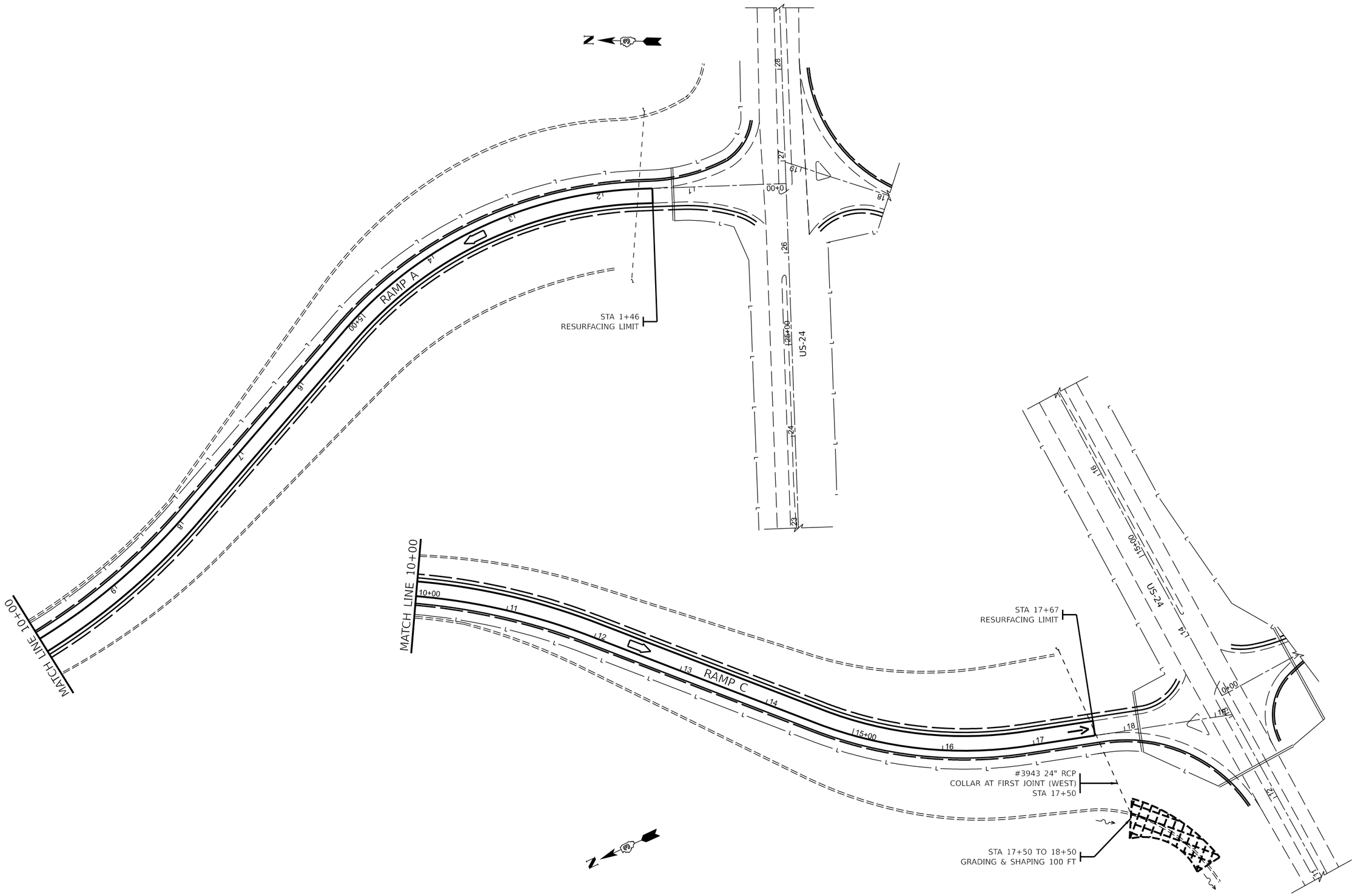


MODEL: Plan Sheets
FILE NAME: pw://idot-pw.bentley.com:PWIDOT/Documents/IDOT Offices/District 3/ORD Projects/D366H62/CADData/CADsheets/66H62-Plan

| | | | |
|---|---|---|---|
| USER NAME = Joseph.Zagar | DESIGNED - | REVISED - | |
| | DRAWN - | REVISED - | |
| PLOT SCALE = 100.000 ' / in. | CHECKED - | REVISED - | |
| PLOT DATE = 12/15/2023 | DATE - | REVISED - | |

**STATE OF ILLINOIS**
**DEPARTMENT OF TRANSPORTATION**

**PLAN**

SCALE: | SHEET 16 OF 19 SHEETS | STA. | TO STA.

| F.A.I RTE. | SECTION | COUNTY | TOTAL SHEETS | SHEET NO. |
|---|---|---|---|---|
| 57 | (38-6,38-5)RS,BRR,CLV | IROQUOIS | 213 | 95 |
| | | CONTRACT NO. 66H62 | | |
| | | ILLINOIS FED. AID PROJECT | | |

Long Section Number

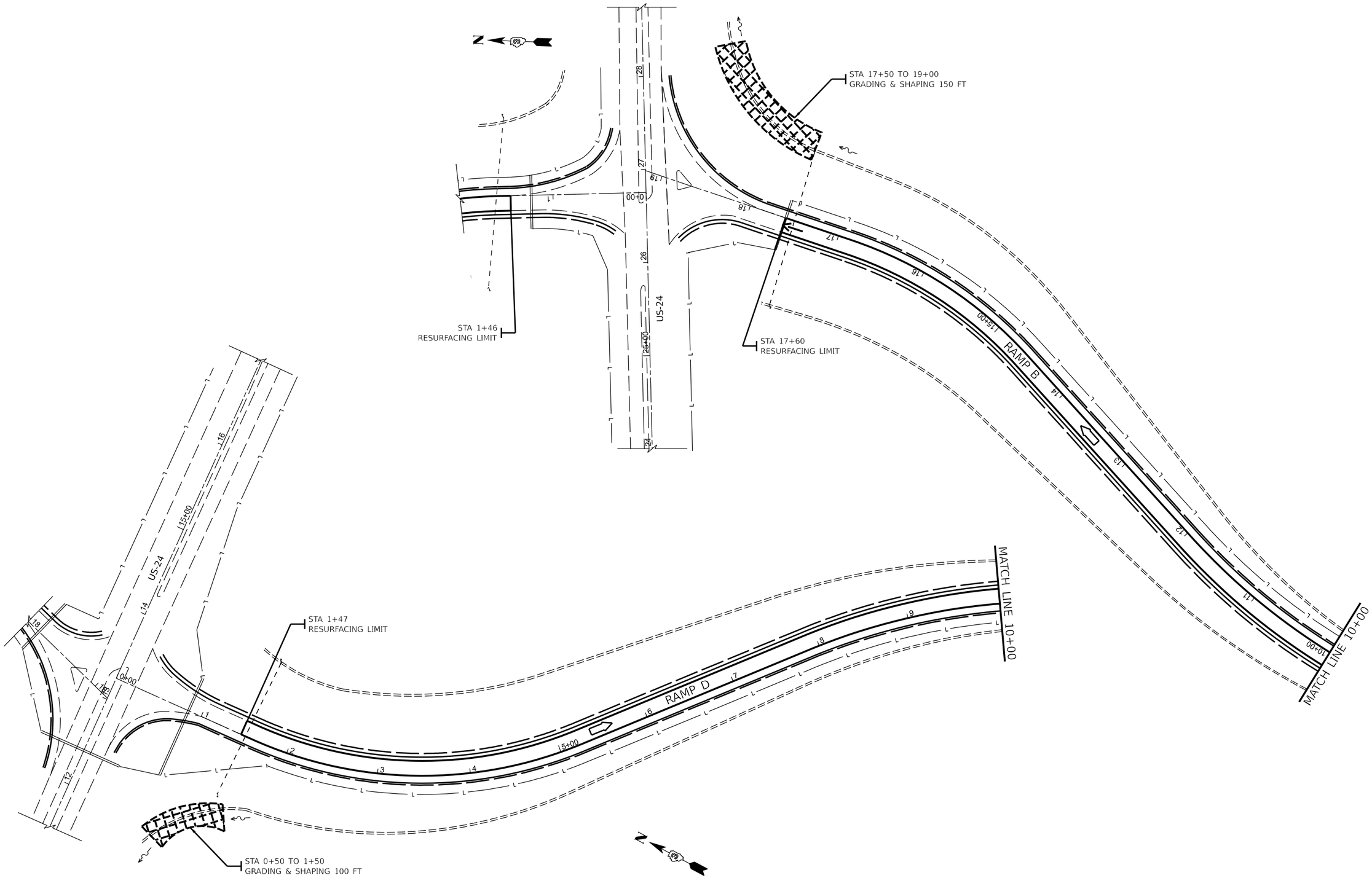


MODEL: Plan Sheets
FILE NAME: pw://idot-pw.bentley.com:PWIDOT/Documents/IDOT Offices/District 3/ORD Projects/D366H62/CADData/CADsheets/66H62-Plan

| | | | |
|---|---|---|---|
| USER NAME = Joseph.Zagar | DESIGNED - | REVISED - | |
| | DRAWN - | REVISED - | |
| PLOT SCALE = 100.000 ' / in. | CHECKED - | REVISED - | |
| PLOT DATE = 12/15/2023 | DATE - | REVISED - | |

**STATE OF ILLINOIS**
**DEPARTMENT OF TRANSPORTATION**

**PLAN**

SCALE: | SHEET 17 OF 19 SHEETS | STA. | TO STA.

| F.A.I RTE. | SECTION | COUNTY | TOTAL SHEETS | SHEET NO. |
|---|---|---|---|---|
| 57 | (38-6,38-5)RS,BRR,CLV | IROQUOIS | 213 | 96 |
| | | CONTRACT NO. 66H62 | | |
| | | ILLINOIS | FED. AID PROJECT | |

Long Section Number

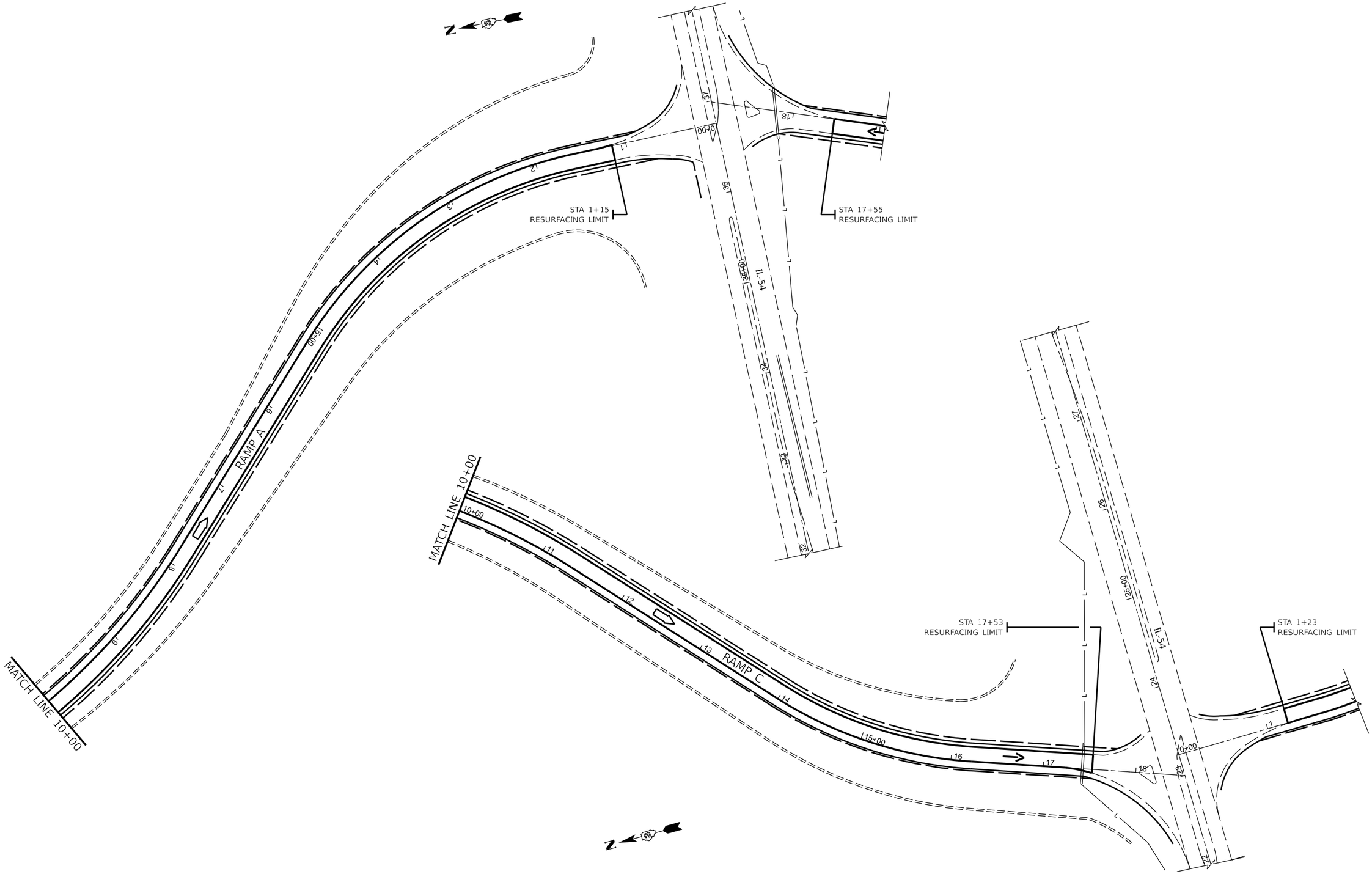


MODEL: Plan Sheets
FILE NAME: pw://idot-pw.bentley.com:PWIDOT/Documents/IDOT Offices/District 3/ORD Projects/D366H62/CADData/CADsheets/66H62-Plan

| | | | |
|---|---|---|---|
| USER NAME = Joseph.Zagar | DESIGNED - | REVISED - | |
| | DRAWN - | REVISED - | |
| PLOT SCALE = 100,000 ' / in. | CHECKED - | REVISED - | |
| PLOT DATE = 12/15/2023 | DATE - | REVISED - | |

**STATE OF ILLINOIS**
**DEPARTMENT OF TRANSPORTATION**

**PLAN**

SCALE: | SHEET 18 OF 19 SHEETS | STA. | TO STA.

| F.A.I RTE. | SECTION | COUNTY | TOTAL SHEETS | SHEET NO. |
|---|---|---|---|---|
| 57 | (38-6,38-5)RS,BRR,CLV | IROQUOIS | 213 | 97 |
| | | CONTRACT NO. 66H62 | | |
| | | ILLINOIS FED. AID PROJECT | | |

Long Section Number

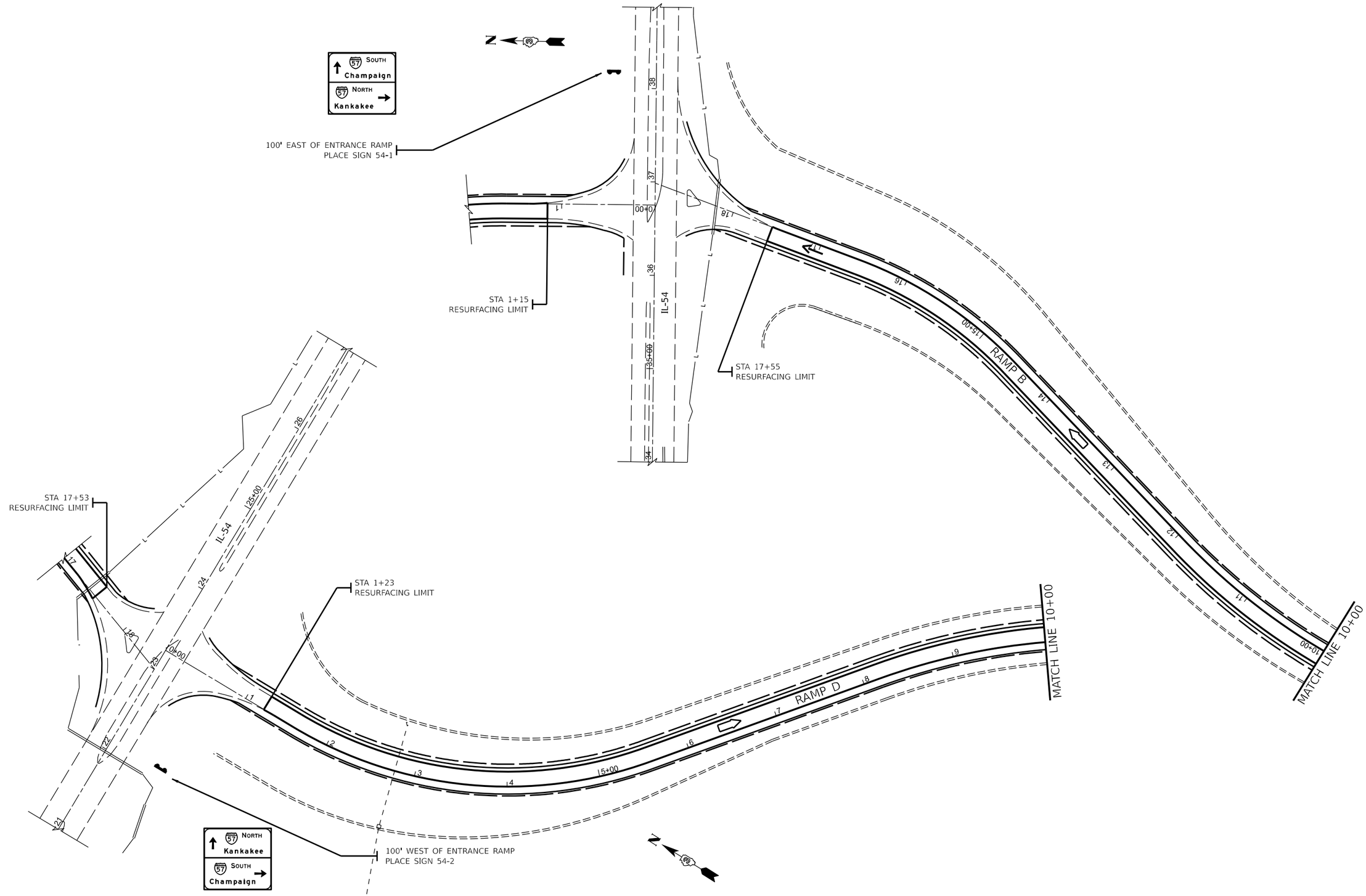


MODEL: Plan Sheets
FILE NAME: pw://bldow.bentley.com:PWIDOT/Documents/IDOT Offices/District 3/ORD Projects/D398H62/CADData/CADsheets/66H62-Plan

| | | | |
|---|---|---|---|
| USER NAME = Joseph.Zagar | DESIGNED - | REVISED - | |
| | DRAWN - | REVISED - | |
| PLOT SCALE = 100,000 ' / in. | CHECKED - | REVISED - | |
| PLOT DATE = 12/15/2023 | DATE - | REVISED - | |

**STATE OF ILLINOIS**
**DEPARTMENT OF TRANSPORTATION**

**PLAN**

SCALE: | SHEET 19 OF 19 SHEETS | STA. | TO STA.

| F.A.I RTE. | SECTION | COUNTY | TOTAL SHEETS | SHEET NO. |
|---|---|---|---|---|
| 57 | (38-6,38-5)RS,BRR,CLV | IROQUOIS | 213 | 98 |
| | | CONTRACT NO. 66H62 | | |
| | ILLINOIS | FED. AID PROJECT | | |

Long Section Number

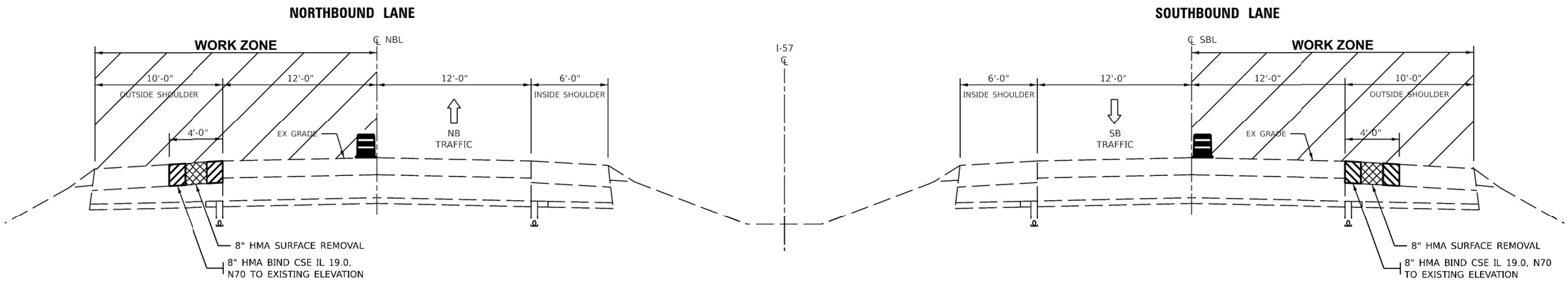


## PRE–STAGE CONFIGURATION

(LOOKING SOUTH)
STA 520+00 TO STA 740+50

LEGEND

- TRAFFIC CONTROL DRUM
- ① TEMPORARY PAVEMENT MARKING - WHITE
- ② TEMPORARY PAVEMENT MARKING - YELLOW
- WORK COMPLETED IN PREVIOUS STAGE

### PRESTAGE NOTES:

- NORTHBOUND & SOUTHBOUND OUTSIDE SHOULDERS: MILL THE INNER 4' OF THESE SHOULDERS AND PLACE BINDER MIX TO TO EXISTING GRADE TO SUPPORT STAGE 1 TRAFFIC.
- RIPRAP CHUTES TO BE CONSTRUCTED ON NORTHBOUND AND SOUTHBOUND OUTSIDE SHOULDERS.
- PERFORM CLASS A PATCHING.
- APPLY TEMPORARY PAVEMENT MARKING FOR STAGE 1.
- RESOLVE ALL EXPOSURE TO DROP-OFFS PER SPECIAL PROVISIONS.
- UTILIZE HWY STNDS 701400, 701401 FOR PRE-STAGE WORKZONE. USE 701411 & 701456 FOR ALL RAMP TRAFFIC CONTROL. SMART TRAFFIC CONTROL TO BE USED FOR ADVANCE SIGNING.

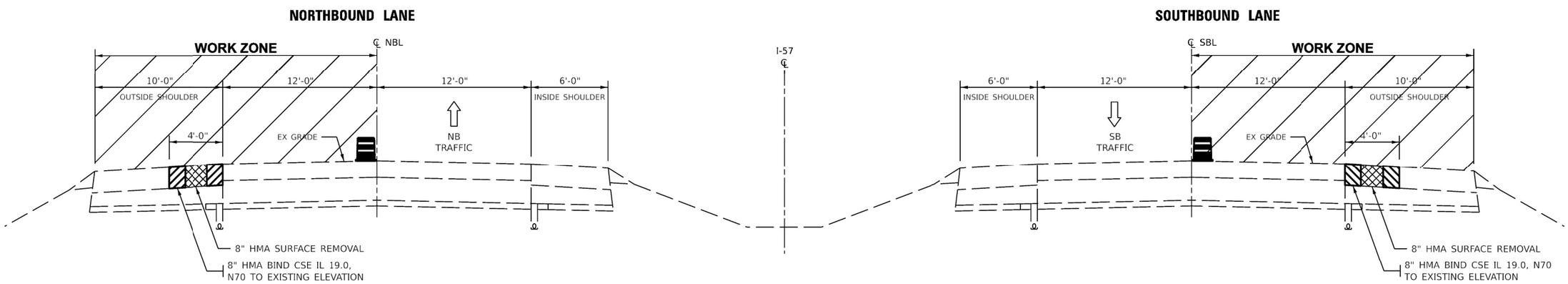


## PRE–STAGE CONFIGURATION

(LOOKING SOUTH)
STA 740+50 TO STA 910+80

MODEL: Default
FILE NAME: pw://ildot-pw.bentley.com:PWIDOT/Documents/IDOT Offices/District 3/ORD Projects/D36SH62/CAD/Data/CADsheets/D36SH62-typicals

| | | | |
|---|---|---|---|
| USER NAME = Joseph.Zagar | DESIGNED - | REVISED - | STATE OF ILLINOIS DEPARTMENT OF TRANSPORTATION |
| | DRAWN - | REVISED - | |
| PLOT SCALE = 100.000 ' / in. | CHECKED - | REVISED - | |
| PLOT DATE = 12/15/2023 | DATE - | REVISED - | |

**PROPOSED I-57 PRE-STAGING TYPICAL SECTIONS**

SCALE: | SHEET 1 OF 6 SHEETS | STA. TO STA

| F.A.I. RTE. | SECTION | COUNTY | TOTAL SHEETS | SHEET NO. |
|---|---|---|---|---|
| 57 | (38-6,38-5)RS,BRR,CLV | IROQUOIS | 213 | 99 |

CONTRACT NO. 66H62

ILLINOIS | FED. AID PROJECT

Long Section Number

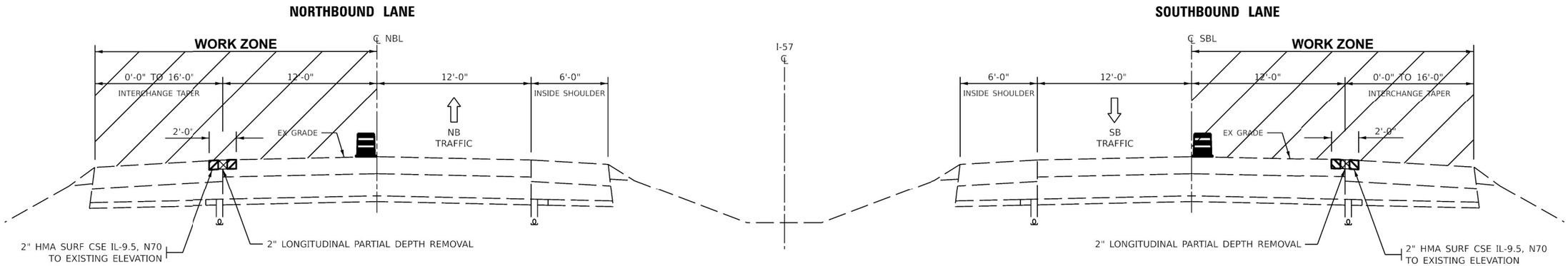


## LONGITUDINAL PARTIAL DEPTH PATCHING

STA 626+00 TO STA 635+40
STA 660+50 TO STA 664+30
STA 777+85 TO STA 787+55
STA 813+80 TO STA 817+65

## PRE–STAGE CONFIGURATION

(LOOKING SOUTH)

## LONGITUDINAL PARTIAL DEPTH PATCHING

STA 630+40 TO STA 634+45
STA 659+15 TO STA 668+55
STA 784+45 TO STA 788+00
STA 812+30 TO STA 822+70

LEGEND

- TRAFFIC CONTROL DRUM
- ① TEMPORARY PAVEMENT MARKING - WHITE
- ② TEMPORARY PAVEMENT MARKING - YELLOW
- WORK COMPLETED IN PREVIOUS STAGE

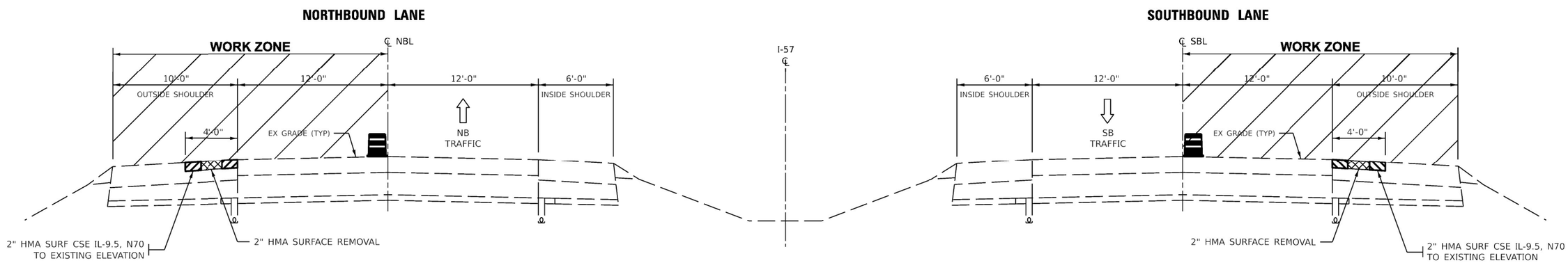


## GORE POINT LONGITUDINAL PARTIAL DEPTH PATCHING

STA 635+40 TO STA 636+70
STA 657+80 TO STA 660+50
STA 787+55 TO STA 789+00
STA 810+98 TO STA 813+80

## PRE–STAGE CONFIGURATION

(LOOKING SOUTH)

## GORE POINT LONGITUDINAL PARTIAL DEPTH PATCHING

STA 634+45 TO STA 636+85
STA 658+00 TO STA 659+15
STA 788+00 TO STA 791+00
STA 811+35 TO STA 812+30

MODEL: Default
FILE NAME: pw://idot-pw.bentley.com:PWIDOT/Documents/IDOT Offices/District 3/ORD Projects/D366H62/CADData/CADsheets/D366H62-typicals

| | | | |
|---|---|---|---|
| USER NAME = Joseph.Zagar | DESIGNED - | REVISED - | STATE OF ILLINOIS DEPARTMENT OF TRANSPORTATION |
| | DRAWN - | REVISED - | |
| PLOT SCALE = 100.000 ' / in. | CHECKED - | REVISED - | |
| PLOT DATE = 12/15/2023 | DATE - | REVISED - | |

**PROPOSED I-57 PRE-STAGING TYPICAL SECTIONS**

SCALE: | SHEET 2 OF 6 SHEETS | STA. TO STA

| F.A.I. RTE. | SECTION | COUNTY | TOTAL SHEETS | SHEET NO. |
|---|---|---|---|---|
| 57 | (38-6,38-5)RS,BRR,CLV | IROQUOIS | 213 | 100 |
| | | CONTRACT NO. 66H62 | | |
| | | ILLINOIS | FED. AID PROJECT | |

Long Section Number

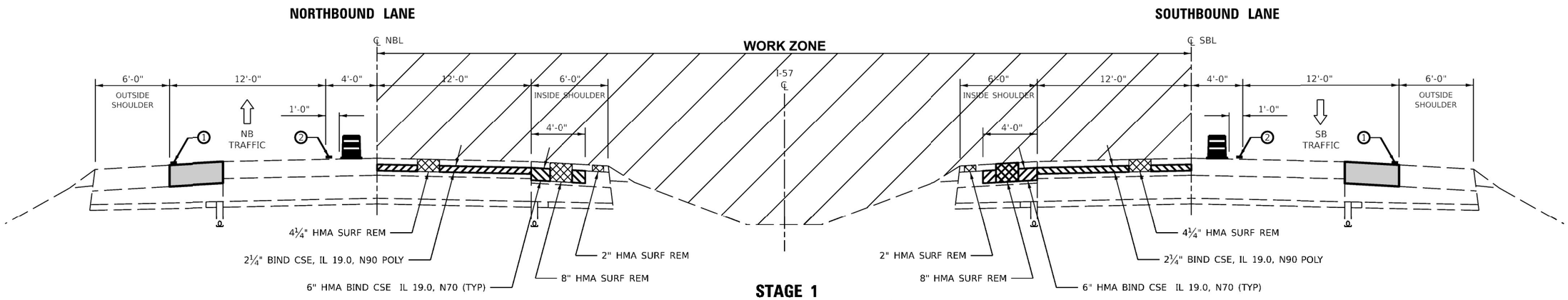


## STAGE 1

(LOOKING SOUTH)
STA 520+00 TO STA 740+50

LEGEND

- TRAFFIC CONTROL DRUM
- ① TEMPORARY PAVEMENT MARKING - WHITE
- ② TEMPORARY PAVEMENT MARKING - YELLOW
- Ⓐ LONGITUDINAL JOINT SEALANT
- Ⓑ LONGITUDINAL JOINT SEALANT HALF WIDTH
- WORK COMPLETED IN PREVIOUS STAGE

### STAGE 1 NOTES:

- IMPROVE INNER 4' OF INSIDE SHOULDER (BINDER) FOR STAGE 2.
- MILL AND RESURFARCE MAINLINE PAVEMENT (PROPOSED BINDER MIXES ONLY).
- MILL MAINTENANCE CROSSOVERS.
- PERFORM SHOULDER WIDENING AND RESURFACING AT MAINTENANCE CROSSOVER.
- PERFORM ANY REQUIRED DRAINAGE WORK.
- APPLY TEMPORARY PAVEMENT MARKING FOR STAGE 2.
- EXPOSURE TO DROP-OFFS SHALL BE RESOLVED PER SPECIAL PROVISIONS. IN ADDITION, ALL DROP-OFFS TO BE RESOLVED BY END OF WORKDAY ON FRIDAY, PRIOR HOLIDAYS AND END OF STAGE 1.
- UTILIZE HWY STNDS 701400 & 701401/701402 FOR STAGE 1 WORKZONE. USE 701411 & 701456 FOR ALL RAMP TRAFFIC CONTROL. SMART TRAFFIC CONTROL TO BE USED FOR ADVANCE SIGNING.

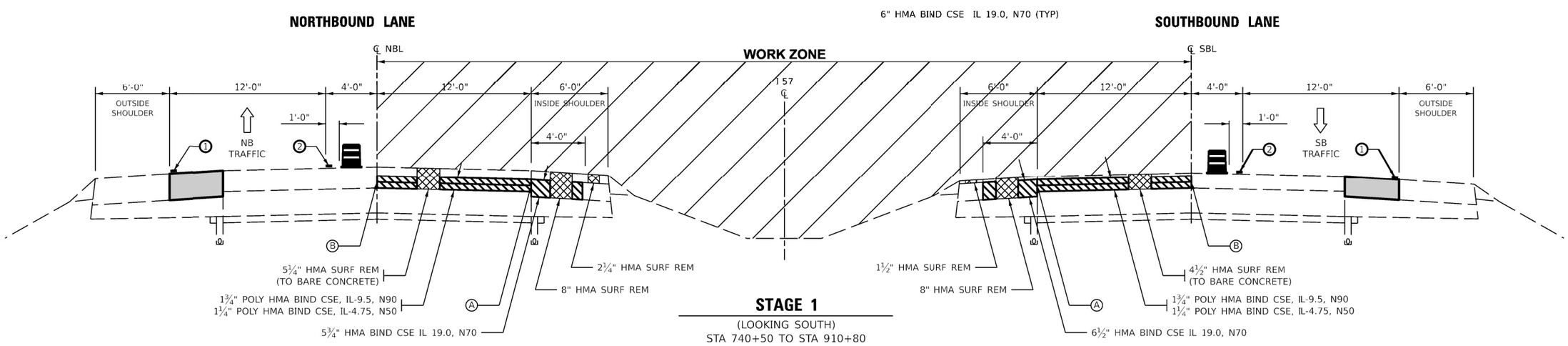


## STAGE 1

(LOOKING SOUTH)
STA 740+50 TO STA 910+80

MODEL: Default
FILE NAME: pw:\\ildot-pw.bentley.com:PWIDOT\Documents\IDOT Offices\District 3\ORD Projects\D368462\CADData\CADsheets\D368H62-typicals

| | | | |
|---|---|---|---|
| USER NAME = Joseph.Zagar | DESIGNED - | REVISED - | STATE OF ILLINOIS DEPARTMENT OF TRANSPORTATION |
| | DRAWN - | REVISED - | |
| PLOT SCALE = 100.000 ' / in. | CHECKED - | REVISED - | |
| PLOT DATE = 12/15/2023 | DATE - | REVISED - | |

**PROPOSED I-57 STAGE 1 TYPICAL SECTIONS**

SCALE: | SHEET 3 OF 6 SHEETS | STA. | TO STA

| F.A.I. RTE. | SECTION | COUNTY | TOTAL SHEETS | SHEET NO. |
|---|---|---|---|---|
| 57 | (38-6,38-5)RS,BRR,CLV | IROQUOIS | 213 | 101 |

CONTRACT NO. 66H62

ILLINOIS | FED. AID PROJECT

Long Section Number

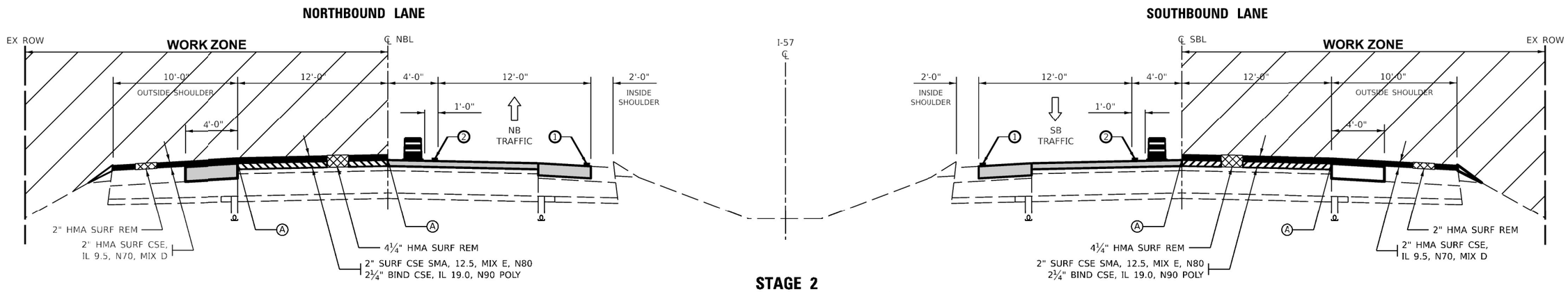


## STAGE 2

(LOOKING SOUTH)
STA 520+00 TO STA 740+50

LEGEND

- TRAFFIC CONTROL DRUM
- ① TEMPORARY PAVEMENT MARKING - WHITE
- ② TEMPORARY PAVEMENT MARKING - YELLOW
- Ⓐ LONGITUDINAL JOINT SEALANT
- Ⓑ LONGITUDINAL JOINT SEALANT HALF WIDTH
- WORK COMPLETED IN PREVIOUS STAGE

## STAGE 2 NOTES:

- PERFORM PROPOSED PATCHING UNDER OVERHEAD STRUCTURES.
- MILL AND RESURFARCE MAINLINE PAVEMENT & SHOULDER. (FINAL GRADE STA 520+00 TO STA 740+50, STA 740+50 TO STA 910+80 BINDER CSE.)
- PERFORM ANY REQUIRED DRAINAGE WORK.
- EXPOSURE TO DROP-OFFS SHALL BE RESOLVED PER SPECIAL PROVISIONS. IN ADDITION, ALL DROP-OFFS TO BE RESOLVED BY END OF WORKDAY ON FRIDAY, PRIOR HOLIDAYS AND END OF STAGE 2.
- UTILIZE HWY STNDS 701400, 701401/701402 & 701406 FOR STAGE 2 WORKZONE. USE 701411 & 701456 FOR ALL RAMP TRAFFIC CONTROL. SMART TRAFFIC CONTROL TO BE USED FOR ADVANCE SIGNING.

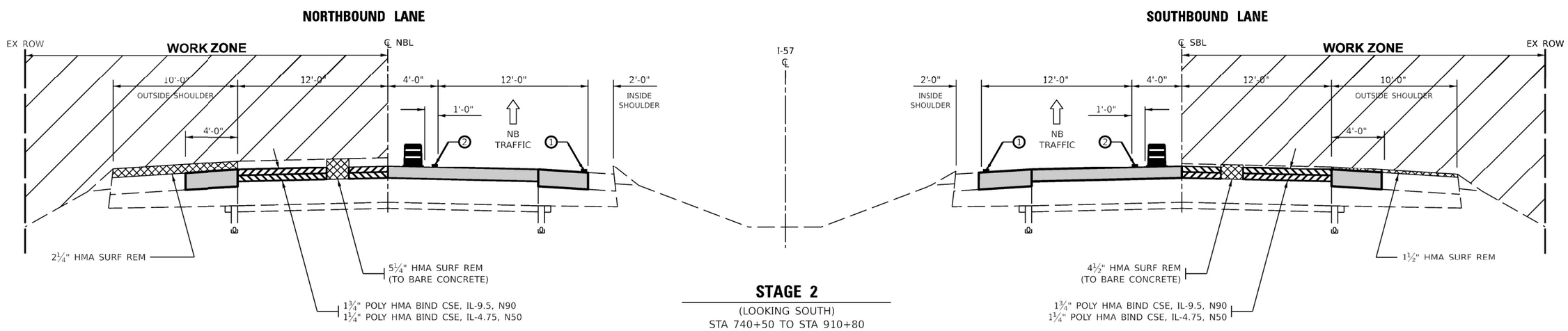


## STAGE 2

(LOOKING SOUTH)
STA 740+50 TO STA 910+80

| | | | |
|---|---|---|---|
| USER NAME = Joseph.Zagar | DESIGNED - | REVISED - | |
| | DRAWN - | REVISED - | |
| PLOT SCALE = 100.000 ' / in. | CHECKED - | REVISED - | |
| PLOT DATE = 12/15/2023 | DATE - | REVISED - | |

**STATE OF ILLINOIS**
**DEPARTMENT OF TRANSPORTATION**

**PROPOSED I-57 STAGE 2 TYPICAL SECTIONS**

SCALE: | SHEET 4 OF 6 SHEETS | STA. | TO STA

| F.A.I. RTE. | SECTION | COUNTY | TOTAL SHEETS | SHEET NO. |
|---|---|---|---|---|
| 57 | (38-6,38-5)RS,BRR,CLV | IROQUOIS | 213 | 102 |

CONTRACT NO. 66H62

ILLINOIS | FED. AID PROJECT

Long Section Number

MODEL: Default
FILE NAME: pw:\\ildot-pw.bentley.com:PWIDOT\Documents\IDOT Offices\District 3\ORD Projects\D368462\CADData\CADsheets\D368H62-typicals

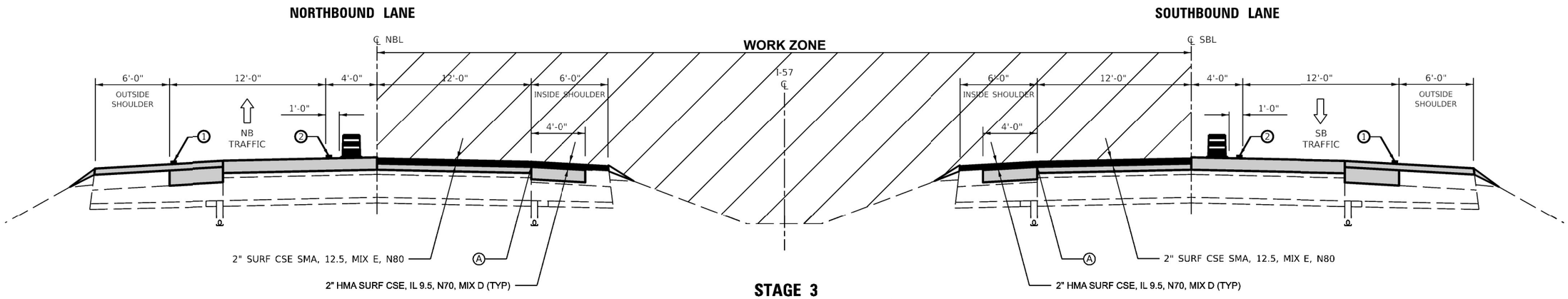


## STAGE 3

(LOOKING SOUTH)
STA 520+00 TO STA 740+50

LEGEND

- TRAFFIC CONTROL DRUM
- (1) TEMPORARY PAVEMENT MARKING - WHITE
- (2) TEMPORARY PAVEMENT MARKING - YELLOW
- (A) LONGITUDINAL JOINT SEALANT
- (B) LONGITUDINAL JOINT SEALANT HALF WIDTH
- WORK COMPLETED IN PREVIOUS STAGE

## STAGE 3 NOTES:

- PERFORM PROPOSED PATCHING UNDER OVERHEAD STRUCTURES.
- IMPROVE ALL INSIDE LANES AND SHOULDER WITH FINAL HMA SURFACE & ADDITONAL MINOR IMPROVEMENTS'
- APPLY BINDER CSE TO MAINTAINENCE CROSSOVERS (FINISH GRADE).
- COMPLETE CONSTRUCTION OF SHOULDER WIDENING & RESURFACING AT MAINTAINENCE CROSSOVER.
- APPLY FINAL PAVEMENT MARKING NOT CONFLICTING WITH STAGE 4.
- EXPOSURE TO DROP-OFFS SHALL BE RESOLVED PER SPECIAL PROVISIONS. IN ADDITION, ALL DROP-OFFS TO BE RESOLVED BY END OF WORKDAY ON FRIDAY, PRIOR HOLIDAYS AND END OF STAGE 3.
- UTILIZE HWY STNDS 701400, 701401/701402 & 701406 FOR STAGE 3 WORKZONE. USE 701411 & 701456 FOR ALL RAMP TRAFFIC CONTROL. SMART TRAFFIC CONTROL TO BE USED FOR ADVANCE SIGNING.

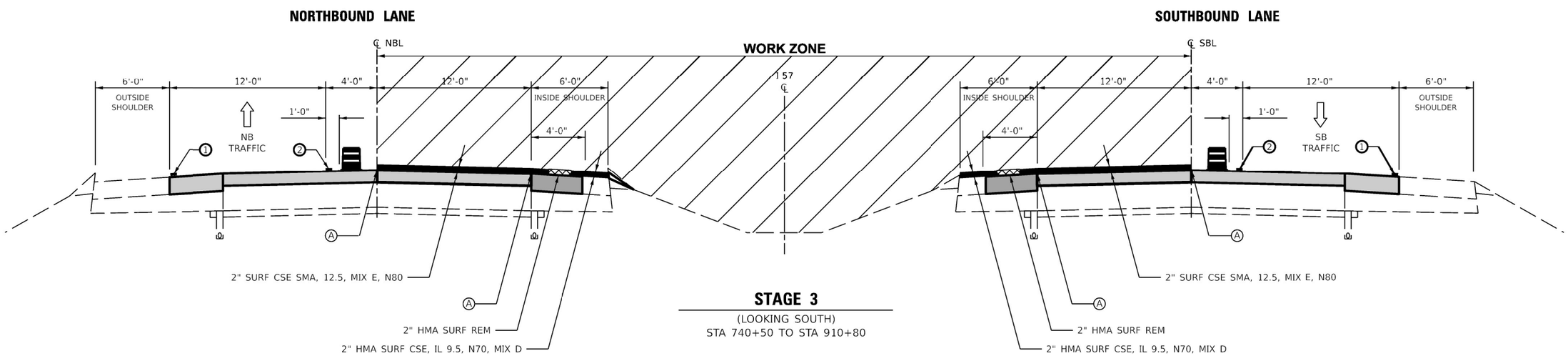


## STAGE 3

(LOOKING SOUTH)
STA 740+50 TO STA 910+80

MODEL: Default
FILE NAME: pw://ildot-pw.bentley.com:PWIDOT/Documents/IDOT Offices/District 3/ORD Projects/D369H62/CAD Data/CADsheets/D369H62-typicals

| | | | |
|---|---|---|---|
| USER NAME = Joseph.Zagar | DESIGNED - | REVISED - | |
| | DRAWN - | REVISED - | |
| PLOT SCALE = 100.000 ' / in. | CHECKED - | REVISED - | |
| PLOT DATE = 12/15/2023 | DATE - | REVISED - | |

**STATE OF ILLINOIS**
**DEPARTMENT OF TRANSPORTATION**

**PROPOSED I-57 STAGE 3 TYPICAL SECTIONS**

SCALE: | SHEET 5 OF 6 SHEETS | STA. | TO STA

| F.A.I. RTE. | SECTION | COUNTY | TOTAL SHEETS | SHEET NO. |
|---|---|---|---|---|
| 57 | (38-6,38-5)RS,BRR,CLV | IROQUOIS | 213 | 103 |

CONTRACT NO. 66H62

ILLINOIS | FED. AID PROJECT

Long Section Number

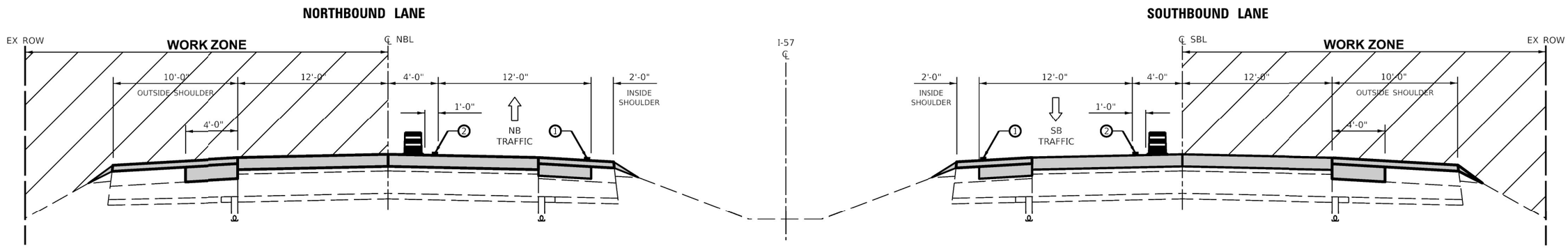


## STAGE 4

(LOOKING SOUTH)
STA 520+00 TO STA 740+50

LEGEND

- TRAFFIC CONTROL DRUM
- ① TEMPORARY PAVEMENT MARKING - WHITE
- ② TEMPORARY PAVEMENT MARKING - YELLOW
- Ⓐ LONGITUDINAL JOINT SEALANT
- Ⓑ LONGITUDINAL JOINT SEALANT HALF WIDTH
- WORK COMPLETED IN PREVIOUS STAGE

### STAGE 4 NOTES:

- •APPLY SURFACE CSE TO OUTSIDE MAINLINE PAVEMENT AND SHOULDERS.
- •UTILIZE HWY STNDS 701400 & 701406 FOR STAGE 4 WORKZONE. USE 701411 & 701456 FOR ALL RAMP TRAFFIC CONTROL. SMART TRAFFIC CONTROL TO BE USED FOR ADVANCE SIGNING.
- •APPLY FINAL REMAINING PAVEMENT MARKINGS TO ML AND RAMPS

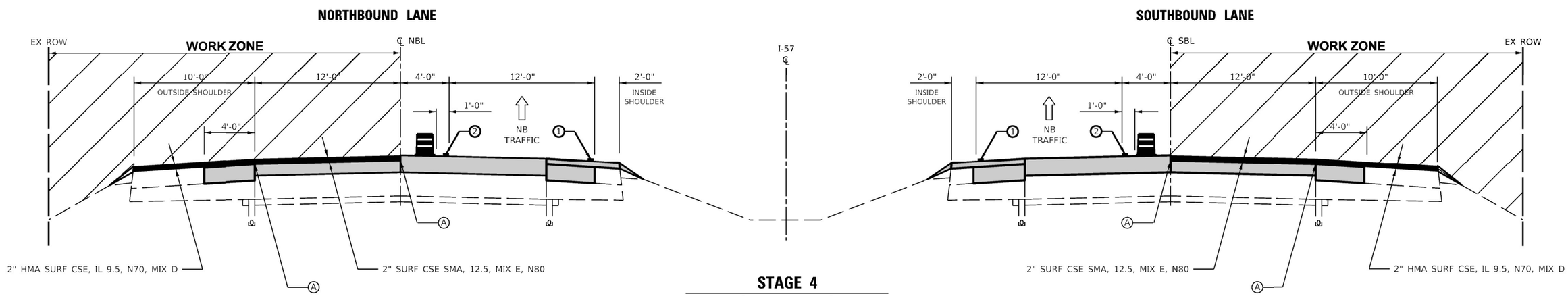


## STAGE 4

(LOOKING SOUTH)
STA 740+50 TO STA 910+80

MODEL: Default
FILE NAME: pw:\\ildot-pw.bentley.com:PWIDOT\Documents\IDOT Offices\District 3\ORD Projects\D368H62\CADData\CADsheets\D368H62-typicals

| | | | |
|---|---|---|---|
| USER NAME = Joseph.Zagar | DESIGNED - | REVISED - | |
| | DRAWN - | REVISED - | |
| PLOT SCALE = 100.000 ' / in. | CHECKED - | REVISED - | |
| PLOT DATE = 12/15/2023 | DATE - | REVISED - | |

**STATE OF ILLINOIS**
**DEPARTMENT OF TRANSPORTATION**

**PROPOSED I-57 STAGE 4 TYPICAL SECTIONS**

SCALE: | SHEET 6 OF 6 SHEETS | STA. | TO STA

| F.A.I. RTE. | SECTION | COUNTY | TOTAL SHEETS | SHEET NO. |
|---|---|---|---|---|
| 57 | (38-6,38-5)RS,BRR,CLV | IROQUOIS | 213 | 104 |

CONTRACT NO. 66H62

ILLINOIS | FED. AID PROJECT

Long Section Number

## LEGEND

- DIRECTION INDICATOR BARRICADE WITH STEADY BURN MONODIRECTIONAL LIGHT
- DRUMS WITH MONO-DIRECTIONAL STEADY BURNING LIGHTS
- DIRECTION OF TRAFFIC
- ARROW BOARD
- ① TEMPORARY PAVEMENT MARKING TYPE III TAPE - WHITE
- ② TEMPORARY PAVEMENT MARKING TYPE III TAPE - YELLOW
- ③ SHORT TERM PAVEMENT MARKING
- Ⓐ EXISTING PAVEMENT MARKING
- WORK ZONE
- SHOULDER IMPROVEMENT IN PREPARATION OF STAGED TRAFFIC & INTERMITTENT PATCHING

NOTES:
ALTERATIONS TO THE TRAFFIC CONTROL PLAN SHALL BE APPROVED BY THE ENGINEER.
USE TRAFFIC CONTROL STANDARDS 701400, 701401 FOR PRE-STAGE WORKZONE. USE 701411 & 701456 FOR ALL RAMPS.
(NOT ALL TRAFFIC CONTROL DEVICES & SIGNING SHOWN) ADJUST RAMP OPENINGS IF REQUIRED.

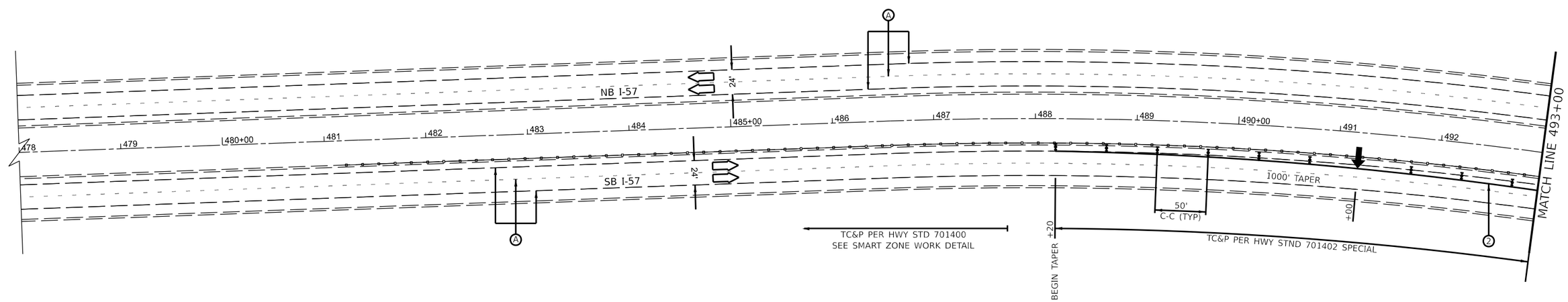


0 50 100 150
SCALE IN FEET

MODEL: Pre-Stage Sheets
FILE NAME: pw://idot-pw.bentley.com:PWIDOT/Documents/IDOT Offices/District 3/ORD Projects/D366H62/CADData/CADsheets/66H62-Plan-PreStage.dgn

| | | | |
|---|---|---|---|
| USER NAME = Joseph.Zagar | DESIGNED - | REVISED - | STATE OF ILLINOIS DEPARTMENT OF TRANSPORTATION |
| | DRAWN - | REVISED - | |
| PLOT SCALE = 100.000 ' / in. | CHECKED - | REVISED - | |
| PLOT DATE = 12/15/2023 | DATE - | REVISED - | |

**PRE-STAGE TRAFFIC CONTROL**

SCALE: | SHEET 1 OF 17 SHEETS | STA. | TO STA.

| F.A.I RTE. | SECTION | COUNTY | TOTAL SHEETS | SHEET NO. |
|---|---|---|---|---|
| 57 | (38-6,38-5)RS,BRR,CLV | IROQUOIS | 213 | 105 |
| | | CONTRACT NO. 66H62 | | |
| | | ILLINOIS FED. AID PROJECT | | |

Long Section Number

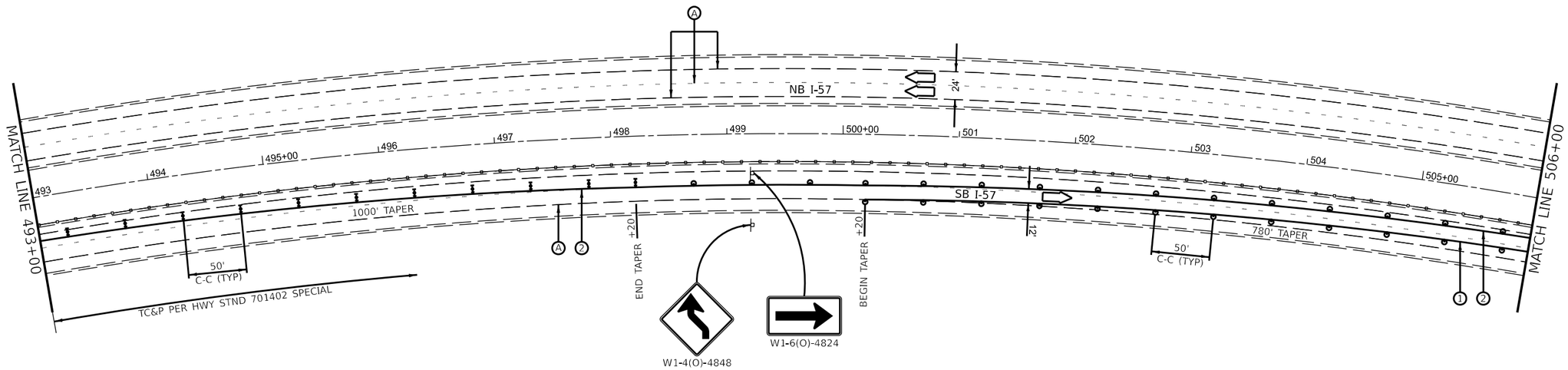


0 50 100 150
SCALE IN FEET

## LEGEND

- DIRECTION INDICATOR BARRICADE WITH STEADY BURN MONODIRECTIONAL LIGHT
- DRUMS WITH MONO-DIRECTIONAL STEADY BURNING LIGHTS
- DIRECTION OF TRAFFIC
- ARROW BOARD
- (1) TEMPORARY PAVEMENT MARKING TYPE III TAPE - WHITE
- (2) TEMPORARY PAVEMENT MARKING TYPE III TAPE - YELLOW
- (3) SHORT TERM PAVEMENT MARKING
- (A) EXISTING PAVEMENT MARKING
- WORK ZONE
- SHOULDER IMPROVEMENT IN PREPARATION OF STAGED TRAFFIC & INTERMITTENT PATCHING

NOTES:
ALTERATIONS TO THE TRAFFIC CONTROL PLAN SHALL BE APPROVED BY THE ENGINEER.
USE TRAFFIC CONTROL STANDARDS 701400, 701401 FOR PRE-STAGE WORKZONE. USE 701411 & 701456 FOR ALL RAMPS.
(NOT ALL TRAFFIC CONTROL DEVICES & SIGNING SHOWN) ADJUST RAMP OPENINGS IF REQUIRED.

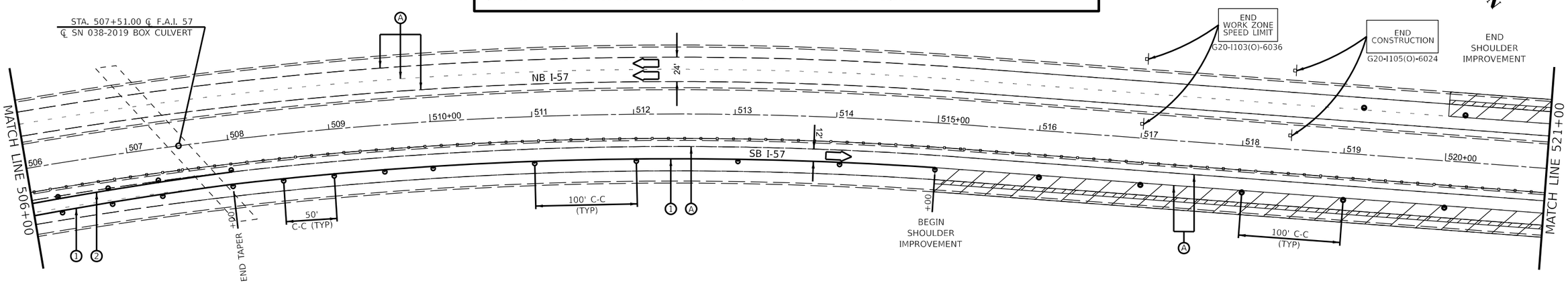


0 50 100 150
SCALE IN FEET

MODEL: Pre-Stage Sheets
FILE NAME: pw://bldoxw.bentley.com:PWIDOT/Documents/IDOT Offices/District 3/ORD Projects/93698H62/CADData/CADsheets/66H62-PreStage.dgn

| | | | |
|---|---|---|---|
| USER NAME = Joseph.Zagar | DESIGNED - | REVISED - | |
| | DRAWN - | REVISED - | |
| PLOT SCALE = 100.000 ' / in. | CHECKED - | REVISED - | |
| PLOT DATE = 12/15/2023 | DATE - | REVISED - | |

**STATE OF ILLINOIS**
**DEPARTMENT OF TRANSPORTATION**

**PRE-STAGE TRAFFIC CONTROL**

SCALE: | SHEET 2 OF 17 SHEETS | STA. | TO STA.

| F.A.I RTE. | SECTION | COUNTY | TOTAL SHEETS | SHEET NO. |
|---|---|---|---|---|
| 57 | (38-6,38-5)RS,BRR,CLV | IROQUOIS | 213 | 106 |

CONTRACT NO. 66H62

ILLINOIS | FED. AID PROJECT

Long Section Number

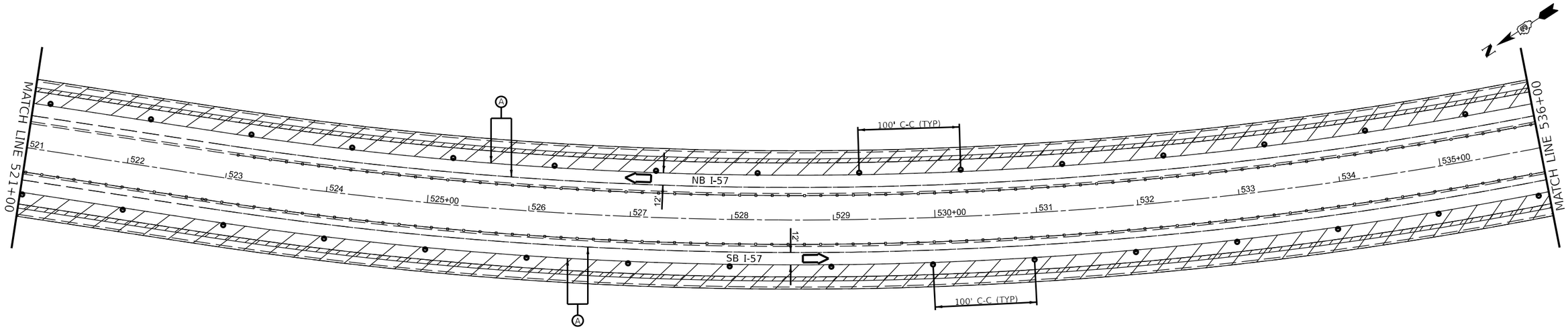


0 50 100 150
SCALE IN FEET

## LEGEND

- DIRECTION INDICATOR BARRICADE WITH STEADY BURN MONODIRECTIONAL LIGHT
- DRUMS WITH MONO-DIRECTIONAL STEADY BURNING LIGHTS
- DIRECTION OF TRAFFIC
- ARROW BOARD
- (1) TEMPORARY PAVEMENT MARKING TYPE III TAPE - WHITE
- (2) TEMPORARY PAVEMENT MARKING TYPE III TAPE - YELLOW
- (3) SHORT TERM PAVEMENT MARKING
- (A) EXISTING PAVEMENT MARKING
- WORK ZONE
- SHOULDER IMPROVEMENT IN PREPARATION OF STAGED TRAFFIC & INTERMITTENT PATCHING

NOTES:
ALTERATIONS TO THE TRAFFIC CONTROL PLAN SHALL BE APPROVED BY THE ENGINEER.
USE TRAFFIC CONTROL STANDARDS 701400, 701401 FOR PRE-STAGE WORKZONE. USE 701411 & 701456 FOR ALL RAMPS.
(NOT ALL TRAFFIC CONTROL DEVICES & SIGNING SHOWN) ADJUST RAMP OPENINGS IF REQUIRED.

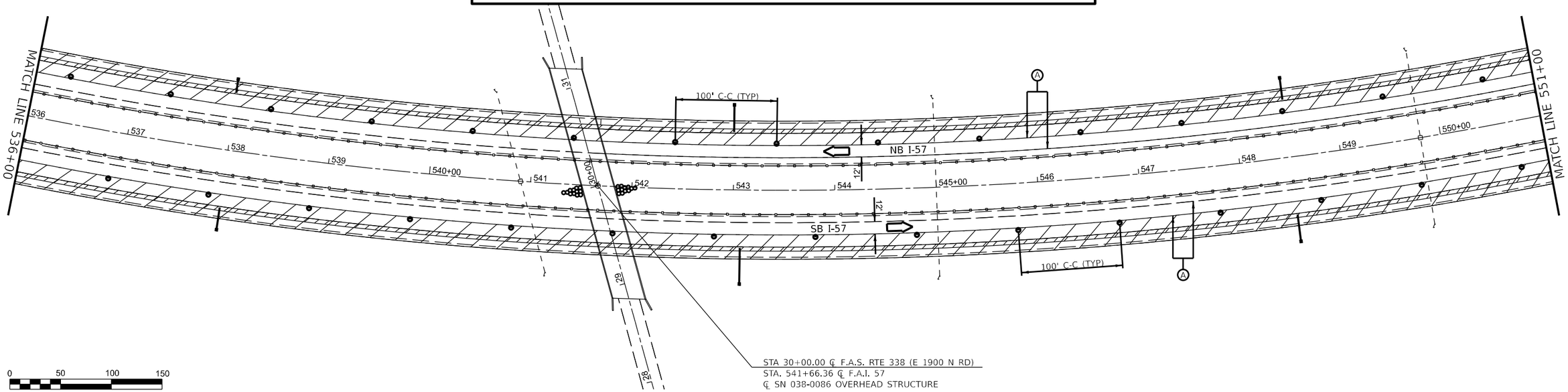


0 50 100 150
SCALE IN FEET

MODEL: Pre-Stage Sheets
FILE NAME: pw://ildotpw.bentley.com:PWDOT/Documents/IDOT Offices/District 3/ORD Projects/D386H62/CADData/CADsheets/66H62-Plan-PreStage.dgn

| | | | |
|---|---|---|---|
| USER NAME = Joseph.Zagar | DESIGNED - | REVISED - | |
| | DRAWN - | REVISED - | |
| PLOT SCALE = 100.000 ' / in. | CHECKED - | REVISED - | |
| PLOT DATE = 12/15/2023 | DATE - | REVISED - | |

**STATE OF ILLINOIS**
**DEPARTMENT OF TRANSPORTATION**

**PRE-STAGE TRAFFIC CONTROL**

SCALE: | SHEET 3 OF 17 SHEETS | STA. | TO STA.

| F.A.I RTE. | SECTION | COUNTY | TOTAL SHEETS | SHEET NO. |
|---|---|---|---|---|
| 57 | (38-6,38-5)RS,BRR,CLV | IROQUOIS | 213 | 107 |

CONTRACT NO. 66H62

ILLINOIS | FED. AID PROJECT

Long Section Number

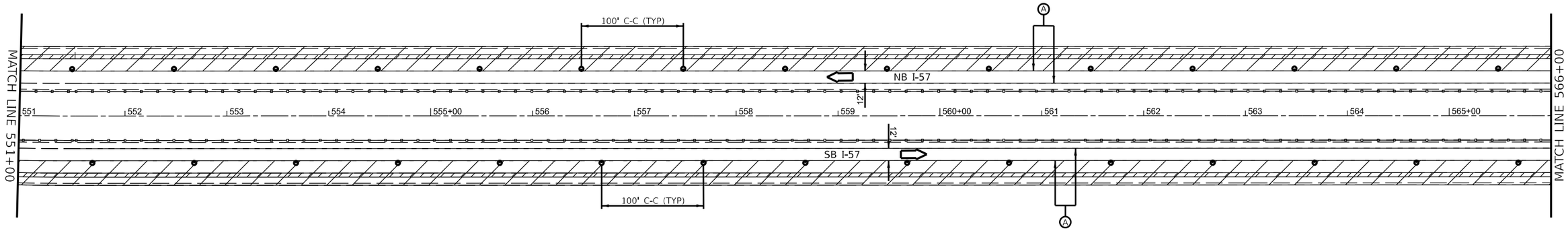


0 50 100 150
SCALE IN FEET

## LEGEND

- DIRECTION INDICATOR BARRICADE WITH STEADY BURN MONODIRECTIONAL LIGHT
- DRUMS WITH MONO-DIRECTIONAL STEADY BURNING LIGHTS
- DIRECTION OF TRAFFIC
- ARROW BOARD
- (1) TEMPORARY PAVEMENT MARKING TYPE III TAPE - WHITE
- (2) TEMPORARY PAVEMENT MARKING TYPE III TAPE - YELLOW
- (3) SHORT TERM PAVEMENT MARKING
- (A) EXISTING PAVEMENT MARKING
- WORK ZONE
- SHOULDER IMPROVEMENT IN PREPARATION OF STAGED TRAFFIC & INTERMITTENT PATCHING

NOTES:
ALTERATIONS TO THE TRAFFIC CONTROL PLAN SHALL BE APPROVED BY THE ENGINEER.
USE TRAFFIC CONTROL STANDARDS 701400, 701401 FOR PRE-STAGE WORKZONE. USE 701411 & 701456 FOR ALL RAMPS.
(NOT ALL TRAFFIC CONTROL DEVICES & SIGNING SHOWN) ADJUST RAMP OPENINGS IF REQUIRED.

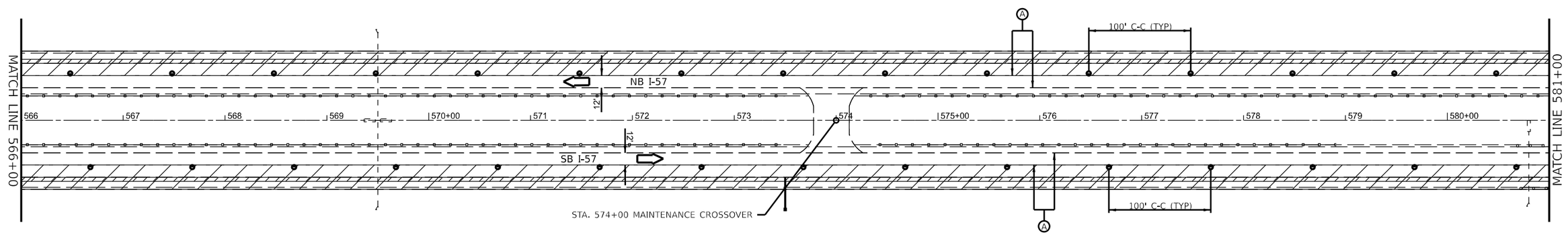


0 50 100 150
SCALE IN FEET

MODEL: Pre-Stage Sheets
FILE NAME: pw:\\ildot-pw.bentley.com:PWIDOT\Documents\IDOT Offices\District 3\ORD Projects\D386H62\CADData\CADsheets\66H62-Plan-PreStage.dgn

| | | | |
|---|---|---|---|
| USER NAME = Joseph.Zagar | DESIGNED - | REVISED - | |
| | DRAWN - | REVISED - | |
| PLOT SCALE = 100.000 ' / in. | CHECKED - | REVISED - | |
| PLOT DATE = 12/15/2023 | DATE - | REVISED - | |

**STATE OF ILLINOIS**
**DEPARTMENT OF TRANSPORTATION**

**PRE-STAGE TRAFFIC CONTROL**

SCALE: SHEET 4 OF 17 SHEETS STA. TO STA.

| F.A.I. RTE. | SECTION | COUNTY | TOTAL SHEETS | SHEET NO. |
|---|---|---|---|---|
| 57 | (38-6,38-5)RS,BRR,CLV | IROQUOIS | 213 | 108 |
| | | CONTRACT NO. 66H62 | | |
| | ILLINOIS | FED. AID PROJECT | | |

Long Section Number

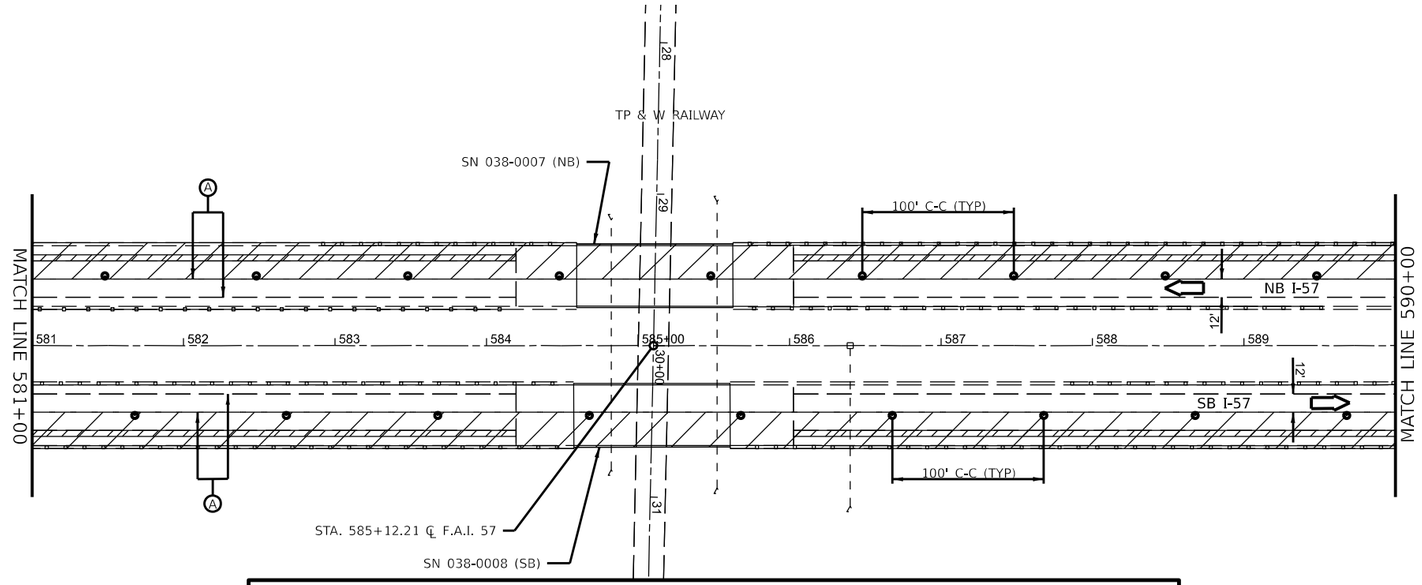


## LEGEND

- DIRECTION INDICATOR BARRICADE WITH STEADY BURN MONODIRECTIONAL LIGHT
- DRUMS WITH MONO-DIRECTIONAL STEADY BURNING LIGHTS
- DIRECTION OF TRAFFIC
- ARROW BOARD
- (1) TEMPORARY PAVEMENT MARKING TYPE III TAPE - WHITE
- (2) TEMPORARY PAVEMENT MARKING TYPE III TAPE - YELLOW
- (3) SHORT TERM PAVEMENT MARKING
- (A) EXISTING PAVEMENT MARKING
- WORK ZONE
- SHOULDER IMPROVEMENT IN PREPARATION OF STAGED TRAFFIC & INTERMITTENT PATCHING

NOTES:
ALTERATIONS TO THE TRAFFIC CONTROL PLAN SHALL BE APPROVED BY THE ENGINEER.
USE TRAFFIC CONTROL STANDARDS 701400, 701401 FOR PRE-STAGE WORKZONE. USE 701411 & 701456 FOR ALL RAMPS.
(NOT ALL TRAFFIC CONTROL DEVICES & SIGNING SHOWN) ADJUST RAMP OPENINGS IF REQUIRED.

0 50 100 150
SCALE IN FEET

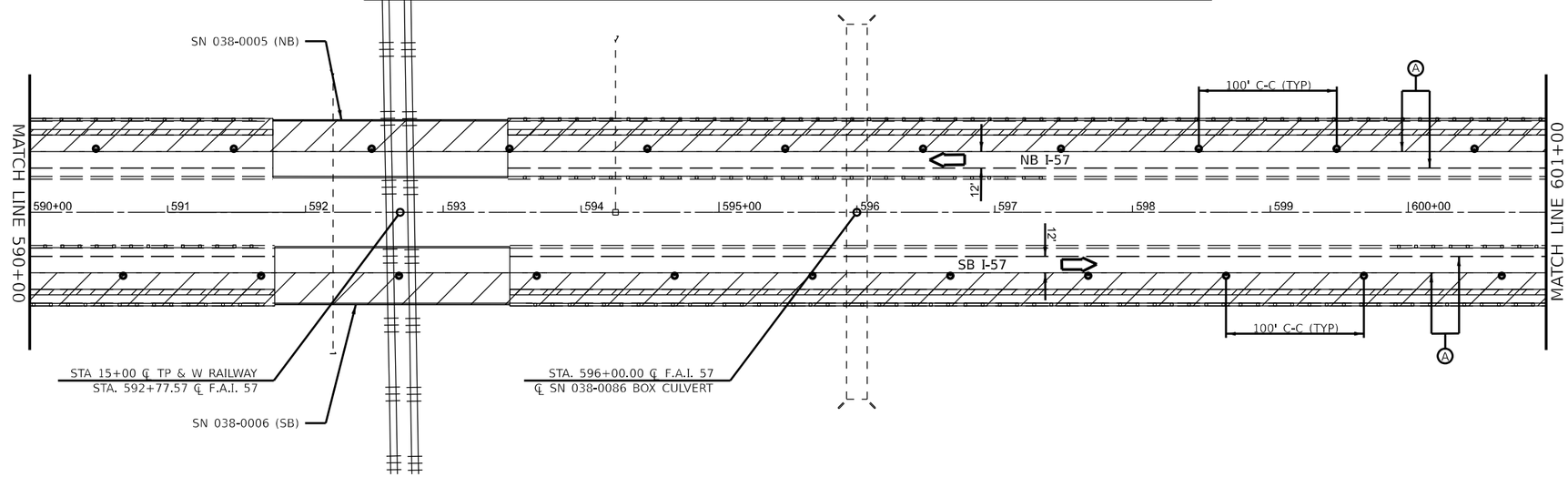


0 50 100 150
SCALE IN FEET

MODEL: Pre-Stage Sheets
FILE NAME: pw://ildot-pw.bentley.com:PWDOT/Documents/IDOT Offices/District 3/ORD Projects/D386H62/CADData/CADsheets/66H62-Plan-PreStage.dgn

| | | | |
|---|---|---|---|
| USER NAME = Joseph.Zagar | DESIGNED - | REVISED - | |
| | DRAWN - | REVISED - | |
| PLOT SCALE = 100,000 ' / in. | CHECKED - | REVISED - | |
| PLOT DATE = 12/15/2023 | DATE - | REVISED - | |

**STATE OF ILLINOIS**
**DEPARTMENT OF TRANSPORTATION**

**PRE-STAGE TRAFFIC CONTROL**

SCALE: | SHEET 5 OF 17 SHEETS | STA. | TO STA.

| F.A.I. RTE. | SECTION | COUNTY | TOTAL SHEETS | SHEET NO. |
|---|---|---|---|---|
| 57 | (38-6,38-5)RS,BRR,CLV | IROQUOIS | 213 | 109 |
| | | CONTRACT NO. 66H62 | | |
| | ILLINOIS | FED. AID PROJECT | | |

Long Section Number

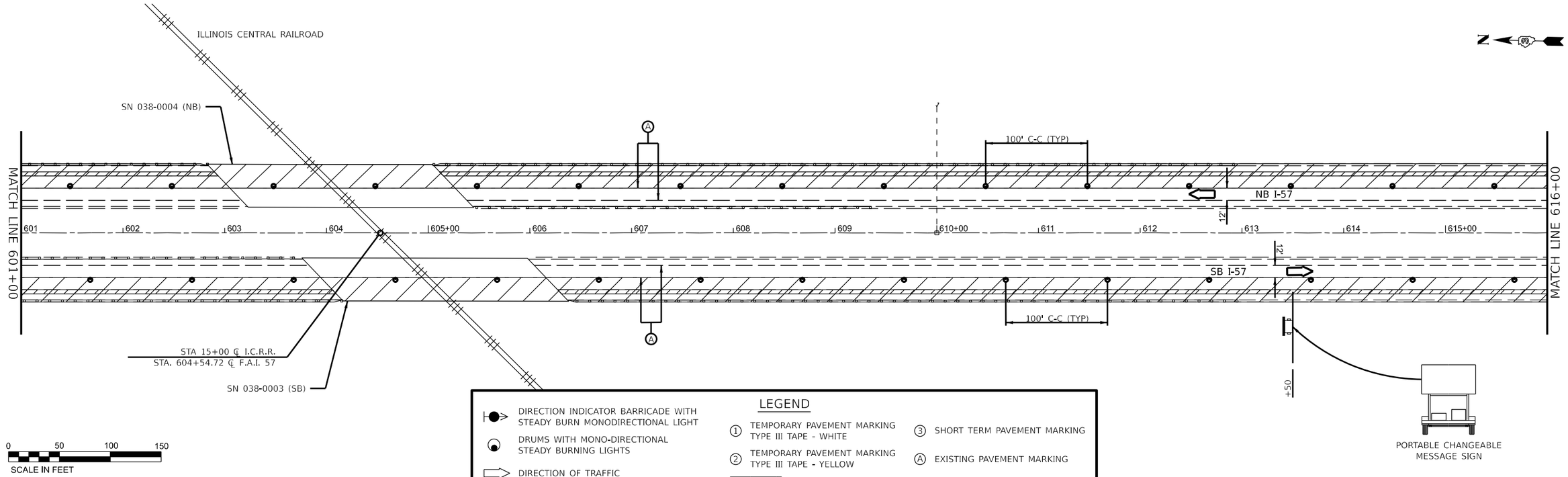


## LEGEND

- DIRECTION INDICATOR BARRICADE WITH STEADY BURN MONODIRECTIONAL LIGHT
- DRUMS WITH MONO-DIRECTIONAL STEADY BURNING LIGHTS
- DIRECTION OF TRAFFIC
- ARROW BOARD
- (1) TEMPORARY PAVEMENT MARKING TYPE III TAPE - WHITE
- (2) TEMPORARY PAVEMENT MARKING TYPE III TAPE - YELLOW
- (3) SHORT TERM PAVEMENT MARKING
- (A) EXISTING PAVEMENT MARKING
- WORK ZONE
- SHOULDER IMPROVEMENT IN PREPARATION OF STAGED TRAFFIC & INTERMITTENT PATCHING

NOTES:
ALTERATIONS TO THE TRAFFIC CONTROL PLAN SHALL BE APPROVED BY THE ENGINEER.
USE TRAFFIC CONTROL STANDARDS 701400, 701401 FOR PRE-STAGE WORKZONE. USE 701411 & 701456 FOR ALL RAMPS.
(NOT ALL TRAFFIC CONTROL DEVICES & SIGNING SHOWN) ADJUST RAMP OPENINGS IF REQUIRED.

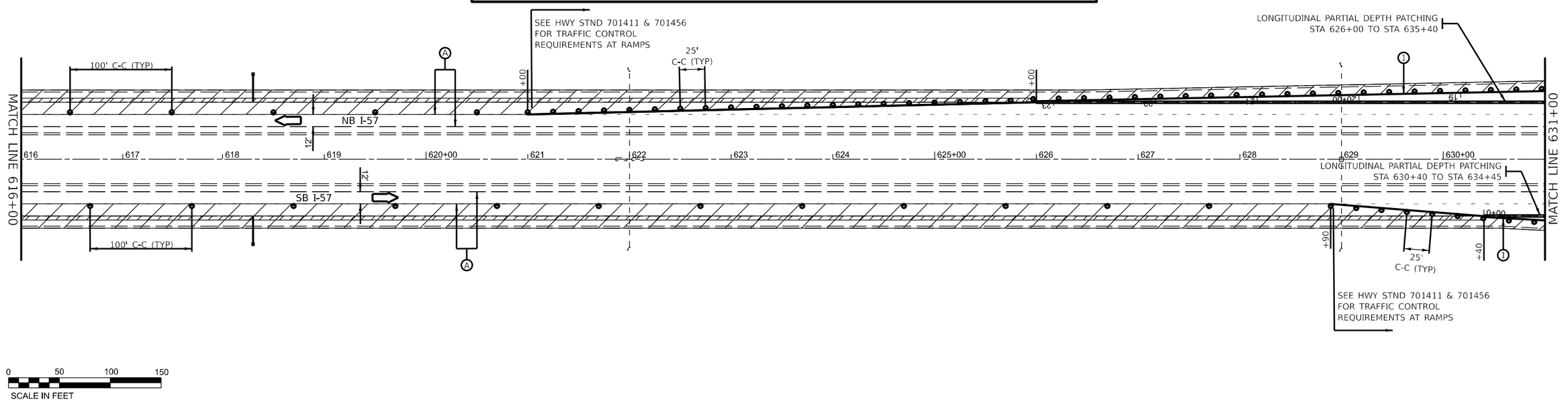


| | | | |
|---|---|---|---|
| USER NAME = Joseph.Zagar | DESIGNED - | REVISED - | |
| | DRAWN - | REVISED - | |
| PLOT SCALE = 100,000 ' / in. | CHECKED - | REVISED - | |
| PLOT DATE = 12/15/2023 | DATE - | REVISED - | |

**STATE OF ILLINOIS**
**DEPARTMENT OF TRANSPORTATION**

**PRE-STAGE TRAFFIC CONTROL**

SCALE: | SHEET 6 OF 17 SHEETS | STA. | TO STA.

| F.A.I. RTE. | SECTION | COUNTY | TOTAL SHEETS | SHEET NO. |
|---|---|---|---|---|
| 57 | (38-6,38-5)RS,BRR,CLV | IROQUOIS | 213 | 110 |
| | | CONTRACT NO. 66H62 | | |
| | ILLINOIS | FED. AID PROJECT | | |

Long Section Number

MODEL: Pre-Stage Sheets
FILE NAME: pw://ildot-pw.bentley.com:PWIDOT/Documents/IDOT Offices/District 3/ORD Projects/D386H62/CADData/CADsheets/66H62-Plan-PreStage.dgn

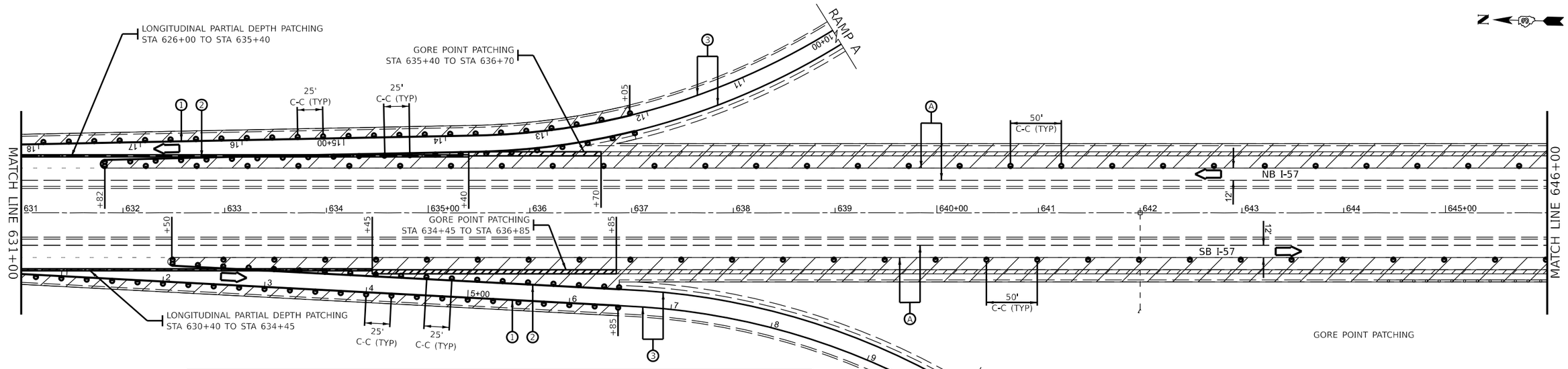


0 50 100 150
SCALE IN FEET

## LEGEND

- DIRECTION INDICATOR BARRICADE WITH STEADY BURN MONODIRECTIONAL LIGHT
- DRUMS WITH MONO-DIRECTIONAL STEADY BURNING LIGHTS
- DIRECTION OF TRAFFIC
- ARROW BOARD
- (1) TEMPORARY PAVEMENT MARKING TYPE III TAPE - WHITE
- (2) TEMPORARY PAVEMENT MARKING TYPE III TAPE - YELLOW
- (3) SHORT TERM PAVEMENT MARKING
- (A) EXISTING PAVEMENT MARKING
- WORK ZONE
- SHOULDER IMPROVEMENT IN PREPARATION OF STAGED TRAFFIC & INTERMITTENT PATCHING

NOTES:
ALTERATIONS TO THE TRAFFIC CONTROL PLAN SHALL BE APPROVED BY THE ENGINEER.
USE TRAFFIC CONTROL STANDARDS 701400, 701401 FOR PRE-STAGE WORKZONE. USE 701411 & 701456 FOR ALL RAMPS.
(NOT ALL TRAFFIC CONTROL DEVICES & SIGNING SHOWN) ADJUST RAMP OPENINGS IF REQUIRED.

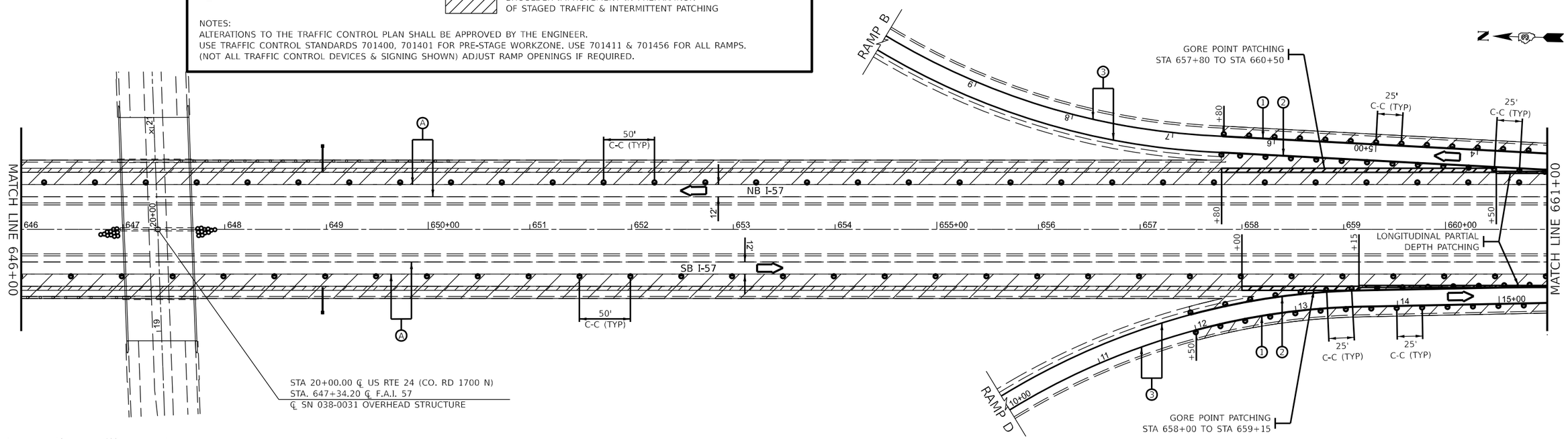


0 50 100 150
SCALE IN FEET

MODEL: Pre-Stage Sheets
FILE NAME: pw://ildot-pw.bentley.com:PWIDOT/Documents/IDOT Offices/District 3/ORD Projects/D386H62/CADData/CADsheets/66H62-Plan-PreStage.dgn

| | | | |
|---|---|---|---|
| USER NAME = Joseph.Zagar | DESIGNED - | REVISED - | |
| | DRAWN - | REVISED - | |
| PLOT SCALE = 100.000 ' / in. | CHECKED - | REVISED - | |
| PLOT DATE = 12/15/2023 | DATE - | REVISED - | |

**STATE OF ILLINOIS**
**DEPARTMENT OF TRANSPORTATION**

**PRE-STAGE TRAFFIC CONTROL**

SCALE: | SHEET 7 OF 17 SHEETS | STA. | TO STA.

| F.A.I. RTE. | SECTION | COUNTY | TOTAL SHEETS | SHEET NO. |
|---|---|---|---|---|
| 57 | (38-6,38-5)RS,BRR,CLV | IROQUOIS | 213 | 111 |
| | | CONTRACT NO. 66H62 | | |
| | ILLINOIS | FED. AID PROJECT | | |

Long Section Number

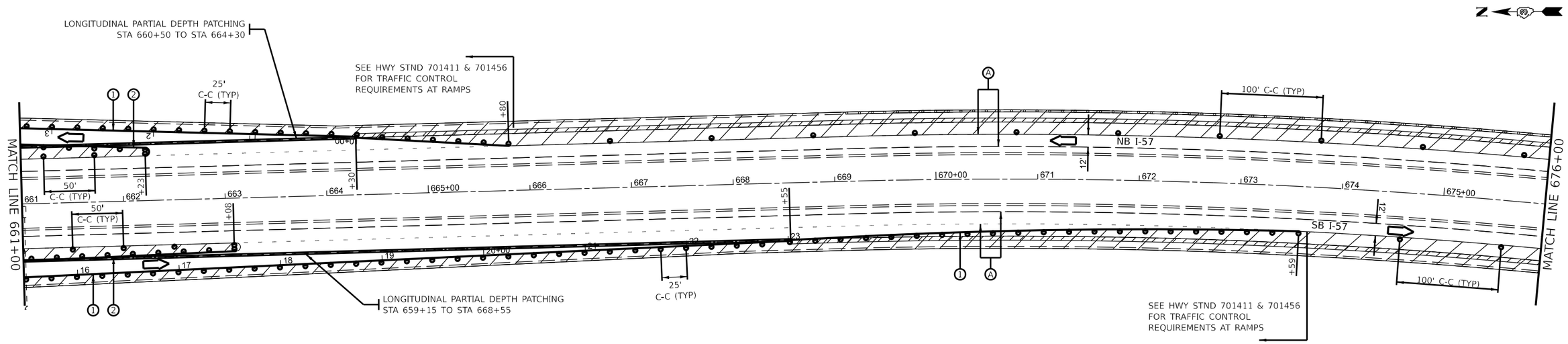


0 50 100 150
SCALE IN FEET

## LEGEND

- DIRECTION INDICATOR BARRICADE WITH STEADY BURN MONODIRECTIONAL LIGHT
- DRUMS WITH MONO-DIRECTIONAL STEADY BURNING LIGHTS
- DIRECTION OF TRAFFIC
- ARROW BOARD
- (1) TEMPORARY PAVEMENT MARKING TYPE III TAPE - WHITE
- (2) TEMPORARY PAVEMENT MARKING TYPE III TAPE - YELLOW
- (3) SHORT TERM PAVEMENT MARKING
- (A) EXISTING PAVEMENT MARKING
- WORK ZONE
- SHOULDER IMPROVEMENT IN PREPARATION OF STAGED TRAFFIC & INTERMITTENT PATCHING

NOTES:
ALTERATIONS TO THE TRAFFIC CONTROL PLAN SHALL BE APPROVED BY THE ENGINEER.
USE TRAFFIC CONTROL STANDARDS 701400, 701401 FOR PRE-STAGE WORKZONE. USE 701411 & 701456 FOR ALL RAMPS.
(NOT ALL TRAFFIC CONTROL DEVICES & SIGNING SHOWN) ADJUST RAMP OPENINGS IF REQUIRED.

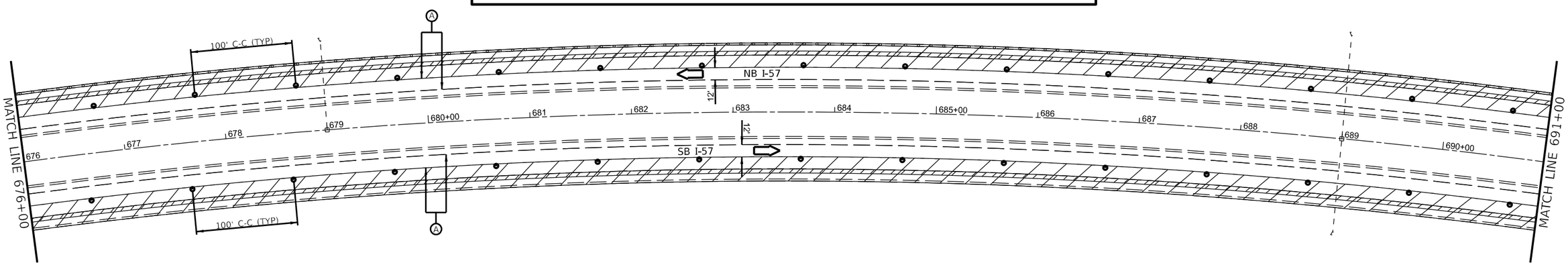


0 50 100 150
SCALE IN FEET

MODEL: Pre-Stage Sheets
FILE NAME: pw://ildcpw.bentley.com:PWDOT/Documents/IDOT Offices/District 3/ORD Projects/D386H62/CADData/CADsheets/66H62-Plan-PreStage.dgn

| | | | |
|---|---|---|---|
| USER NAME = Joseph.Zagar | DESIGNED - | REVISED - | |
| | DRAWN - | REVISED - | |
| PLOT SCALE = 100,000 ' / in. | CHECKED - | REVISED - | |
| PLOT DATE = 12/15/2023 | DATE - | REVISED - | |

**STATE OF ILLINOIS**
**DEPARTMENT OF TRANSPORTATION**

**PRE-STAGE TRAFFIC CONTROL**

SCALE: | SHEET 8 OF 17 SHEETS | STA. TO STA.

| F.A.I. RTE. | SECTION | COUNTY | TOTAL SHEETS | SHEET NO. |
|---|---|---|---|---|
| 57 | (38-6,38-5)RS,BRR,CLV | IROQUOIS | 213 | 112 |
| | | CONTRACT NO. 66H62 | | |
| | ILLINOIS | FED. AID PROJECT | | |

Long Section Number

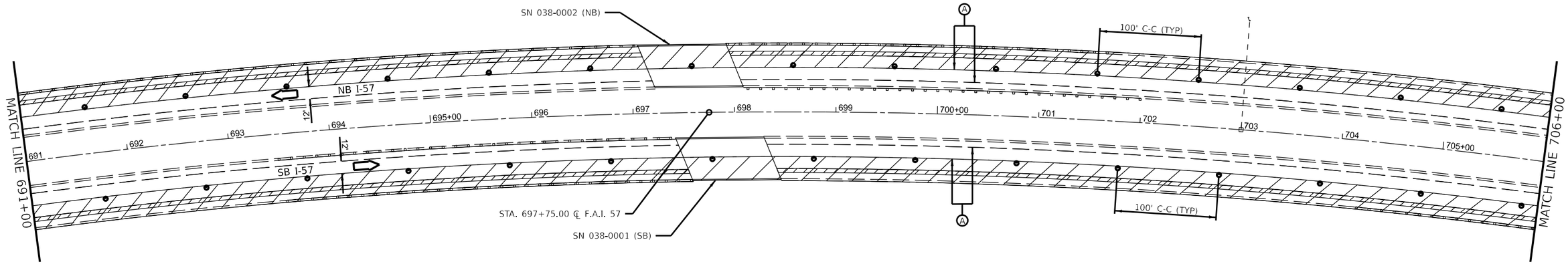


0 50 100 150
SCALE IN FEET

## LEGEND

- DIRECTION INDICATOR BARRICADE WITH STEADY BURN MONODIRECTIONAL LIGHT
- DRUMS WITH MONO-DIRECTIONAL STEADY BURNING LIGHTS
- DIRECTION OF TRAFFIC
- ARROW BOARD
- (1) TEMPORARY PAVEMENT MARKING TYPE III TAPE - WHITE
- (2) TEMPORARY PAVEMENT MARKING TYPE III TAPE - YELLOW
- (3) SHORT TERM PAVEMENT MARKING
- (A) EXISTING PAVEMENT MARKING
- WORK ZONE
- SHOULDER IMPROVEMENT IN PREPARATION OF STAGED TRAFFIC & INTERMITTENT PATCHING

NOTES:
ALTERATIONS TO THE TRAFFIC CONTROL PLAN SHALL BE APPROVED BY THE ENGINEER.
USE TRAFFIC CONTROL STANDARDS 701400, 701401 FOR PRE-STAGE WORKZONE. USE 701411 & 701456 FOR ALL RAMPS.
(NOT ALL TRAFFIC CONTROL DEVICES & SIGNING SHOWN) ADJUST RAMP OPENINGS IF REQUIRED.

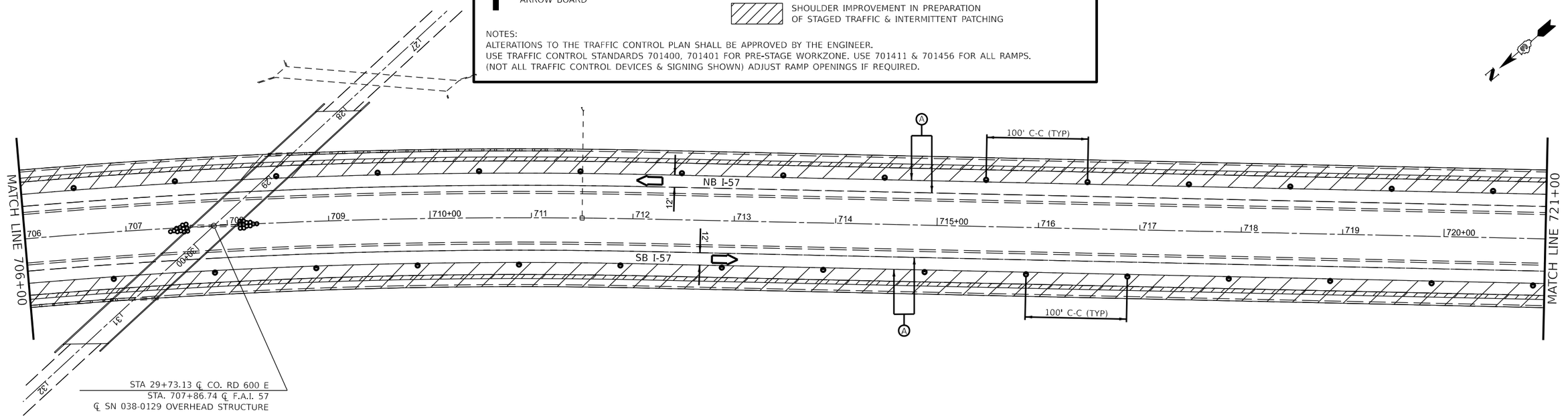


0 50 100 150
SCALE IN FEET

MODEL: Pre-Stage Sheets
FILE NAME: pw://ildot-pw.bentley.com:PWIDOT/Documents/IDOT Offices/District 5/ORD Projects/D368H62/CADData/CADsheets/66H62-PreStage.dgn

| | | | |
|---|---|---|---|
| USER NAME = Joseph.Zagar | DESIGNED - | REVISED - | |
| | DRAWN - | REVISED - | |
| PLOT SCALE = 100.000 ' / in. | CHECKED - | REVISED - | |
| PLOT DATE = 12/15/2023 | DATE - | REVISED - | |

**STATE OF ILLINOIS**
**DEPARTMENT OF TRANSPORTATION**

**PRE-STAGE TRAFFIC CONTROL**

SCALE: | SHEET 9 OF 17 SHEETS | STA. | TO STA.

| F.A.I. RTE. | SECTION | COUNTY | TOTAL SHEETS | SHEET NO. |
|---|---|---|---|---|
| 57 | (38-6,38-5)RS,BRR,CLV | IROQUOIS | 213 | 113 |
| | | CONTRACT NO. 66H62 | | |
| | ILLINOIS | FED. AID PROJECT | | |

Long Section Number

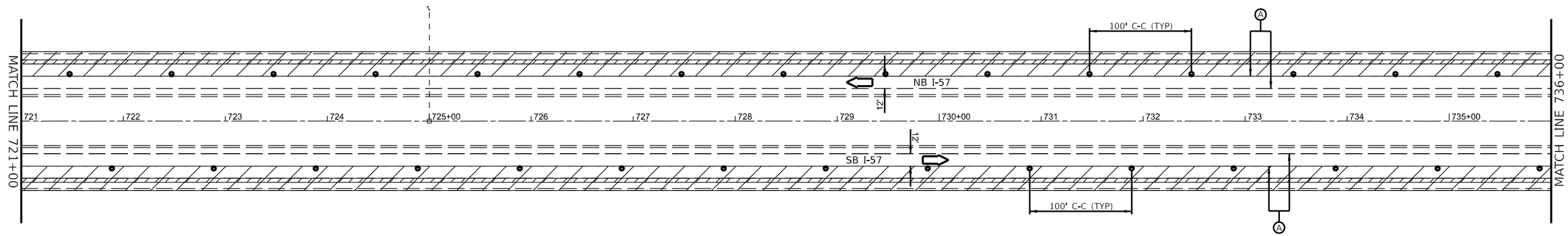


0 50 100 150
SCALE IN FEET

## LEGEND

- DIRECTION INDICATOR BARRICADE WITH STEADY BURN MONODIRECTIONAL LIGHT
- DRUMS WITH MONO-DIRECTIONAL STEADY BURNING LIGHTS
- DIRECTION OF TRAFFIC
- ARROW BOARD
- (1) TEMPORARY PAVEMENT MARKING TYPE III TAPE - WHITE
- (2) TEMPORARY PAVEMENT MARKING TYPE III TAPE - YELLOW
- (3) SHORT TERM PAVEMENT MARKING
- (A) EXISTING PAVEMENT MARKING
- WORK ZONE
- SHOULDER IMPROVEMENT IN PREPARATION OF STAGED TRAFFIC & INTERMITTENT PATCHING

NOTES:
ALTERATIONS TO THE TRAFFIC CONTROL PLAN SHALL BE APPROVED BY THE ENGINEER.
USE TRAFFIC CONTROL STANDARDS 701400, 701401 FOR PRE-STAGE WORKZONE. USE 701411 & 701456 FOR ALL RAMPS.
(NOT ALL TRAFFIC CONTROL DEVICES & SIGNING SHOWN) ADJUST RAMP OPENINGS IF REQUIRED.

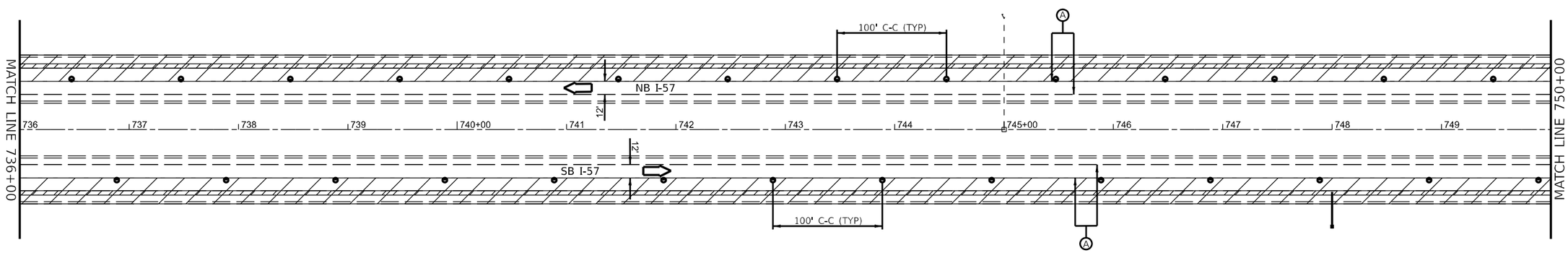


0 50 100 150
SCALE IN FEET

MODEL: Pre-Stage Sheets
FILE NAME: pw://illinois.bentley.com:PWIDOT/Documents/IDOT Offices/District 3/ORD Projects/D369H62/CADData/CADsheets/69H62-PlanPreStage.dgn

| | | | |
|---|---|---|---|
| USER NAME = Joseph.Zagar | DESIGNED - | REVISED - | |
| | DRAWN - | REVISED - | |
| PLOT SCALE = 100.000 ' / in. | CHECKED - | REVISED - | |
| PLOT DATE = 12/15/2023 | DATE - | REVISED - | |

**STATE OF ILLINOIS**
**DEPARTMENT OF TRANSPORTATION**

**PRE-STAGE TRAFFIC CONTROL**

SCALE: | SHEET 10 OF 17 SHEETS | STA. | TO STA.

| F.A.I. RTE. | SECTION | COUNTY | TOTAL SHEETS | SHEET NO. |
|---|---|---|---|---|
| 57 | (38-6,38-5)RS,BRR,CLV | IROQUOIS | 213 | 114 |

CONTRACT NO. 66H62

ILLINOIS | FED. AID PROJECT

Long Section Number

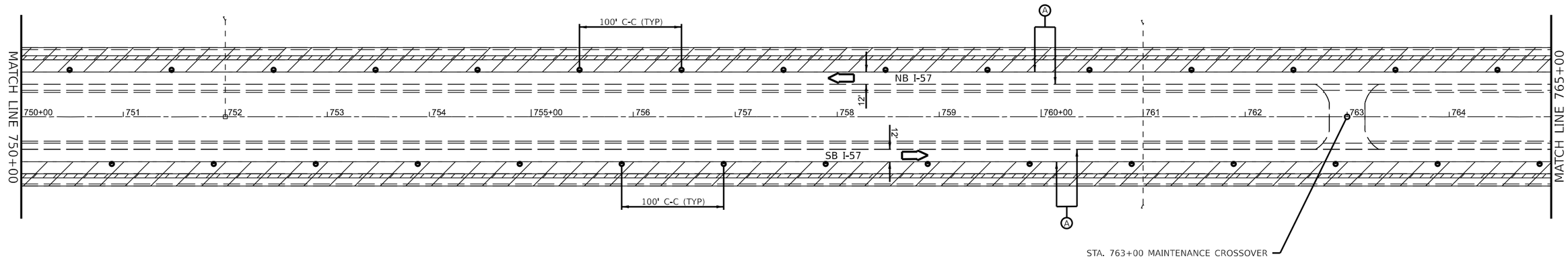


0 50 100 150
SCALE IN FEET

## LEGEND

- DIRECTION INDICATOR BARRICADE WITH STEADY BURN MONODIRECTIONAL LIGHT
- DRUMS WITH MONO-DIRECTIONAL STEADY BURNING LIGHTS
- DIRECTION OF TRAFFIC
- ARROW BOARD
- (1) TEMPORARY PAVEMENT MARKING TYPE III TAPE - WHITE
- (2) TEMPORARY PAVEMENT MARKING TYPE III TAPE - YELLOW
- (3) SHORT TERM PAVEMENT MARKING
- (A) EXISTING PAVEMENT MARKING
- WORK ZONE
- SHOULDER IMPROVEMENT IN PREPARATION OF STAGED TRAFFIC & INTERMITTENT PATCHING

NOTES:
ALTERATIONS TO THE TRAFFIC CONTROL PLAN SHALL BE APPROVED BY THE ENGINEER.
USE TRAFFIC CONTROL STANDARDS 701400, 701401 FOR PRE-STAGE WORKZONE. USE 701411 & 701456 FOR ALL RAMPS.
(NOT ALL TRAFFIC CONTROL DEVICES & SIGNING SHOWN) ADJUST RAMP OPENINGS IF REQUIRED.

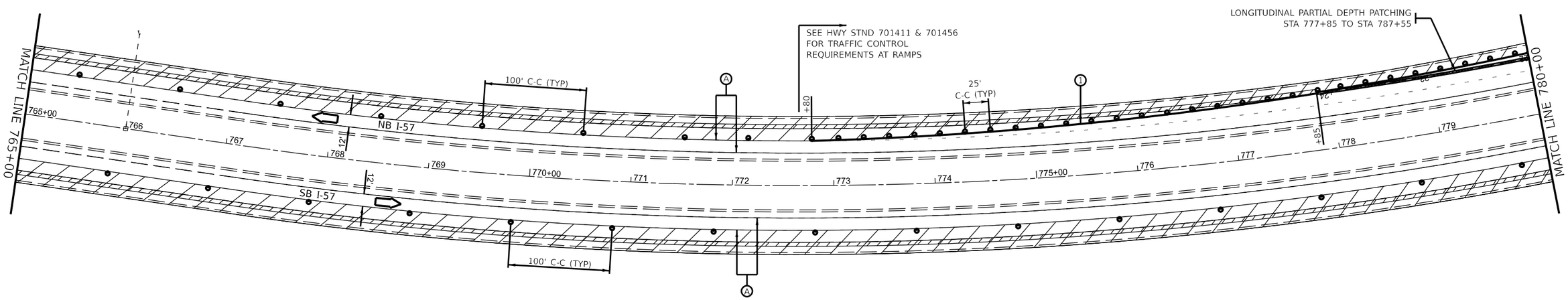


0 50 100 150
SCALE IN FEET

MODEL: Pre-Stage Sheets
FILE NAME: pw://bbow.bentley.com:PWIDOT/Documents/IDOT Offices/District 3/ORD Projects/D398482/CADData/CADSheets/66H62-Pre-PreStage.dgn

| | | | |
|---|---|---|---|
| USER NAME = Joseph.Zagar | DESIGNED - | REVISED - | |
| | DRAWN - | REVISED - | |
| PLOT SCALE = 100,000 ' / in. | CHECKED - | REVISED - | |
| PLOT DATE = 12/15/2023 | DATE - | REVISED - | |

**STATE OF ILLINOIS**
**DEPARTMENT OF TRANSPORTATION**

**PRE-STAGE TRAFFIC CONTROL**

SCALE: SHEET 11 OF 17 SHEETS STA. TO STA.

| F.A.I. RTE. | SECTION | COUNTY | TOTAL SHEETS | SHEET NO. |
|---|---|---|---|---|
| 57 | (38-6,38-5)RS,BRR,CLV | IROQUOIS | 213 | 115 |

CONTRACT NO. 66H62
ILLINOIS FED. AID PROJECT

Long Section Number

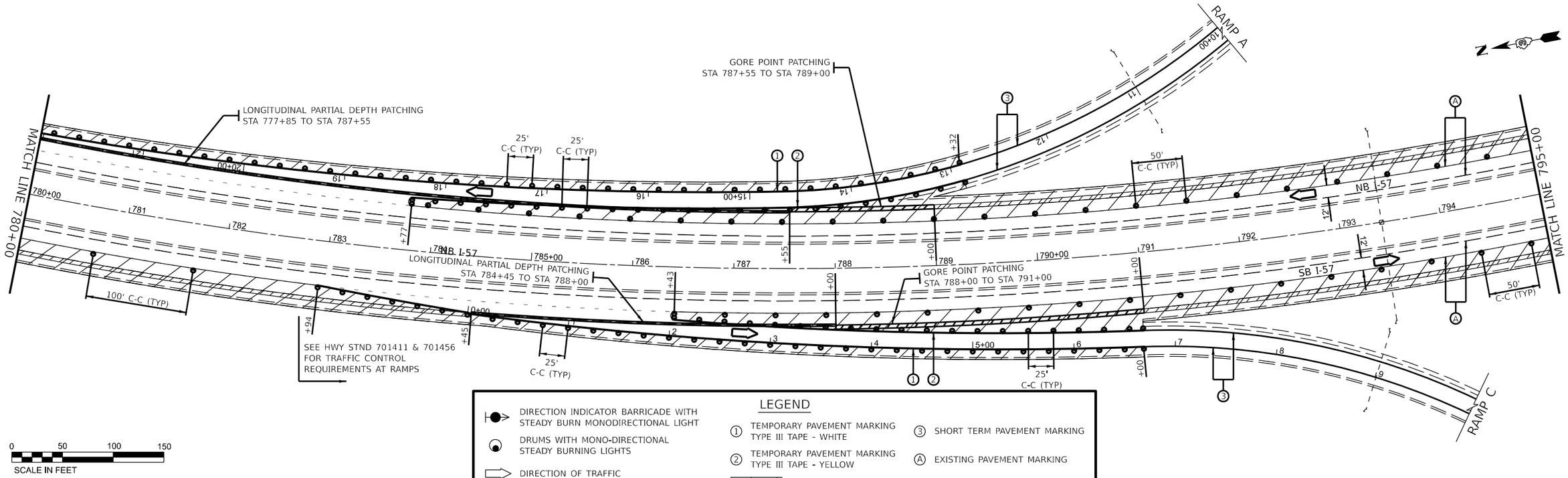


## LEGEND

- DIRECTION INDICATOR BARRICADE WITH STEADY BURN MONODIRECTIONAL LIGHT
- DRUMS WITH MONO-DIRECTIONAL STEADY BURNING LIGHTS
- DIRECTION OF TRAFFIC
- ARROW BOARD
- (1) TEMPORARY PAVEMENT MARKING TYPE III TAPE - WHITE
- (2) TEMPORARY PAVEMENT MARKING TYPE III TAPE - YELLOW
- (3) SHORT TERM PAVEMENT MARKING
- (A) EXISTING PAVEMENT MARKING
- WORK ZONE
- SHOULDER IMPROVEMENT IN PREPARATION OF STAGED TRAFFIC & INTERMITTENT PATCHING

NOTES:
ALTERATIONS TO THE TRAFFIC CONTROL PLAN SHALL BE APPROVED BY THE ENGINEER.
USE TRAFFIC CONTROL STANDARDS 701400, 701401 FOR PRE-STAGE WORKZONE. USE 701411 & 701456 FOR ALL RAMPS.
(NOT ALL TRAFFIC CONTROL DEVICES & SIGNING SHOWN) ADJUST RAMP OPENINGS IF REQUIRED.

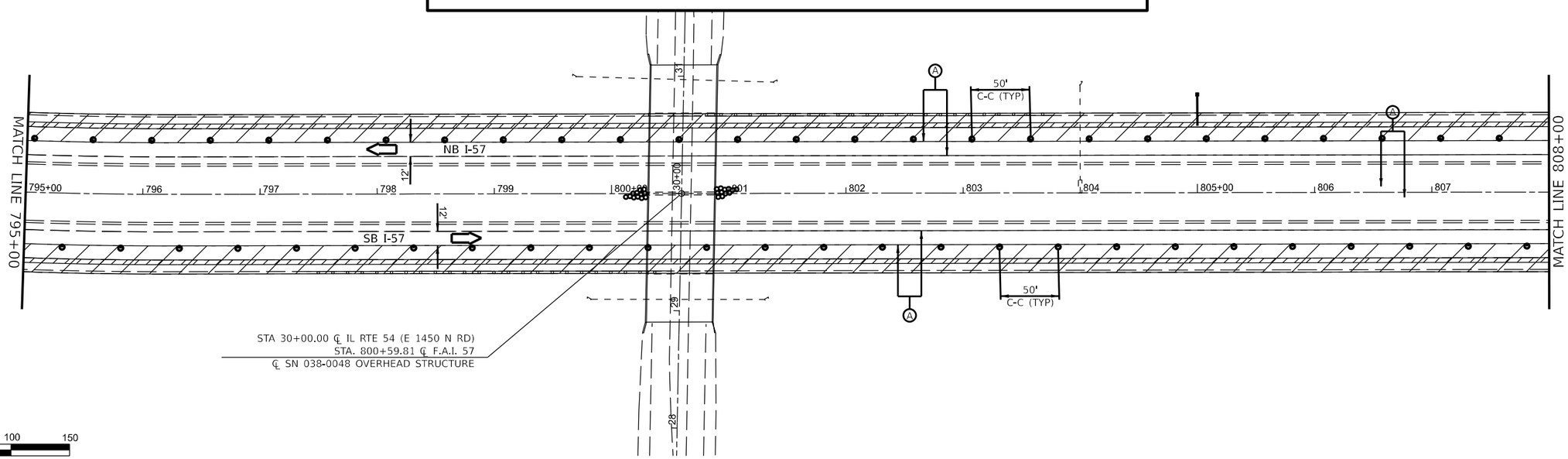


MODEL: Pre-Stage Sheets
FILE NAME: pw://ildot-pw.bentley.com:PWIDOT/Documents/IDOT Offices/District 3/ORD Projects/D386H62/CADData/CADsheets/66H62-Plan-PreStage.dgn

| | | | |
|---|---|---|---|
| USER NAME = Joseph.Zagar | DESIGNED - | REVISED - | |
| | DRAWN - | REVISED - | |
| PLOT SCALE = 100,000 ' / in. | CHECKED - | REVISED - | |
| PLOT DATE = 12/15/2023 | DATE - | REVISED - | |

**STATE OF ILLINOIS**
**DEPARTMENT OF TRANSPORTATION**

**PRE-STAGE TRAFFIC CONTROL**

SCALE: | SHEET 12 OF 17 SHEETS | STA. | TO STA.

| F.A.I. RTE. | SECTION | COUNTY | TOTAL SHEETS | SHEET NO. |
|---|---|---|---|---|
| 57 | (38-6,38-5)RS,BRR,CLV | IROQUOIS | 213 | 116 |
| | | CONTRACT NO. 66H62 | | |
| | ILLINOIS | FED. AID PROJECT | | |

Long Section Number

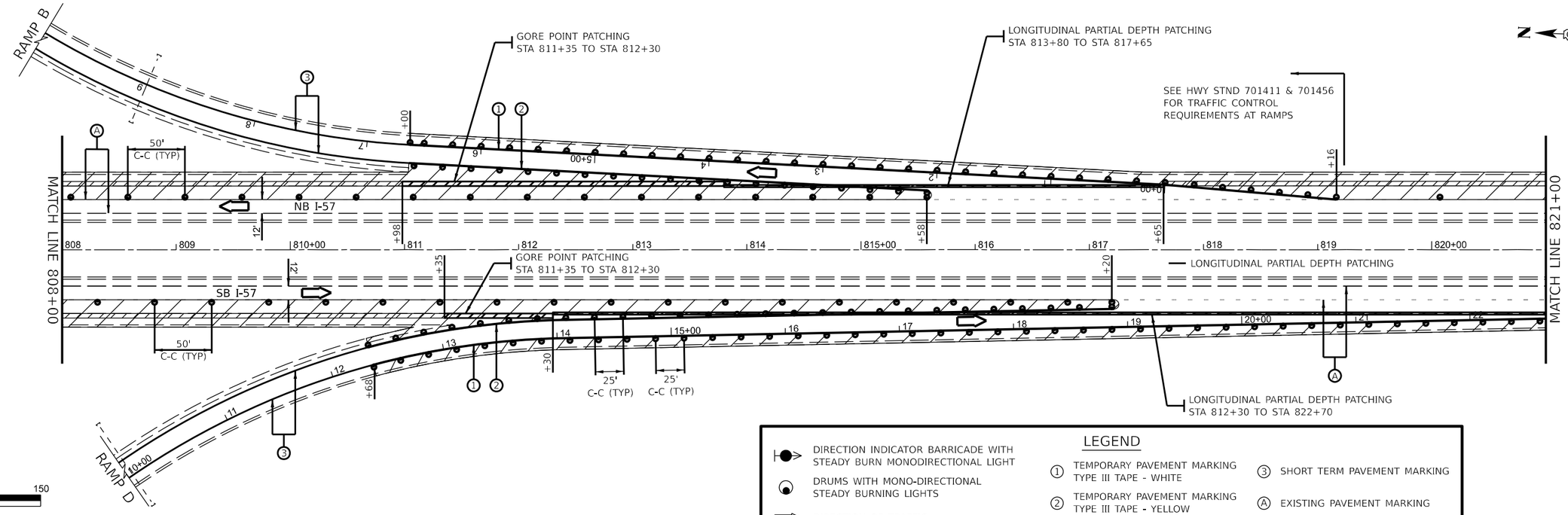


## LEGEND

- DIRECTION INDICATOR BARRICADE WITH STEADY BURN MONODIRECTIONAL LIGHT
- DRUMS WITH MONO-DIRECTIONAL STEADY BURNING LIGHTS
- DIRECTION OF TRAFFIC
- ARROW BOARD
- (1) TEMPORARY PAVEMENT MARKING TYPE III TAPE - WHITE
- (2) TEMPORARY PAVEMENT MARKING TYPE III TAPE - YELLOW
- (3) SHORT TERM PAVEMENT MARKING
- (A) EXISTING PAVEMENT MARKING
- WORK ZONE
- SHOULDER IMPROVEMENT IN PREPARATION OF STAGED TRAFFIC & INTERMITTENT PATCHING

NOTES:
ALTERATIONS TO THE TRAFFIC CONTROL PLAN SHALL BE APPROVED BY THE ENGINEER.
USE TRAFFIC CONTROL STANDARDS 701400, 701401 FOR PRE-STAGE WORKZONE. USE 701411 & 701456 FOR ALL RAMPS.
(NOT ALL TRAFFIC CONTROL DEVICES & SIGNING SHOWN) ADJUST RAMP OPENINGS IF REQUIRED.

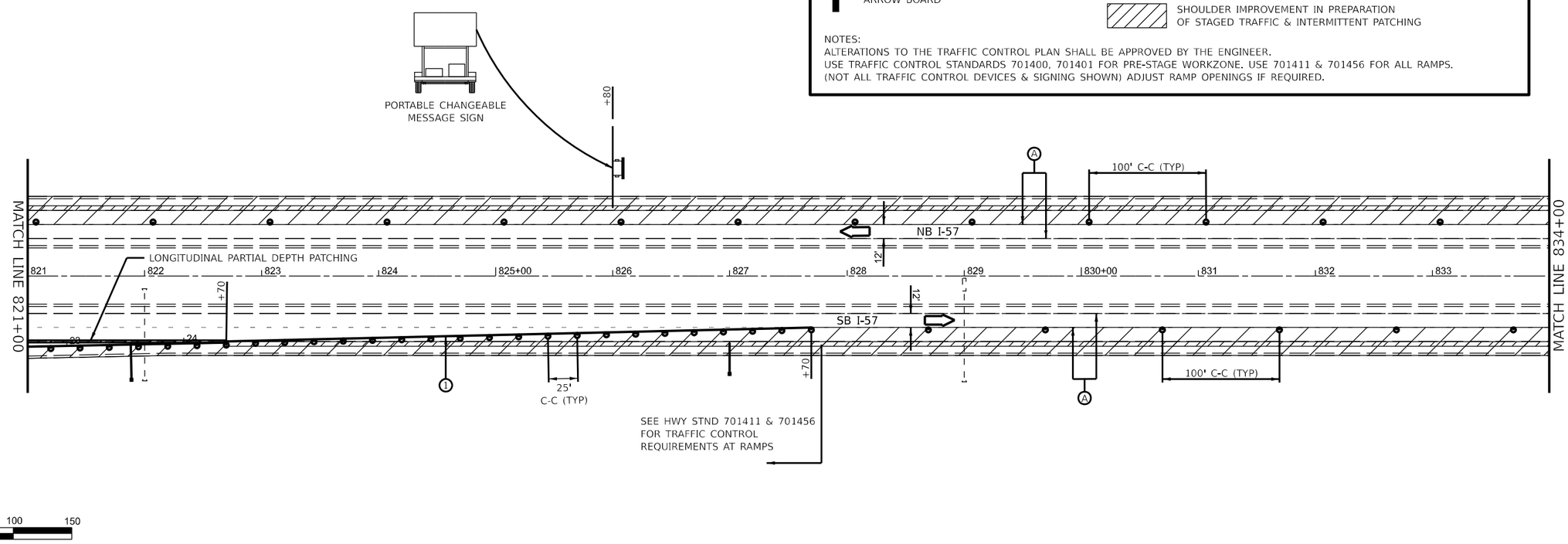


MODEL: Pre-Stage Sheets
FILE NAME: pw:\\ildot-pw.bentley.com:PWIDOT\Documents\IDOT Offices\District 3\ORD Projects\D386H62\CADData\CADsheets\66H62-Plan-PreStage.dgn

| | | | |
|---|---|---|---|
| USER NAME = Joseph.Zagar | DESIGNED - | REVISED - | |
| | DRAWN - | REVISED - | |
| PLOT SCALE = 100.000 ' / in. | CHECKED - | REVISED - | |
| PLOT DATE = 12/15/2023 | DATE - | REVISED - | |

**STATE OF ILLINOIS**
**DEPARTMENT OF TRANSPORTATION**

**PRE-STAGE TRAFFIC CONTROL**

SCALE: | SHEET 13 OF 17 SHEETS | STA. | TO STA.

| F.A.I. RTE. | SECTION | COUNTY | TOTAL SHEETS | SHEET NO. |
|---|---|---|---|---|
| 57 | (38-6,38-5)RS,BRR,CLV | IROQUOIS | 213 | 117 |
| | | CONTRACT NO. 66H62 | | |
| | ILLINOIS | FED. AID PROJECT | | |

Long Section Number

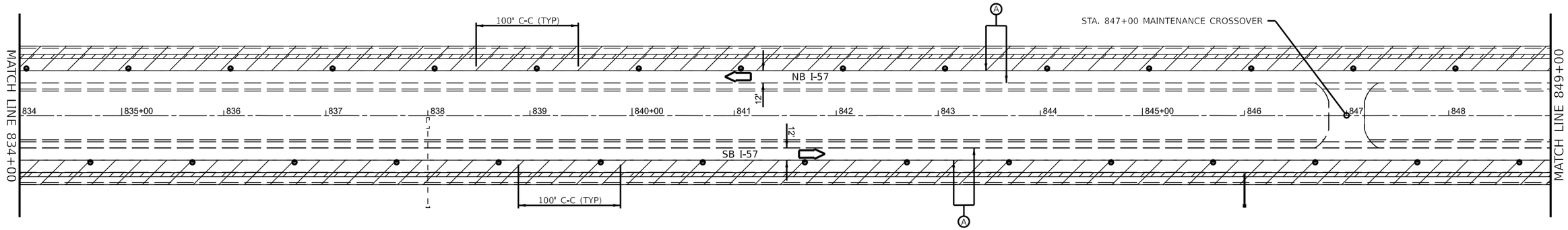


0 50 100 150
SCALE IN FEET

## LEGEND

- DIRECTION INDICATOR BARRICADE WITH STEADY BURN MONODIRECTIONAL LIGHT
- DRUMS WITH MONO-DIRECTIONAL STEADY BURNING LIGHTS
- DIRECTION OF TRAFFIC
- ARROW BOARD
- (1) TEMPORARY PAVEMENT MARKING TYPE III TAPE - WHITE
- (2) TEMPORARY PAVEMENT MARKING TYPE III TAPE - YELLOW
- (3) SHORT TERM PAVEMENT MARKING
- (A) EXISTING PAVEMENT MARKING
- WORK ZONE
- SHOULDER IMPROVEMENT IN PREPARATION OF STAGED TRAFFIC & INTERMITTENT PATCHING

NOTES:
ALTERATIONS TO THE TRAFFIC CONTROL PLAN SHALL BE APPROVED BY THE ENGINEER.
USE TRAFFIC CONTROL STANDARDS 701400, 701401 FOR PRE-STAGE WORKZONE. USE 701411 & 701456 FOR ALL RAMPS.
(NOT ALL TRAFFIC CONTROL DEVICES & SIGNING SHOWN) ADJUST RAMP OPENINGS IF REQUIRED.

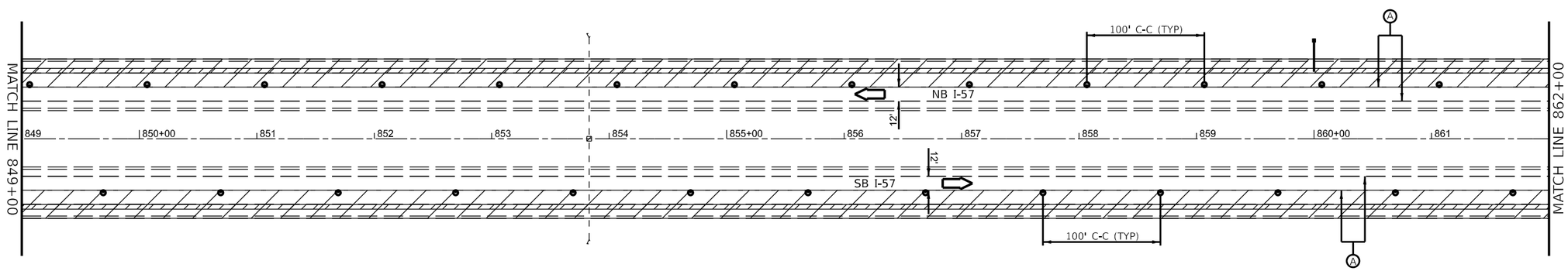


0 50 100 150
SCALE IN FEET

MODEL: Pre-Stage Sheets
FILE NAME: pw://ildot-pw.bentley.com:PWDOT/Documents/IDOT Offices/District 3/ORD Projects/D386H62/CADData/CADsheets/66H62-Plan-PreStage.dgn

| | | | |
|---|---|---|---|
| USER NAME = Joseph.Zagar | DESIGNED - | REVISED - | |
| | DRAWN - | REVISED - | |
| PLOT SCALE = 100.000 ' / in. | CHECKED - | REVISED - | |
| PLOT DATE = 12/15/2023 | DATE - | REVISED - | |

**STATE OF ILLINOIS**
**DEPARTMENT OF TRANSPORTATION**

**PRE-STAGE TRAFFIC CONTROL**

SCALE: | SHEET 14 OF 17 SHEETS | STA. | TO STA.

| F.A.I. RTE. | SECTION | COUNTY | TOTAL SHEETS | SHEET NO. |
|---|---|---|---|---|
| 57 | (38-6,38-5)RS,BRR,CLV | IROQUOIS | 213 | 118 |

CONTRACT NO. 66H62

ILLINOIS | FED. AID PROJECT

Long Section Number

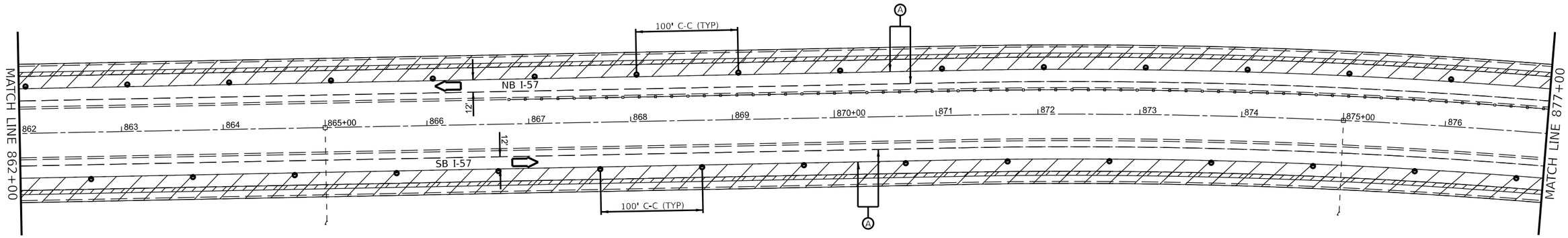


0 50 100 150
SCALE IN FEET

## LEGEND

- DIRECTION INDICATOR BARRICADE WITH STEADY BURN MONODIRECTIONAL LIGHT
- DRUMS WITH MONO-DIRECTIONAL STEADY BURNING LIGHTS
- DIRECTION OF TRAFFIC
- ARROW BOARD
- (1) TEMPORARY PAVEMENT MARKING TYPE III TAPE - WHITE
- (2) TEMPORARY PAVEMENT MARKING TYPE III TAPE - YELLOW
- (3) SHORT TERM PAVEMENT MARKING
- (A) EXISTING PAVEMENT MARKING
- WORK ZONE
- SHOULDER IMPROVEMENT IN PREPARATION OF STAGED TRAFFIC & INTERMITTENT PATCHING

NOTES:
ALTERATIONS TO THE TRAFFIC CONTROL PLAN SHALL BE APPROVED BY THE ENGINEER.
USE TRAFFIC CONTROL STANDARDS 701400, 701401 FOR PRE-STAGE WORKZONE. USE 701411 & 701456 FOR ALL RAMPS.
(NOT ALL TRAFFIC CONTROL DEVICES & SIGNING SHOWN) ADJUST RAMP OPENINGS IF REQUIRED.

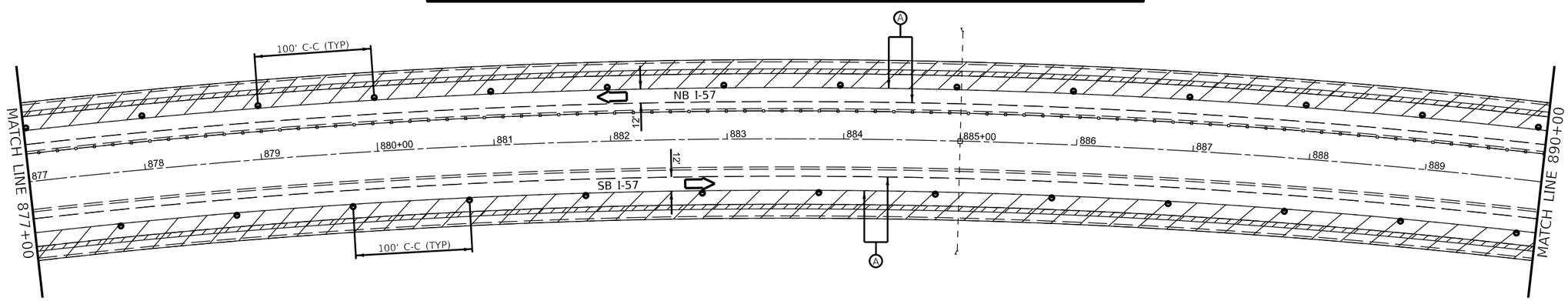


0 50 100 150
SCALE IN FEET

MODEL: Pre-Stage Sheets
FILE NAME: pw://ildcpw.bentley.com:PWDOT/Documents/IDOT Offices/District 3/ORD Projects/D386H62/CADData/CADsheets/66H62-Plan-PreStage.dgn

| | | | |
|---|---|---|---|
| USER NAME = Joseph.Zagar | DESIGNED - | REVISED - | |
| | DRAWN - | REVISED - | |
| PLOT SCALE = 100,000 ' / in. | CHECKED - | REVISED - | |
| PLOT DATE = 12/15/2023 | DATE - | REVISED - | |

**STATE OF ILLINOIS**
**DEPARTMENT OF TRANSPORTATION**

**PRE-STAGE TRAFFIC CONTROL**

SCALE: SHEET 15 OF 17 SHEETS STA. TO STA.

| F.A.I. RTE. | SECTION | COUNTY | TOTAL SHEETS | SHEET NO. |
|---|---|---|---|---|
| 57 | (38-6,38-5)RS,BRR,CLV | IROQUOIS | 213 | 119 |
| | | CONTRACT NO. 66H62 | | |
| | ILLINOIS | FED. AID PROJECT | | |

Long Section Number

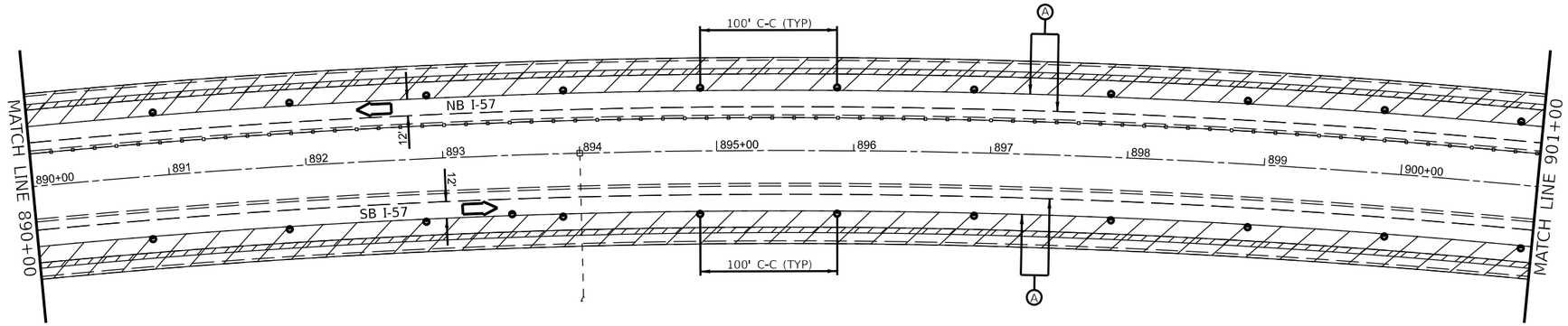


0 50 100 150
SCALE IN FEET

## LEGEND

- DIRECTION INDICATOR BARRICADE WITH STEADY BURN MONODIRECTIONAL LIGHT
- DRUMS WITH MONO-DIRECTIONAL STEADY BURNING LIGHTS
- DIRECTION OF TRAFFIC
- ARROW BOARD
- (1) TEMPORARY PAVEMENT MARKING TYPE III TAPE - WHITE
- (2) TEMPORARY PAVEMENT MARKING TYPE III TAPE - YELLOW
- (3) SHORT TERM PAVEMENT MARKING
- (A) EXISTING PAVEMENT MARKING
- WORK ZONE
- SHOULDER IMPROVEMENT IN PREPARATION OF STAGED TRAFFIC & INTERMITTENT PATCHING

NOTES:
ALTERATIONS TO THE TRAFFIC CONTROL PLAN SHALL BE APPROVED BY THE ENGINEER.
USE TRAFFIC CONTROL STANDARDS 701400, 701401 FOR PRE-STAGE WORKZONE. USE 701411 & 701456 FOR ALL RAMPS.
(NOT ALL TRAFFIC CONTROL DEVICES & SIGNING SHOWN) ADJUST RAMP OPENINGS IF REQUIRED.

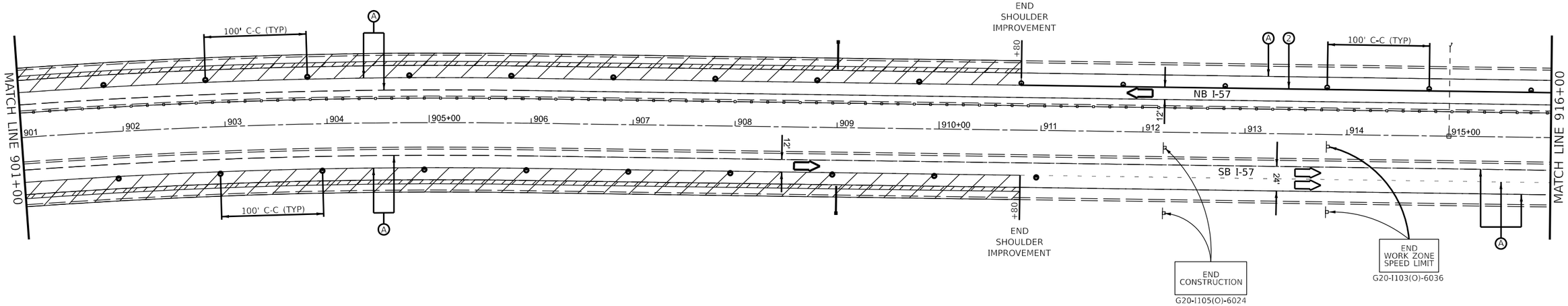


0 50 100 150
SCALE IN FEET

MODEL: Pre-Stage Sheets
FILE NAME: pw://ildot-pw.bentley.com:PWDOT/Documents/IDOT Offices/District 3/ORD Projects/D386H62/CADData/CADsheets/66H62-Plan-PreStage.dgn

| | | | |
|---|---|---|---|
| USER NAME = Joseph.Zagar | DESIGNED - | REVISED - | |
| | DRAWN - | REVISED - | |
| PLOT SCALE = 100,000 ' / in. | CHECKED - | REVISED - | |
| PLOT DATE = 12/15/2023 | DATE - | REVISED - | |

**STATE OF ILLINOIS**
**DEPARTMENT OF TRANSPORTATION**

**PRE-STAGE TRAFFIC CONTROL**

SCALE: | SHEET 16 OF 17 SHEETS | STA. | TO STA.

| F.A.I. RTE. | SECTION | COUNTY | TOTAL SHEETS | SHEET NO. |
|---|---|---|---|---|
| 57 | (38-6,38-5)RS,BRR,CLV | IROQUOIS | 213 | 120 |
| | | CONTRACT NO. 66H62 | | |
| | ILLINOIS | FED. AID PROJECT | | |

Long Section Number

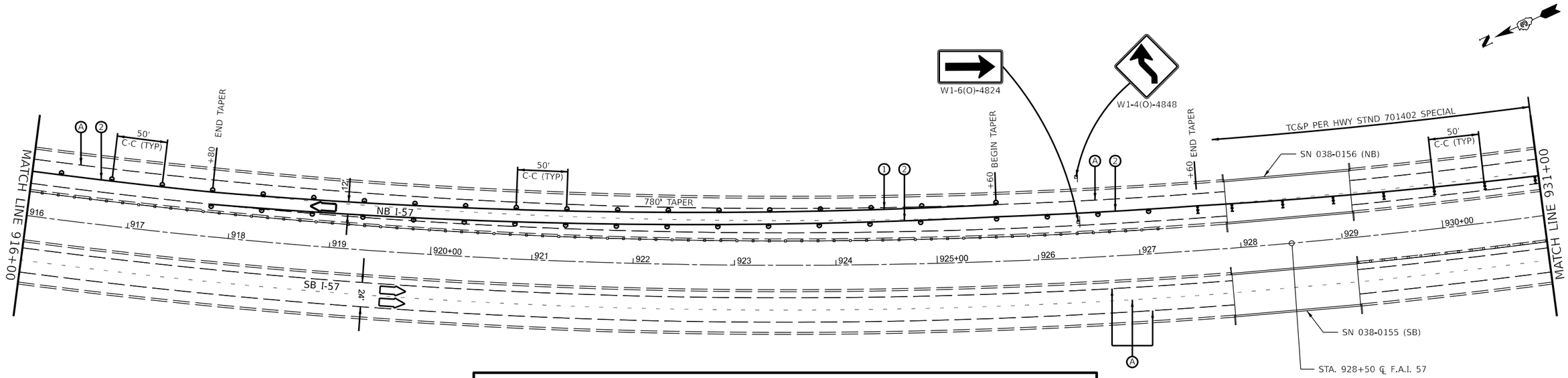


0 50 100 150
SCALE IN FEET

## LEGEND

- DIRECTION INDICATOR BARRICADE WITH STEADY BURN MONODIRECTIONAL LIGHT
- DRUMS WITH MONO-DIRECTIONAL STEADY BURNING LIGHTS
- DIRECTION OF TRAFFIC
- ARROW BOARD
- (1) TEMPORARY PAVEMENT MARKING TYPE III TAPE - WHITE
- (2) TEMPORARY PAVEMENT MARKING TYPE III TAPE - YELLOW
- (3) SHORT TERM PAVEMENT MARKING
- (A) EXISTING PAVEMENT MARKING
- WORK ZONE
- SHOULDER IMPROVEMENT IN PREPARATION OF STAGED TRAFFIC & INTERMITTENT PATCHING

NOTES:
ALTERATIONS TO THE TRAFFIC CONTROL PLAN SHALL BE APPROVED BY THE ENGINEER.
USE TRAFFIC CONTROL STANDARDS 701400, 701401 FOR PRE-STAGE WORKZONE. USE 701411 & 701456 FOR ALL RAMPS.
(NOT ALL TRAFFIC CONTROL DEVICES & SIGNING SHOWN) ADJUST RAMP OPENINGS IF REQUIRED.

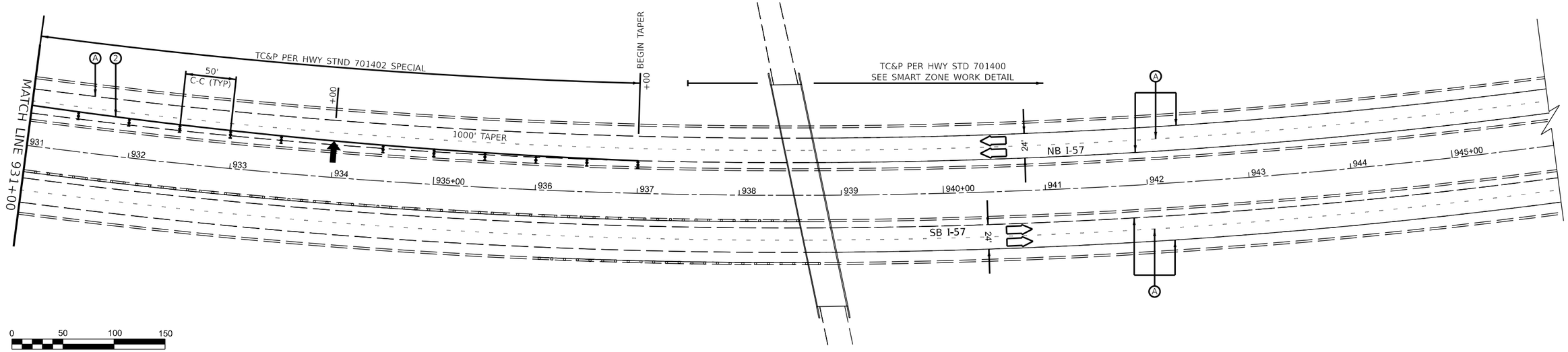


0 50 100 150
SCALE IN FEET

MODEL: Pre-Stage Sheets
FILE NAME: pw://ildot-pw.bentley.com:PWDOT/Documents/IDOT Offices/District 3/ORD Projects/D386H62/CADData/CADsheets/66H62-Plan-PreStage.dgn

| | | | |
|---|---|---|---|
| USER NAME = Joseph.Zagar | DESIGNED - | REVISED - | |
| | DRAWN - | REVISED - | |
| PLOT SCALE = 100.000 ' / in. | CHECKED - | REVISED - | |
| PLOT DATE = 12/15/2023 | DATE - | REVISED - | |

**STATE OF ILLINOIS**
**DEPARTMENT OF TRANSPORTATION**

**PRE-STAGE TRAFFIC CONTROL**

SCALE: SHEET 17 OF 17 SHEETS STA. TO STA.

| F.A.I. RTE. | SECTION | COUNTY | TOTAL SHEETS | SHEET NO. |
|---|---|---|---|---|
| 57 | (38-6,38-5)RS,BRR,CLV | IROQUOIS | 213 | 121 |
| | | CONTRACT NO. 66H62 | | |
| | ILLINOIS | FED. AID PROJECT | | |

Long Section Number

## LEGEND

- DIRECTION INDICATOR BARRICADE WITH STEADY BURN MONODIRECTIONAL LIGHT
- DRUMS WITH MONO-DIRECTIONAL STEADY BURNING LIGHTS
- DIRECTION OF TRAFFIC
- IMPACT ATTENUATOR, TEMPORARY (NON-REDIRECTIVE TL 3)
- TEMPORARY CONCRETE BARRIER
- ARROW BOARD
- CLASS A PATCHING UNDER STRUCTURES
- WORK ZONE
- (A) EXISTING PAVEMENT MARKING
- (1) TEMPORARY PAVEMENT MARKING MODIFIED URETHANE - WHITE
- (2) TEMPORARY PAVEMENT MARKING MODIFIED URETHANE - YELLOW
- (3) TEMPORARY PAVEMENT MARKING TYPE III TAPE - WHITE
- (4) TEMPORARY PAVEMENT MARKING TYPE III TAPE - YELLOW
- (5) SHORT TERM PAVEMENT MARKING

NOTES:
ALTERATIONS TO THE TRAFFIC CONTROL PLAN SHALL BE APPROVED BY THE ENGINEER.
USE TRAFFIC CONTROL STANDARD 701400 & 701401/701402 FOR STAGE 1 WORKZONE. USE 701411 & 701456 FOR ALL RAMPS.
(NOT ALL TRAFFIC CONTROL DEVICES & SIGNING SHOWN) ADJUST RAMP OPENINGS IF REQUIRED.

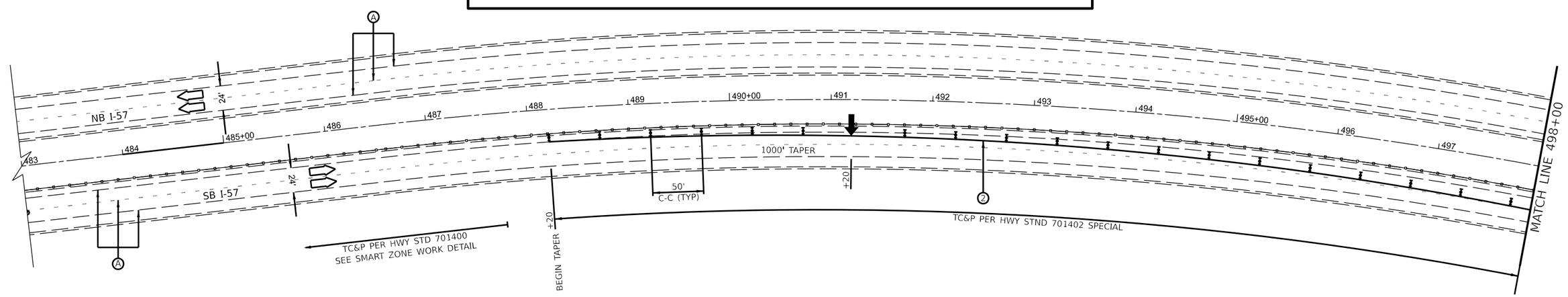


0 50 100 150
SCALE IN FEET

MODEL: Stage 1 Sheets
FILE NAME: pw://illinois.bentley.com:PWIDOT/Documents/IDOT Offices/District 3/ORD Projects/D396H62/CADData/CADsheets/66H62-Plan-Stage 1

| | | | |
|---|---|---|---|
| USER NAME = Joseph.Zagar | DESIGNED - | REVISED - | |
| | DRAWN - | REVISED - | |
| PLOT SCALE = 100,000 ' / in. | CHECKED - | REVISED - | |
| PLOT DATE = 12/15/2023 | DATE - | REVISED - | |

**STATE OF ILLINOIS**
**DEPARTMENT OF TRANSPORTATION**

**STAGE 1 TRAFFIC CONTROL**

SCALE: | SHEET 1 OF 17 SHEETS | STA. | TO STA.

| F.A.I RTE. | SECTION | COUNTY | TOTAL SHEETS | SHEET NO. |
|---|---|---|---|---|
| 57 | (38-6,38-5)RS,BRR,CLV | IROQUOIS | 213 | 122 |
| | | CONTRACT NO. 66H62 | | |
| | ILLINOIS | FED. AID PROJECT | | |

Long Section Number

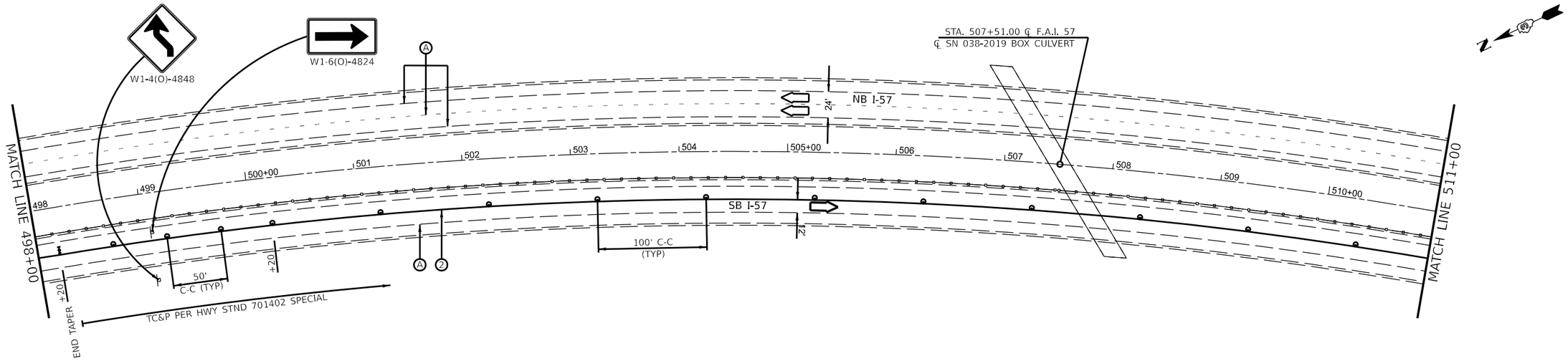


0 50 100 150
SCALE IN FEET

## LEGEND

- DIRECTION INDICATOR BARRICADE WITH STEADY BURN MONODIRECTIONAL LIGHT
- DRUMS WITH MONO-DIRECTIONAL STEADY BURNING LIGHTS
- DIRECTION OF TRAFFIC
- IMPACT ATTENUATOR, TEMPORARY (NON-REDIRECTIVE TL 3)
- TEMPORARY CONCRETE BARRIER
- ARROW BOARD
- CLASS A PATCHING UNDER STRUCTURES
- WORK ZONE
- (A) EXISTING PAVEMENT MARKING
- (1) TEMPORARY PAVEMENT MARKING MODIFIED URETHANE - WHITE
- (2) TEMPORARY PAVEMENT MARKING MODIFIED URETHANE - YELLOW
- (3) TEMPORARY PAVEMENT MARKING TYPE III TAPE - WHITE
- (4) TEMPORARY PAVEMENT MARKING TYPE III TAPE - YELLOW
- (5) SHORT TERM PAVEMENT MARKING

NOTES:
ALTERATIONS TO THE TRAFFIC CONTROL PLAN SHALL BE APPROVED BY THE ENGINEER.
USE TRAFFIC CONTROL STANDARD 701400 & 701401/701402 FOR STAGE 1 WORKZONE. USE 701411 & 701456 FOR ALL RAMPS.
(NOT ALL TRAFFIC CONTROL DEVICES & SIGNING SHOWN) ADJUST RAMP OPENINGS IF REQUIRED.

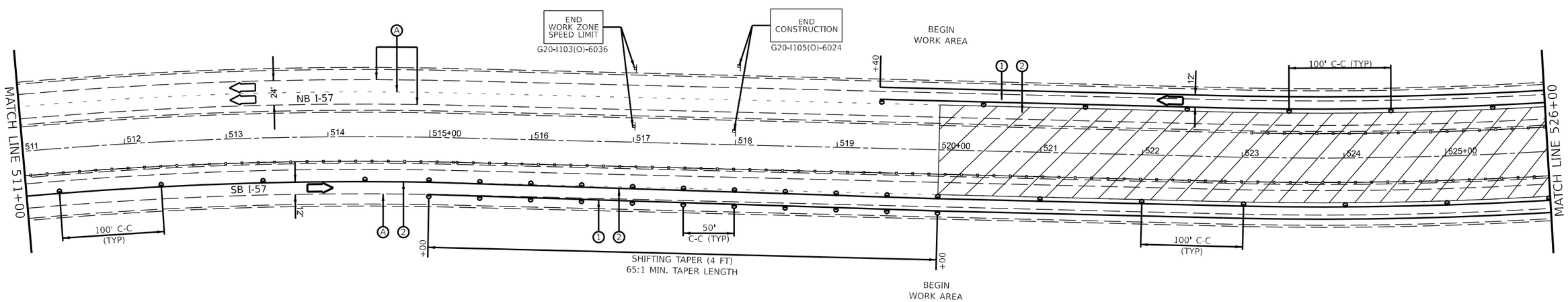


0 50 100 150
SCALE IN FEET

MODEL: Stage 1 Sheets
FILE NAME: pw://ildot-pw.bentley.com:PWIDOT/Documents/IDOT Offices/District 3/ORD Projects/D366H62/CADData/CADsheets/66H62-Plan-Stage 1

| | | | |
|---|---|---|---|
| USER NAME = Joseph.Zagar | DESIGNED - | REVISED - | |
| | DRAWN - | REVISED - | |
| PLOT SCALE = 100.000 ' / in. | CHECKED - | REVISED - | |
| PLOT DATE = 12/15/2023 | DATE - | REVISED - | |

**STATE OF ILLINOIS**
**DEPARTMENT OF TRANSPORTATION**

**STAGE 1 TRAFFIC CONTROL**

SCALE: | SHEET 2 OF 17 SHEETS | STA. | TO STA.

| F.A.I RTE. | SECTION | COUNTY | TOTAL SHEETS | SHEET NO. |
|---|---|---|---|---|
| 57 | (38-6,38-5)RS,BRR,CLV | IROQUOIS | 213 | 123 |
| | | CONTRACT NO. 66H62 | | |
| | | ILLINOIS FED. AID PROJECT | | |

Long Section Number

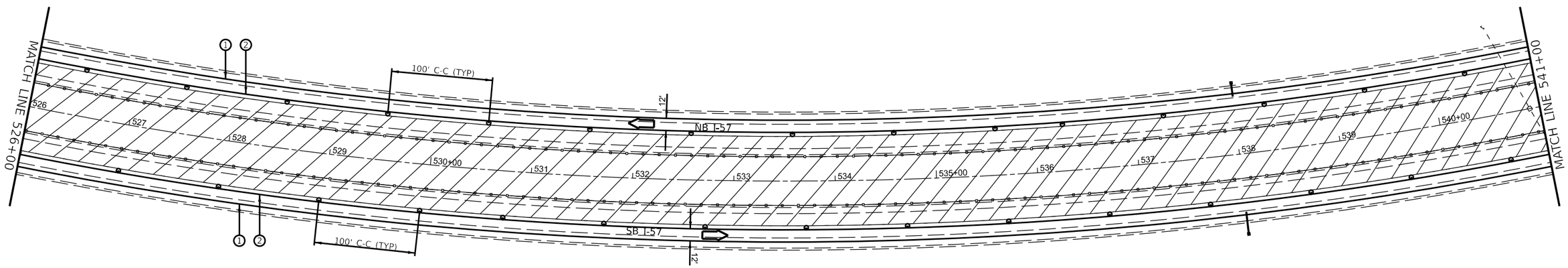


0 50 100 150
SCALE IN FEET

## LEGEND

- DIRECTION INDICATOR BARRICADE WITH STEADY BURN MONODIRECTIONAL LIGHT
- DRUMS WITH MONO-DIRECTIONAL STEADY BURNING LIGHTS
- DIRECTION OF TRAFFIC
- IMPACT ATTENUATOR, TEMPORARY (NON-REDIRECTIVE TL 3)
- TEMPORARY CONCRETE BARRIER
- ARROW BOARD
- CLASS A PATCHING UNDER STRUCTURES
- WORK ZONE
- (A) EXISTING PAVEMENT MARKING
- (1) TEMPORARY PAVEMENT MARKING MODIFIED URETHANE - WHITE
- (2) TEMPORARY PAVEMENT MARKING MODIFIED URETHANE - YELLOW
- (3) TEMPORARY PAVEMENT MARKING TYPE III TAPE - WHITE
- (4) TEMPORARY PAVEMENT MARKING TYPE III TAPE - YELLOW
- (5) SHORT TERM PAVEMENT MARKING

NOTES:
ALTERATIONS TO THE TRAFFIC CONTROL PLAN SHALL BE APPROVED BY THE ENGINEER.
USE TRAFFIC CONTROL STANDARD 701400 & 701401/701402 FOR STAGE 1 WORKZONE. USE 701411 & 701456 FOR ALL RAMPS.
(NOT ALL TRAFFIC CONTROL DEVICES & SIGNING SHOWN) ADJUST RAMP OPENINGS IF REQUIRED.

STA 30+00.00 ℄ F.A.S. RTE 338 (E 1900 N RD)
STA. 541+66.36 ℄ F.A.I. 57
℄ SN 038-0086 OVERHEAD STRUCTURE

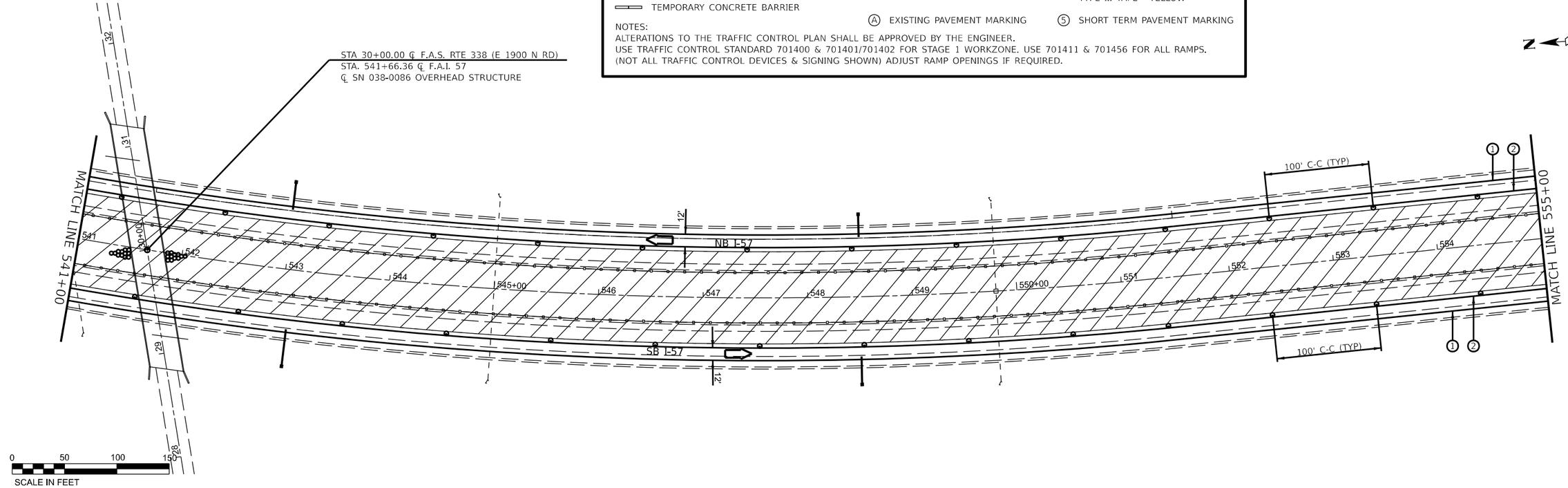


0 50 100 150
SCALE IN FEET

MODEL: Stage 1 Sheets
FILE NAME: pw://ildot-pw.bentley.com:PWIDOT/Documents/IDOT Offices/District 3/ORD Projects/93698H62/CADData/CADsheets/68H62-Plan-Stage 1

| | | | |
|---|---|---|---|
| USER NAME = Joseph.Zagar | DESIGNED - | REVISED - | |
| | DRAWN - | REVISED - | |
| PLOT SCALE = 100.000 ' / in. | CHECKED - | REVISED - | |
| PLOT DATE = 12/15/2023 | DATE - | REVISED - | |

**STATE OF ILLINOIS**
**DEPARTMENT OF TRANSPORTATION**

**STAGE 1 TRAFFIC CONTROL**

SCALE: | SHEET 3 OF 17 SHEETS | STA. | TO STA.

| F.A.I RTE. | SECTION | COUNTY | TOTAL SHEETS | SHEET NO. |
|---|---|---|---|---|
| 57 | (38-6,38-5)RS,BRR,CLV | IROQUOIS | 213 | 124 |
| | | CONTRACT NO. 66H62 | | |
| | ILLINOIS | FED. AID PROJECT | | |

Long Section Number

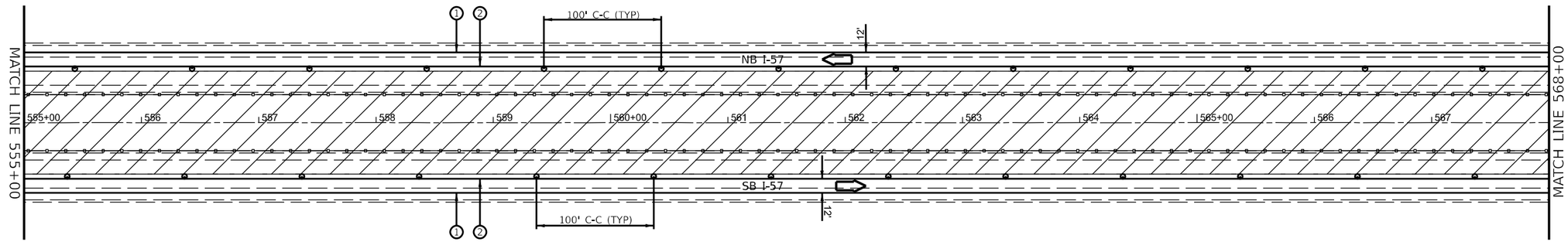


0 50 100 150
SCALE IN FEET

## LEGEND

- DIRECTION INDICATOR BARRICADE WITH STEADY BURN MONODIRECTIONAL LIGHT
- DRUMS WITH MONO-DIRECTIONAL STEADY BURNING LIGHTS
- DIRECTION OF TRAFFIC
- IMPACT ATTENUATOR, TEMPORARY (NON-REDIRECTIVE TL 3)
- TEMPORARY CONCRETE BARRIER
- ARROW BOARD
- CLASS A PATCHING UNDER STRUCTURES
- WORK ZONE
- (A) EXISTING PAVEMENT MARKING
- (1) TEMPORARY PAVEMENT MARKING MODIFIED URETHANE - WHITE
- (2) TEMPORARY PAVEMENT MARKING MODIFIED URETHANE - YELLOW
- (3) TEMPORARY PAVEMENT MARKING TYPE III TAPE - WHITE
- (4) TEMPORARY PAVEMENT MARKING TYPE III TAPE - YELLOW
- (5) SHORT TERM PAVEMENT MARKING

NOTES:
ALTERATIONS TO THE TRAFFIC CONTROL PLAN SHALL BE APPROVED BY THE ENGINEER.
USE TRAFFIC CONTROL STANDARD 701400 & 701401/701402 FOR STAGE 1 WORKZONE. USE 701411 & 701456 FOR ALL RAMPS.
(NOT ALL TRAFFIC CONTROL DEVICES & SIGNING SHOWN) ADJUST RAMP OPENINGS IF REQUIRED.

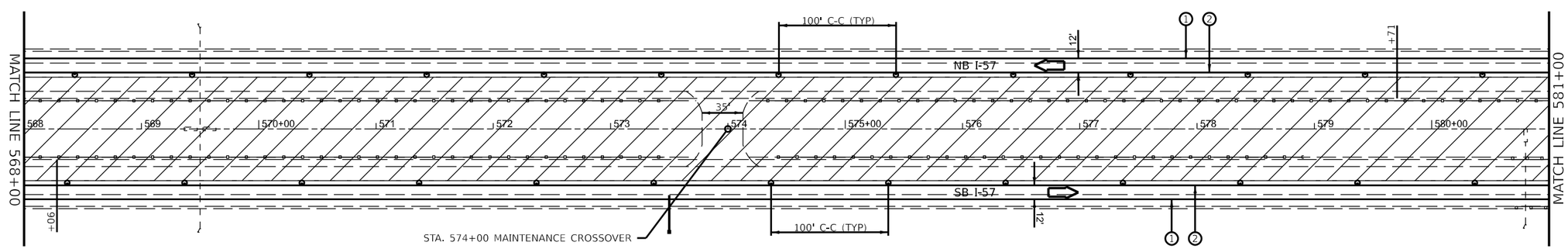


0 50 100 150
SCALE IN FEET

MODEL: Stage 1 Sheets
FILE NAME: pw://bldxpw.bentley.com:PWIDOT/Documents/IDOT Offices/District 3/ORD Projects/D398482/CADData/CADsheets/66H62-Plan-Stage 1

| | | | |
|---|---|---|---|
| USER NAME = Joseph.Zagar | DESIGNED - | REVISED - | STATE OF ILLINOIS DEPARTMENT OF TRANSPORTATION |
| | DRAWN - | REVISED - | |
| PLOT SCALE = 100,000 ' / in. | CHECKED - | REVISED - | |
| PLOT DATE = 12/15/2023 | DATE - | REVISED - | |

**STAGE 1 TRAFFIC CONTROL**

SCALE: SHEET 4 OF 17 SHEETS STA. TO STA.

| F.A.I RTE. | SECTION | COUNTY | TOTAL SHEETS | SHEET NO. |
|---|---|---|---|---|
| 57 | (38-6,38-5)RS,BRR,CLV | IROQUOIS | 213 | 125 |
| | | CONTRACT NO. 66H62 | | |
| | | ILLINOIS | FED. AID PROJECT | |

Long Section Number

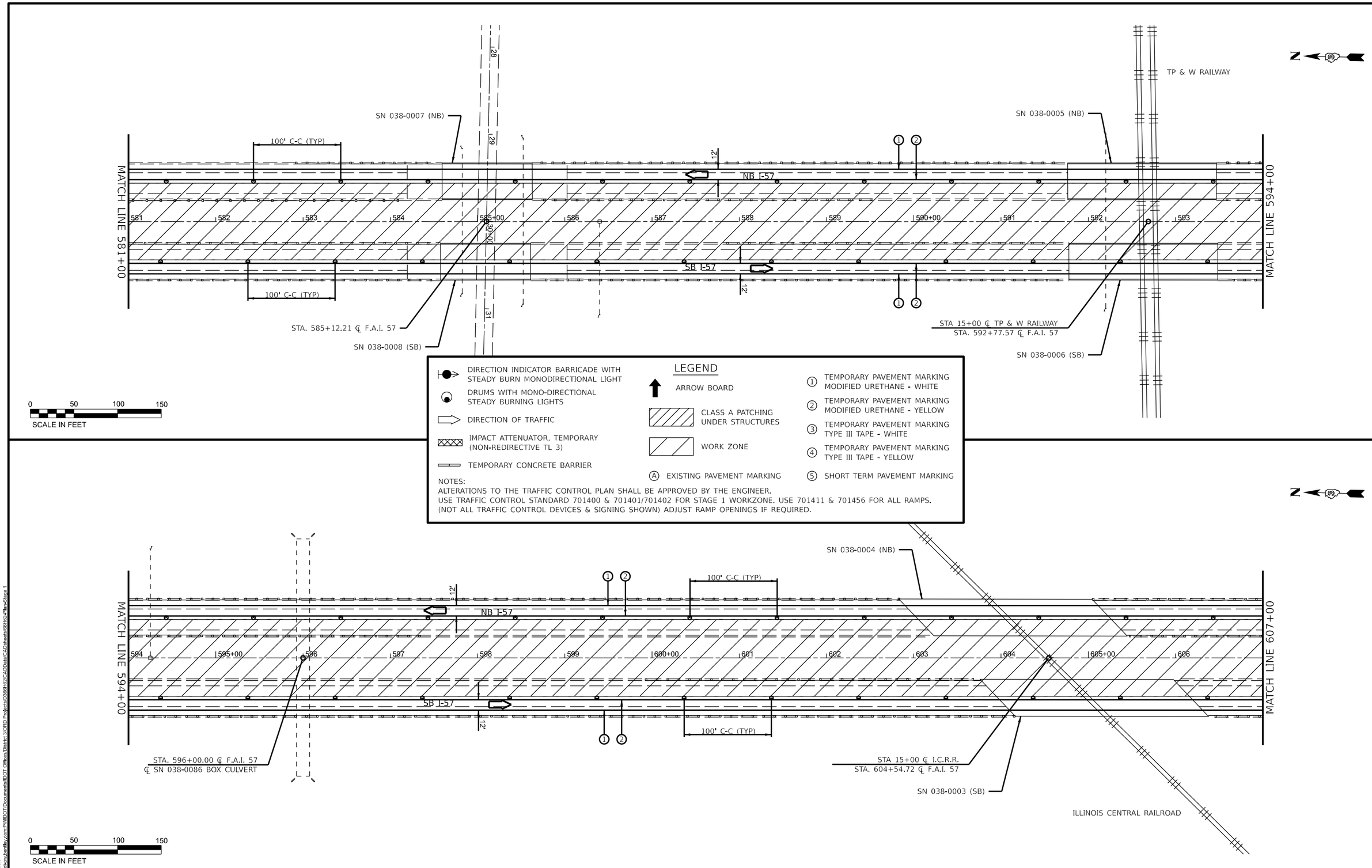


MODEL: Stage 1 Sheets
FILE NAME: pw://ildot-pw.bentley.com:PWIDOT/Documents/IDOT Offices/District 3/ORD Projects/D366H62/CADData/CADsheets/66H62-Plan-Stage 1

| | | | |
|---|---|---|---|
| USER NAME = Joseph.Zagar | DESIGNED - | REVISED - | |
| | DRAWN - | REVISED - | |
| PLOT SCALE = 100,000 ' / in. | CHECKED - | REVISED - | |
| PLOT DATE = 12/15/2023 | DATE - | REVISED - | |

**STATE OF ILLINOIS**
**DEPARTMENT OF TRANSPORTATION**

**STAGE 1 TRAFFIC CONTROL**

SCALE: | SHEET 5 OF 17 SHEETS | STA. | TO STA.

| F.A.I RTE. | SECTION | COUNTY | TOTAL SHEETS | SHEET NO. |
|---|---|---|---|---|
| 57 | (38-6,38-5)RS,BRR,CLV | IROQUOIS | 213 | 126 |
| | | CONTRACT NO. 66H62 | | |
| | | ILLINOIS | FED. AID PROJECT | |

Long Section Number

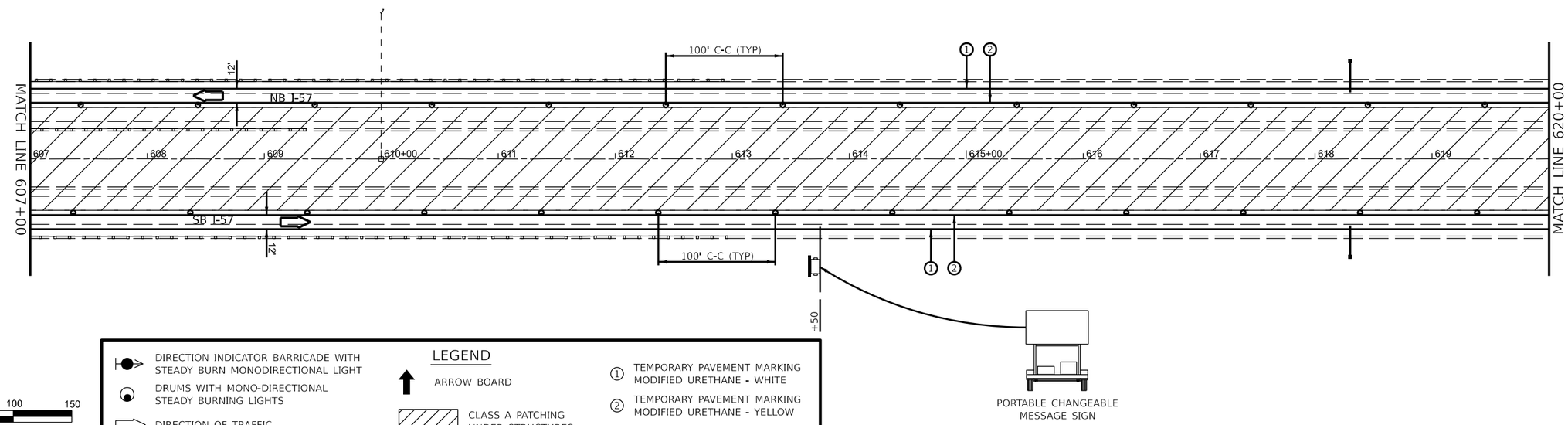


## LEGEND

- DIRECTION INDICATOR BARRICADE WITH STEADY BURN MONODIRECTIONAL LIGHT
- DRUMS WITH MONO-DIRECTIONAL STEADY BURNING LIGHTS
- DIRECTION OF TRAFFIC
- IMPACT ATTENUATOR, TEMPORARY (NON-REDIRECTIVE TL 3)
- TEMPORARY CONCRETE BARRIER
- ARROW BOARD
- CLASS A PATCHING UNDER STRUCTURES
- WORK ZONE
- (A) EXISTING PAVEMENT MARKING
- (1) TEMPORARY PAVEMENT MARKING MODIFIED URETHANE - WHITE
- (2) TEMPORARY PAVEMENT MARKING MODIFIED URETHANE - YELLOW
- (3) TEMPORARY PAVEMENT MARKING TYPE III TAPE - WHITE
- (4) TEMPORARY PAVEMENT MARKING TYPE III TAPE - YELLOW
- (5) SHORT TERM PAVEMENT MARKING

NOTES:
ALTERATIONS TO THE TRAFFIC CONTROL PLAN SHALL BE APPROVED BY THE ENGINEER.
USE TRAFFIC CONTROL STANDARD 701400 & 701401/701402 FOR STAGE 1 WORKZONE. USE 701411 & 701456 FOR ALL RAMPS.
(NOT ALL TRAFFIC CONTROL DEVICES & SIGNING SHOWN) ADJUST RAMP OPENINGS IF REQUIRED.

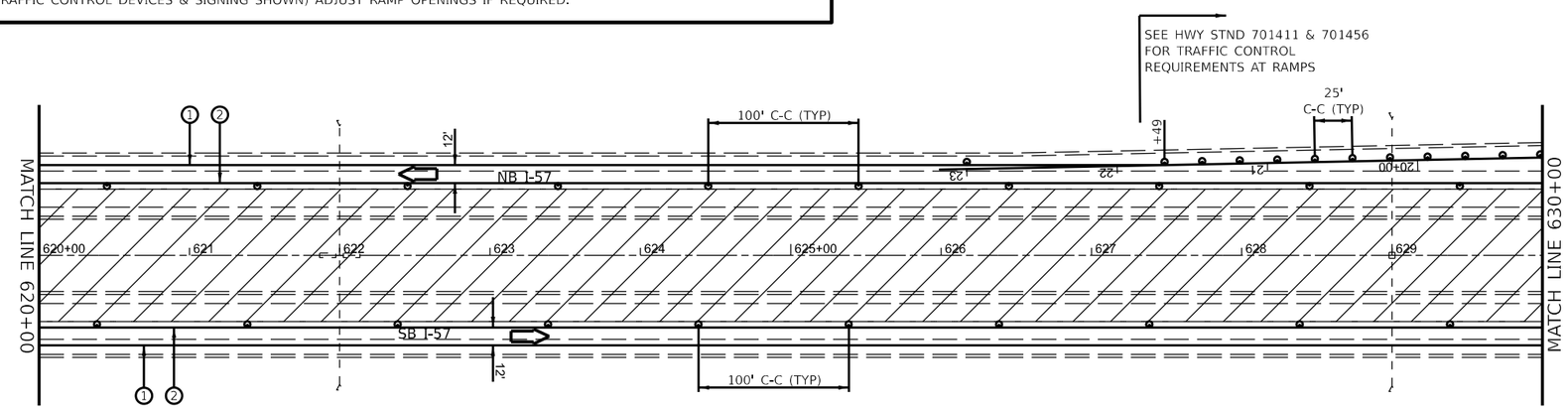


MODEL: Stage 1 Sheets
FILE NAME: pw://ildot-pw.bentley.com:PWIDOT/Documents/IDOT Offices/District 3/ORD Projects/D366H62/CADData/CADsheets/66H62-Plan-Stage 1

| | | | |
|---|---|---|---|
| USER NAME = Joseph.Zagar | DESIGNED - | REVISED - | STATE OF ILLINOIS DEPARTMENT OF TRANSPORTATION |
| | DRAWN - | REVISED - | |
| PLOT SCALE = 100,000 ' / in. | CHECKED - | REVISED - | |
| PLOT DATE = 12/15/2023 | DATE - | REVISED - | |

**STAGE 1 TRAFFIC CONTROL**

SCALE: SHEET 6 OF 17 SHEETS STA. TO STA.

| F.A.I RTE. | SECTION | COUNTY | TOTAL SHEETS | SHEET NO. |
|---|---|---|---|---|
| 57 | (38-6,38-5)RS,BRR,CLV | IROQUOIS | 213 | 127 |
| | | CONTRACT NO. 66H62 | | |
| | | ILLINOIS FED. AID PROJECT | | |

Long Section Number

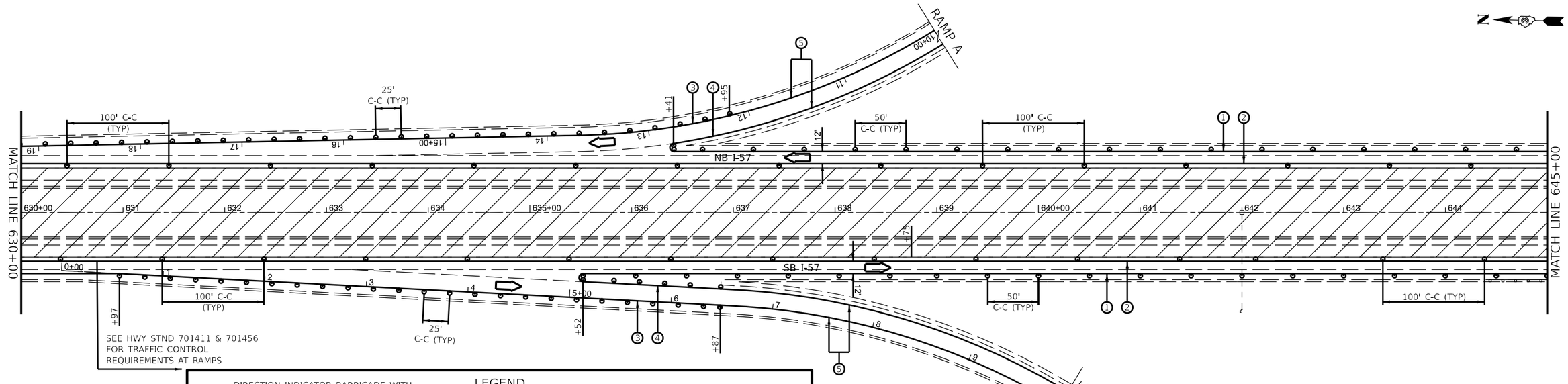


## LEGEND

- DIRECTION INDICATOR BARRICADE WITH STEADY BURN MONODIRECTIONAL LIGHT
- DRUMS WITH MONO-DIRECTIONAL STEADY BURNING LIGHTS
- DIRECTION OF TRAFFIC
- IMPACT ATTENUATOR, TEMPORARY (NON-REDIRECTIVE TL 3)
- TEMPORARY CONCRETE BARRIER
- ARROW BOARD
- CLASS A PATCHING UNDER STRUCTURES
- WORK ZONE
- (A) EXISTING PAVEMENT MARKING
- (1) TEMPORARY PAVEMENT MARKING MODIFIED URETHANE - WHITE
- (2) TEMPORARY PAVEMENT MARKING MODIFIED URETHANE - YELLOW
- (3) TEMPORARY PAVEMENT MARKING TYPE III TAPE - WHITE
- (4) TEMPORARY PAVEMENT MARKING TYPE III TAPE - YELLOW
- (5) SHORT TERM PAVEMENT MARKING

NOTES:
ALTERATIONS TO THE TRAFFIC CONTROL PLAN SHALL BE APPROVED BY THE ENGINEER.
USE TRAFFIC CONTROL STANDARD 701400 & 701401/701402 FOR STAGE 1 WORKZONE. USE 701411 & 701456 FOR ALL RAMPS.
(NOT ALL TRAFFIC CONTROL DEVICES & SIGNING SHOWN) ADJUST RAMP OPENINGS IF REQUIRED.

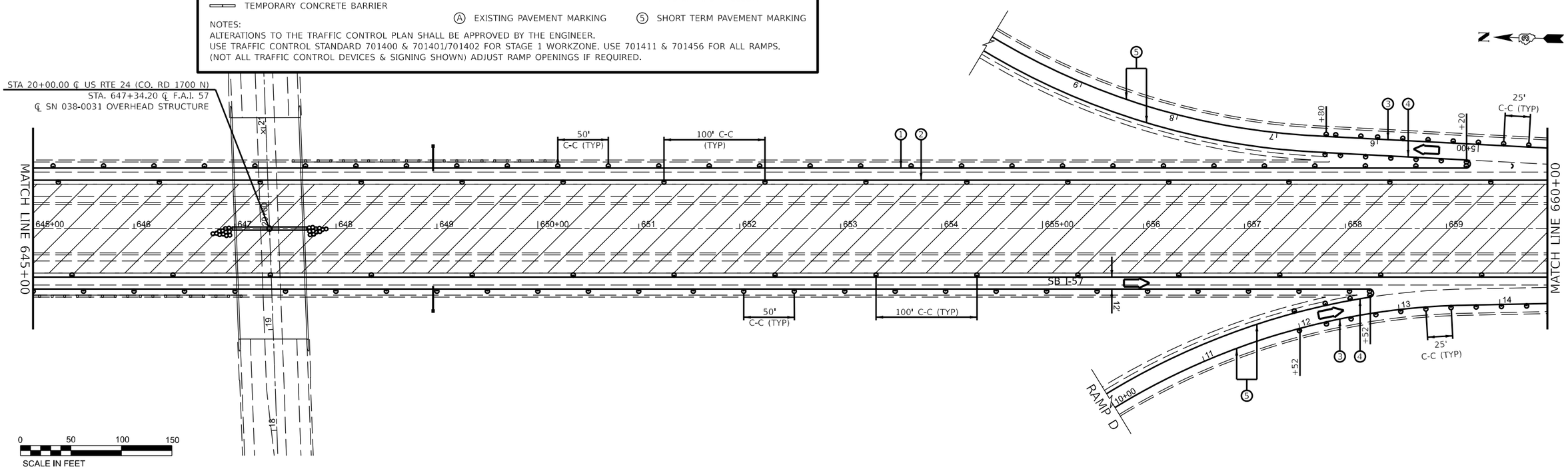


MODEL: Stage 1 Sheets
FILE NAME: pw://ildot-pw.bentley.com:PWIDOT/Documents/IDOT Offices/District 3/ORD Projects/D398482/CADData/CADsheets/698482-Bim-Stage 1

| | | | |
|---|---|---|---|
| USER NAME = Joseph.Zagar | DESIGNED - | REVISED - | |
| | DRAWN - | REVISED - | |
| PLOT SCALE = 100,000 ' / in. | CHECKED - | REVISED - | |
| PLOT DATE = 12/15/2023 | DATE - | REVISED - | |

**STATE OF ILLINOIS**
**DEPARTMENT OF TRANSPORTATION**

**STAGE 1 TRAFFIC CONTROL**

SCALE: SHEET 7 OF 17 SHEETS STA. TO STA.

| F.A.I RTE. | SECTION | COUNTY | TOTAL SHEETS | SHEET NO. |
|---|---|---|---|---|
| 57 | (38-6,38-5)RS,BRR,CLV | IROQUOIS | 213 | 128 |
| | | CONTRACT NO. 66H62 | | |
| | | ILLINOIS | FED. AID PROJECT | |

Long Section Number

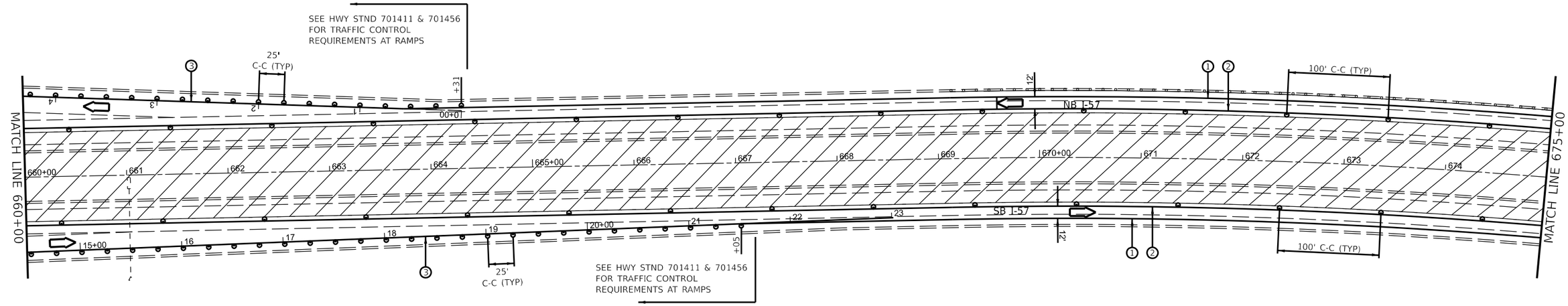


0 50 100 150
SCALE IN FEET

## LEGEND

- DIRECTION INDICATOR BARRICADE WITH STEADY BURN MONODIRECTIONAL LIGHT
- DRUMS WITH MONO-DIRECTIONAL STEADY BURNING LIGHTS
- DIRECTION OF TRAFFIC
- IMPACT ATTENUATOR, TEMPORARY (NON-REDIRECTIVE TL 3)
- TEMPORARY CONCRETE BARRIER
- ARROW BOARD
- CLASS A PATCHING UNDER STRUCTURES
- WORK ZONE
- (A) EXISTING PAVEMENT MARKING
- (1) TEMPORARY PAVEMENT MARKING MODIFIED URETHANE - WHITE
- (2) TEMPORARY PAVEMENT MARKING MODIFIED URETHANE - YELLOW
- (3) TEMPORARY PAVEMENT MARKING TYPE III TAPE - WHITE
- (4) TEMPORARY PAVEMENT MARKING TYPE III TAPE - YELLOW
- (5) SHORT TERM PAVEMENT MARKING

NOTES:
ALTERATIONS TO THE TRAFFIC CONTROL PLAN SHALL BE APPROVED BY THE ENGINEER.
USE TRAFFIC CONTROL STANDARD 701400 & 701401/701402 FOR STAGE 1 WORKZONE. USE 701411 & 701456 FOR ALL RAMPS.
(NOT ALL TRAFFIC CONTROL DEVICES & SIGNING SHOWN) ADJUST RAMP OPENINGS IF REQUIRED.

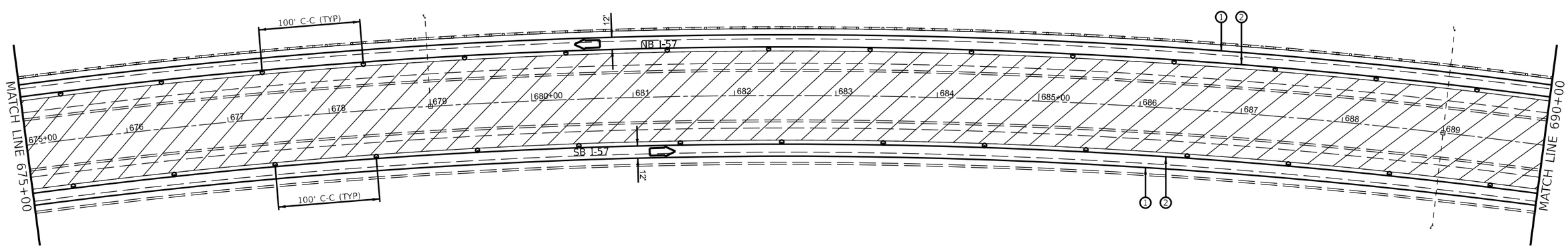


0 50 100 150
SCALE IN FEET

MODEL: Stage 1 Sheets
FILE NAME: pw://bldxpw.bentley.com:PWIDOT/Documents/IDOT Offices/District 3/ORD Projects/D398482/CADData/CADSheets/698482-Plan-Stage 1

| | | | |
|---|---|---|---|
| USER NAME = Joseph.Zagar | DESIGNED - | REVISED - | |
| | DRAWN - | REVISED - | |
| PLOT SCALE = 100,000 ' / in. | CHECKED - | REVISED - | |
| PLOT DATE = 12/15/2023 | DATE - | REVISED - | |

**STATE OF ILLINOIS**
**DEPARTMENT OF TRANSPORTATION**

**STAGE 1 TRAFFIC CONTROL**

SCALE: | SHEET 8 OF 17 SHEETS | STA. | TO STA.

| F.A.I RTE. | SECTION | COUNTY | TOTAL SHEETS | SHEET NO. |
|---|---|---|---|---|
| 57 | (38-6,38-5)RS,BRR,CLV | IROQUOIS | 213 | 129 |
| | | CONTRACT NO. 66H62 | | |
| | | ILLINOIS | FED. AID PROJECT | |

Long Section Number

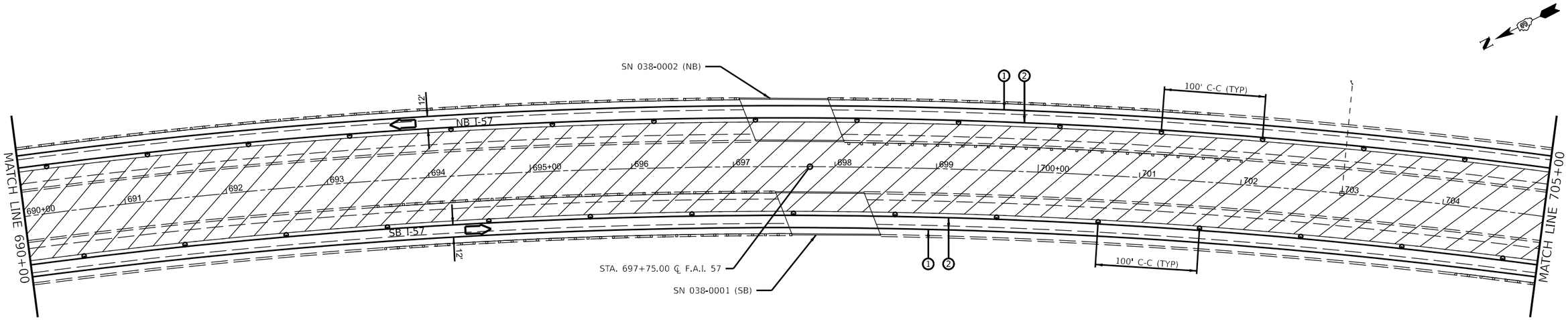


## LEGEND

- DIRECTION INDICATOR BARRICADE WITH STEADY BURN MONODIRECTIONAL LIGHT
- DRUMS WITH MONO-DIRECTIONAL STEADY BURNING LIGHTS
- DIRECTION OF TRAFFIC
- IMPACT ATTENUATOR, TEMPORARY (NON-REDIRECTIVE TL 3)
- TEMPORARY CONCRETE BARRIER
- ARROW BOARD
- CLASS A PATCHING UNDER STRUCTURES
- WORK ZONE
- (A) EXISTING PAVEMENT MARKING
- (1) TEMPORARY PAVEMENT MARKING MODIFIED URETHANE - WHITE
- (2) TEMPORARY PAVEMENT MARKING MODIFIED URETHANE - YELLOW
- (3) TEMPORARY PAVEMENT MARKING TYPE III TAPE - WHITE
- (4) TEMPORARY PAVEMENT MARKING TYPE III TAPE - YELLOW
- (5) SHORT TERM PAVEMENT MARKING

NOTES:
ALTERATIONS TO THE TRAFFIC CONTROL PLAN SHALL BE APPROVED BY THE ENGINEER.
USE TRAFFIC CONTROL STANDARD 701400 & 701401/701402 FOR STAGE 1 WORKZONE. USE 701411 & 701456 FOR ALL RAMPS.
(NOT ALL TRAFFIC CONTROL DEVICES & SIGNING SHOWN) ADJUST RAMP OPENINGS IF REQUIRED.

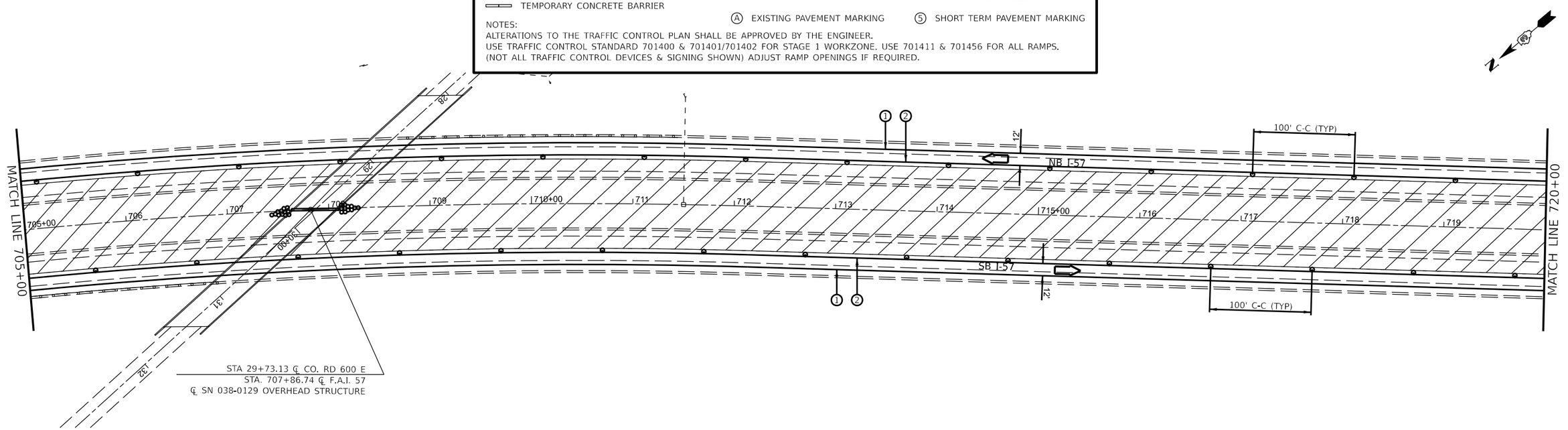


MODEL: Stage 1 Sheets
FILE NAME: pw://ildot-pw.bentley.com:PWIDOT/Documents/IDOT Offices/District 3/ORD Projects/D366H62/CADData/CADsheets/66H62-Plan-Stage 1

| | | | |
|---|---|---|---|
| USER NAME = Joseph.Zagar | DESIGNED - | REVISED - | |
| | DRAWN - | REVISED - | |
| PLOT SCALE = 100,000 ' / in. | CHECKED - | REVISED - | |
| PLOT DATE = 12/15/2023 | DATE - | REVISED - | |

**STATE OF ILLINOIS**
**DEPARTMENT OF TRANSPORTATION**

**STAGE 1 TRAFFIC CONTROL**

SCALE: | SHEET 9 OF 17 SHEETS | STA. | TO STA.

| F.A.I RTE. | SECTION | COUNTY | TOTAL SHEETS | SHEET NO. |
|---|---|---|---|---|
| 57 | (38-6,38-5)RS,BRR,CLV | IROQUOIS | 213 | 130 |
| | | CONTRACT NO. 66H62 | | |
| | | ILLINOIS | FED. AID PROJECT | |

Long Section Number

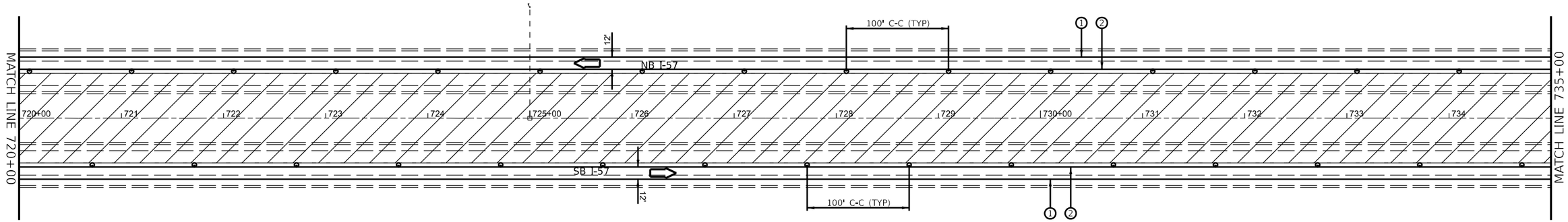


0 50 100 150
SCALE IN FEET

## LEGEND

- DIRECTION INDICATOR BARRICADE WITH STEADY BURN MONODIRECTIONAL LIGHT
- DRUMS WITH MONO-DIRECTIONAL STEADY BURNING LIGHTS
- DIRECTION OF TRAFFIC
- IMPACT ATTENUATOR, TEMPORARY (NON-REDIRECTIVE TL 3)
- TEMPORARY CONCRETE BARRIER
- ARROW BOARD
- CLASS A PATCHING UNDER STRUCTURES
- WORK ZONE
- (A) EXISTING PAVEMENT MARKING
- (1) TEMPORARY PAVEMENT MARKING MODIFIED URETHANE - WHITE
- (2) TEMPORARY PAVEMENT MARKING MODIFIED URETHANE - YELLOW
- (3) TEMPORARY PAVEMENT MARKING TYPE III TAPE - WHITE
- (4) TEMPORARY PAVEMENT MARKING TYPE III TAPE - YELLOW
- (5) SHORT TERM PAVEMENT MARKING

NOTES:
ALTERATIONS TO THE TRAFFIC CONTROL PLAN SHALL BE APPROVED BY THE ENGINEER.
USE TRAFFIC CONTROL STANDARD 701400 & 701401/701402 FOR STAGE 1 WORKZONE. USE 701411 & 701456 FOR ALL RAMPS.
(NOT ALL TRAFFIC CONTROL DEVICES & SIGNING SHOWN) ADJUST RAMP OPENINGS IF REQUIRED.

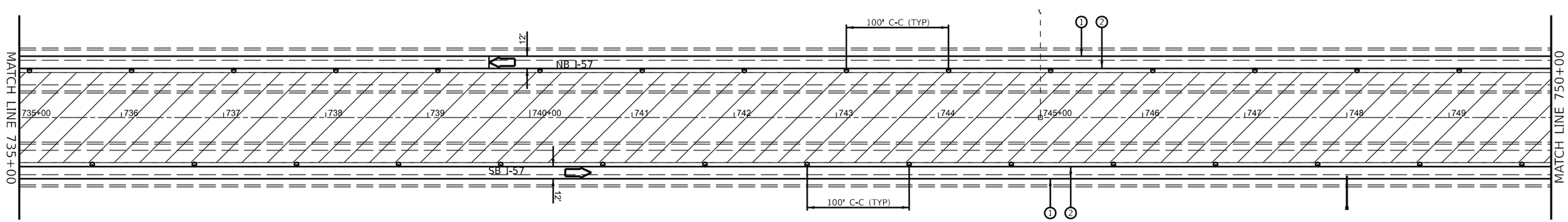


0 50 100 150
SCALE IN FEET

MODEL: Stage 1 Sheets
FILE NAME: pw://bldxpw.bentley.com:PWIDOT/Documents/IDOT Offices/District 3/ORD Projects/D398482/CADData/CADsheets/66H62-Plan-Stage 1

| | | | |
|---|---|---|---|
| USER NAME = Joseph.Zagar | DESIGNED - | REVISED - | |
| | DRAWN - | REVISED - | |
| PLOT SCALE = 100,000 ' / in. | CHECKED - | REVISED - | |
| PLOT DATE = 12/15/2023 | DATE - | REVISED - | |

**STATE OF ILLINOIS**
**DEPARTMENT OF TRANSPORTATION**

**STAGE 1 TRAFFIC CONTROL**

SCALE: | SHEET 10 OF 17 SHEETS | STA. | TO STA.

| F.A.I RTE. | SECTION | COUNTY | TOTAL SHEETS | SHEET NO. |
|---|---|---|---|---|
| 57 | (38-6,38-5)RS,BRR,CLV | IROQUOIS | 213 | 131 |
| | | CONTRACT NO. 66H62 | | |
| | ILLINOIS | FED. AID PROJECT | | |

Long Section Number

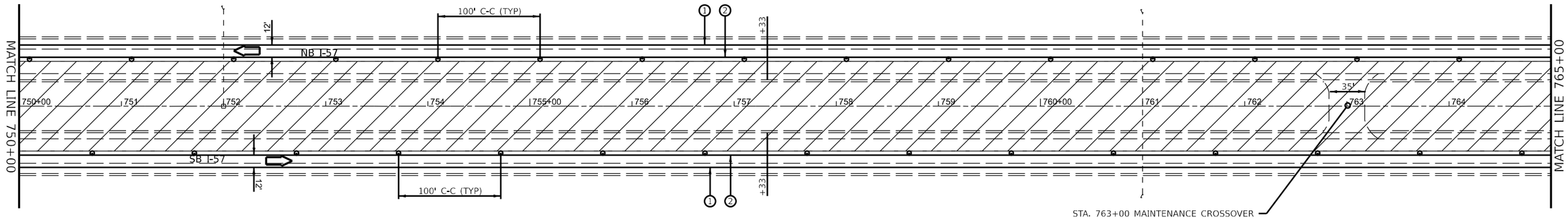


0 50 100 150
SCALE IN FEET

## LEGEND

- DIRECTION INDICATOR BARRICADE WITH STEADY BURN MONODIRECTIONAL LIGHT
- DRUMS WITH MONO-DIRECTIONAL STEADY BURNING LIGHTS
- DIRECTION OF TRAFFIC
- IMPACT ATTENUATOR, TEMPORARY (NON-REDIRECTIVE TL 3)
- TEMPORARY CONCRETE BARRIER
- ARROW BOARD
- CLASS A PATCHING UNDER STRUCTURES
- WORK ZONE
- (A) EXISTING PAVEMENT MARKING
- (1) TEMPORARY PAVEMENT MARKING MODIFIED URETHANE - WHITE
- (2) TEMPORARY PAVEMENT MARKING MODIFIED URETHANE - YELLOW
- (3) TEMPORARY PAVEMENT MARKING TYPE III TAPE - WHITE
- (4) TEMPORARY PAVEMENT MARKING TYPE III TAPE - YELLOW
- (5) SHORT TERM PAVEMENT MARKING

NOTES:
ALTERATIONS TO THE TRAFFIC CONTROL PLAN SHALL BE APPROVED BY THE ENGINEER.
USE TRAFFIC CONTROL STANDARD 701400 & 701401/701402 FOR STAGE 1 WORKZONE. USE 701411 & 701456 FOR ALL RAMPS.
(NOT ALL TRAFFIC CONTROL DEVICES & SIGNING SHOWN) ADJUST RAMP OPENINGS IF REQUIRED.

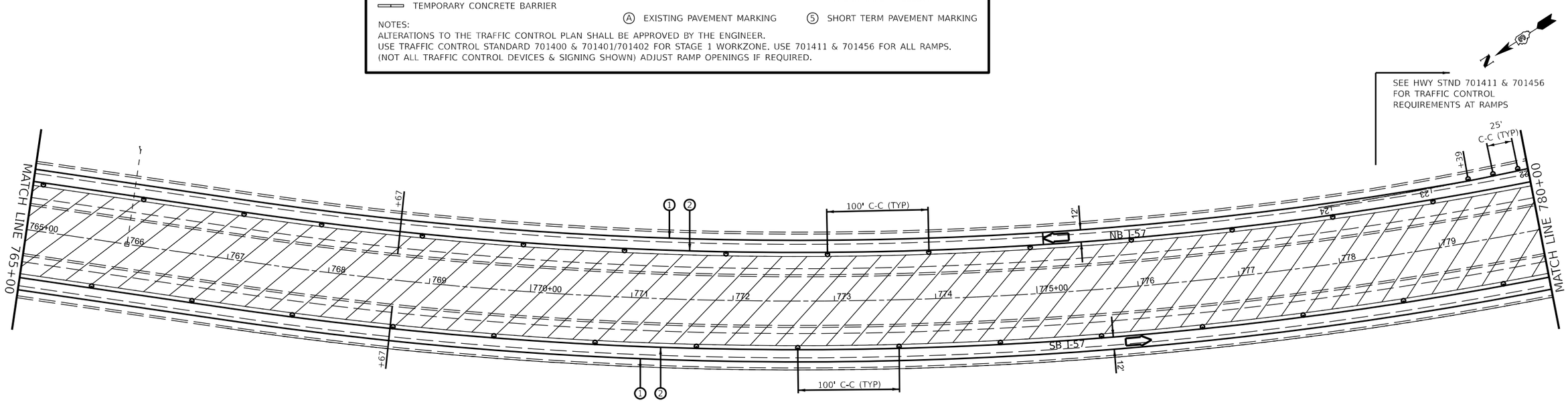


0 50 100 150
SCALE IN FEET

MODEL: Stage 1 Sheets
FILE NAME: pw://ildot-pw.bentley.com:PWIDOT/Documents/IDOT Offices/District 3/ORD Projects/D366H62/CADData/CADsheets/66H62-Plan-Stage 1

| | | | |
|---|---|---|---|
| USER NAME = Joseph.Zagar | DESIGNED - | REVISED - | |
| | DRAWN - | REVISED - | |
| PLOT SCALE = 100.000 ' / in. | CHECKED - | REVISED - | |
| PLOT DATE = 12/15/2023 | DATE - | REVISED - | |

**STATE OF ILLINOIS**
**DEPARTMENT OF TRANSPORTATION**

**STAGE 1 TRAFFIC CONTROL**

SCALE: | SHEET 11 OF 17 SHEETS | STA. | TO STA.

| F.A.I RTE. | SECTION | COUNTY | TOTAL SHEETS | SHEET NO. |
|---|---|---|---|---|
| 57 | (38-6,38-5)RS,BRR,CLV | IROQUOIS | 213 | 132 |
| | | CONTRACT NO. 66H62 | | |
| | | ILLINOIS | FED. AID PROJECT | |

Long Section Number

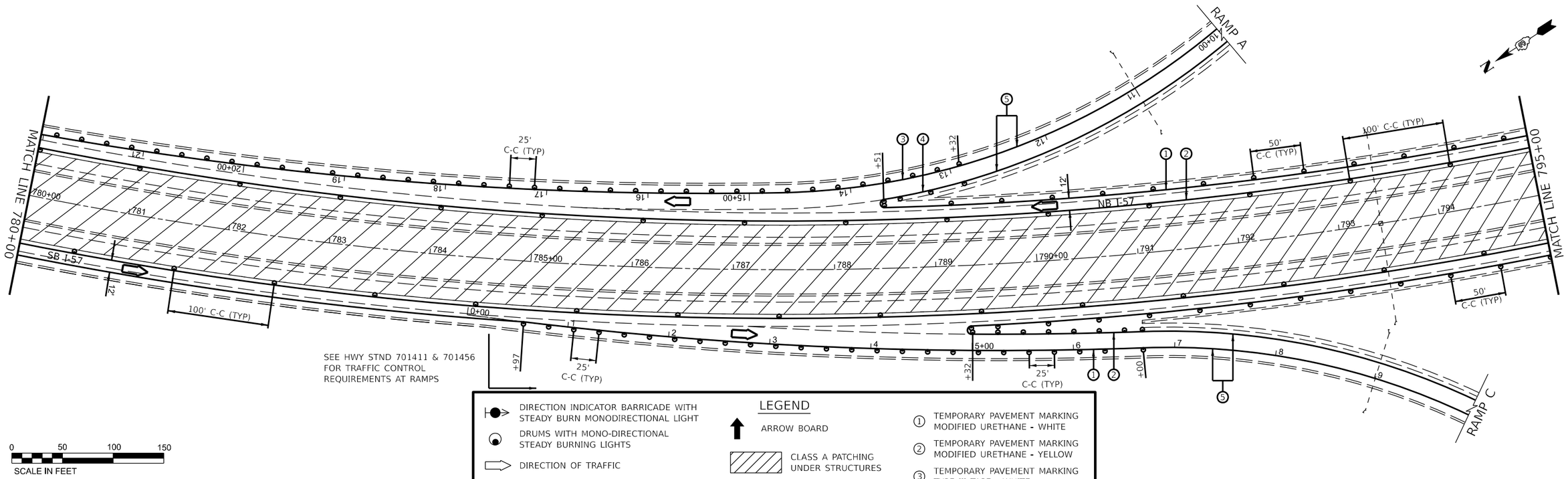


## LEGEND

- DIRECTION INDICATOR BARRICADE WITH STEADY BURN MONODIRECTIONAL LIGHT
- DRUMS WITH MONO-DIRECTIONAL STEADY BURNING LIGHTS
- DIRECTION OF TRAFFIC
- IMPACT ATTENUATOR, TEMPORARY (NON-REDIRECTIVE TL 3)
- TEMPORARY CONCRETE BARRIER
- ARROW BOARD
- CLASS A PATCHING UNDER STRUCTURES
- WORK ZONE
- (A) EXISTING PAVEMENT MARKING
- (1) TEMPORARY PAVEMENT MARKING MODIFIED URETHANE - WHITE
- (2) TEMPORARY PAVEMENT MARKING MODIFIED URETHANE - YELLOW
- (3) TEMPORARY PAVEMENT MARKING TYPE III TAPE - WHITE
- (4) TEMPORARY PAVEMENT MARKING TYPE III TAPE - YELLOW
- (5) SHORT TERM PAVEMENT MARKING

NOTES:
ALTERATIONS TO THE TRAFFIC CONTROL PLAN SHALL BE APPROVED BY THE ENGINEER.
USE TRAFFIC CONTROL STANDARD 701400 & 701401/701402 FOR STAGE 1 WORKZONE. USE 701411 & 701456 FOR ALL RAMPS.
(NOT ALL TRAFFIC CONTROL DEVICES & SIGNING SHOWN) ADJUST RAMP OPENINGS IF REQUIRED.

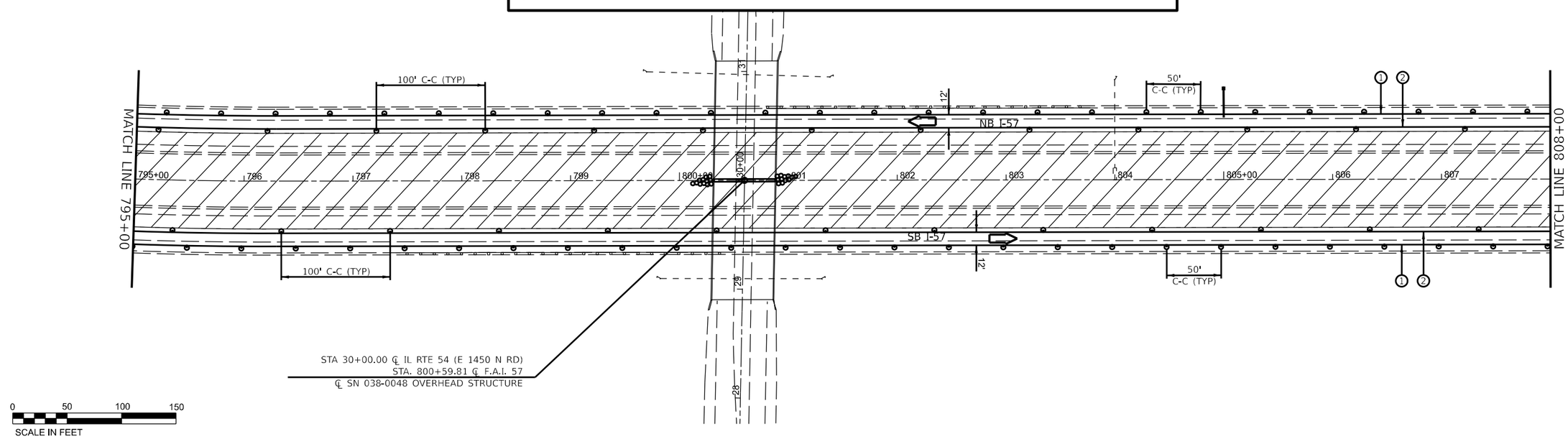


| | | | |
|---|---|---|---|
| USER NAME = Joseph.Zagar | DESIGNED - | REVISED - | STATE OF ILLINOIS DEPARTMENT OF TRANSPORTATION |
| | DRAWN - | REVISED - | |
| PLOT SCALE = 100,000 ' / in. | CHECKED - | REVISED - | |
| PLOT DATE = 12/15/2023 | DATE - | REVISED - | |

**STAGE 1 TRAFFIC CONTROL**

SCALE: SHEET 12 OF 17 SHEETS STA. TO STA.

| F.A.I RTE. | SECTION | COUNTY | TOTAL SHEETS | SHEET NO. |
|---|---|---|---|---|
| 57 | (38-6,38-5)RS,BRR,CLV | IROQUOIS | 213 | 133 |

CONTRACT NO. 66H62

ILLINOIS FED. AID PROJECT

Long Section Number

MODEL: Stage 1 Sheets
FILE NAME: pw://bldxpw.bentley.com:PWIDOT/Documents/IDOT Offices/District 3/ORD Projects/D398482/CADData/CADsheets/698482-Bim-Stage 1

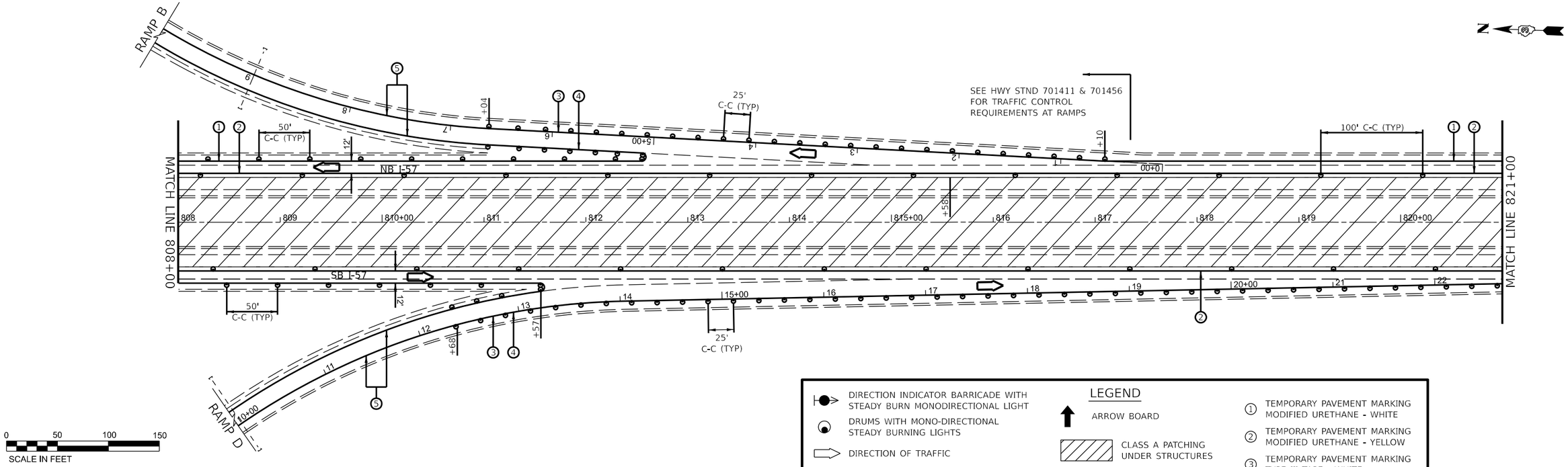


MODEL: Stage 1 Sheets
FILE NAME: pw://ildot-pw.bentley.com:PWIDOT/Documents/IDOT Offices/District 3/ORD Projects/D366H62/CADData/CADsheets/66H62-Plan-Stage 1

| | | | |
|---|---|---|---|
| USER NAME = Joseph.Zagar | DESIGNED - | REVISED - | |
| | DRAWN - | REVISED - | |
| PLOT SCALE = 100.000 ' / in. | CHECKED - | REVISED - | |
| PLOT DATE = 12/15/2023 | DATE - | REVISED - | |

**STATE OF ILLINOIS**
**DEPARTMENT OF TRANSPORTATION**

**STAGE 1 TRAFFIC CONTROL**

SCALE: | SHEET 13 OF 17 SHEETS | STA. | TO STA.

| F.A.I RTE. | SECTION | COUNTY | TOTAL SHEETS | SHEET NO. |
|---|---|---|---|---|
| 57 | (38-6,38-5)RS,BRR,CLV | IROQUOIS | 213 | 134 |
| | | CONTRACT NO. 66H62 | | |
| | | ILLINOIS | FED. AID PROJECT | |

Long Section Number

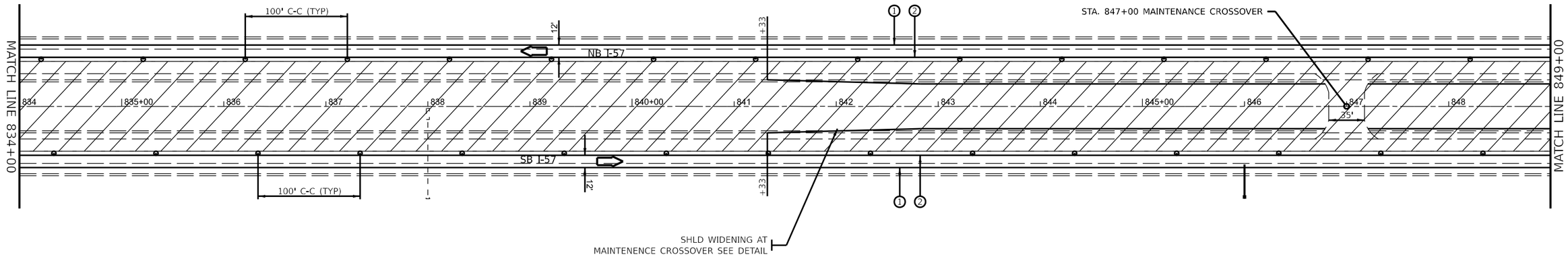


## LEGEND

- DIRECTION INDICATOR BARRICADE WITH STEADY BURN MONODIRECTIONAL LIGHT
- DRUMS WITH MONO-DIRECTIONAL STEADY BURNING LIGHTS
- DIRECTION OF TRAFFIC
- IMPACT ATTENUATOR, TEMPORARY (NON-REDIRECTIVE TL 3)
- TEMPORARY CONCRETE BARRIER
- ARROW BOARD
- CLASS A PATCHING UNDER STRUCTURES
- WORK ZONE
- (A) EXISTING PAVEMENT MARKING
- (1) TEMPORARY PAVEMENT MARKING MODIFIED URETHANE - WHITE
- (2) TEMPORARY PAVEMENT MARKING MODIFIED URETHANE - YELLOW
- (3) TEMPORARY PAVEMENT MARKING TYPE III TAPE - WHITE
- (4) TEMPORARY PAVEMENT MARKING TYPE III TAPE - YELLOW
- (5) SHORT TERM PAVEMENT MARKING

NOTES:
ALTERATIONS TO THE TRAFFIC CONTROL PLAN SHALL BE APPROVED BY THE ENGINEER.
USE TRAFFIC CONTROL STANDARD 701400 & 701401/701402 FOR STAGE 1 WORKZONE. USE 701411 & 701456 FOR ALL RAMPS.
(NOT ALL TRAFFIC CONTROL DEVICES & SIGNING SHOWN) ADJUST RAMP OPENINGS IF REQUIRED.

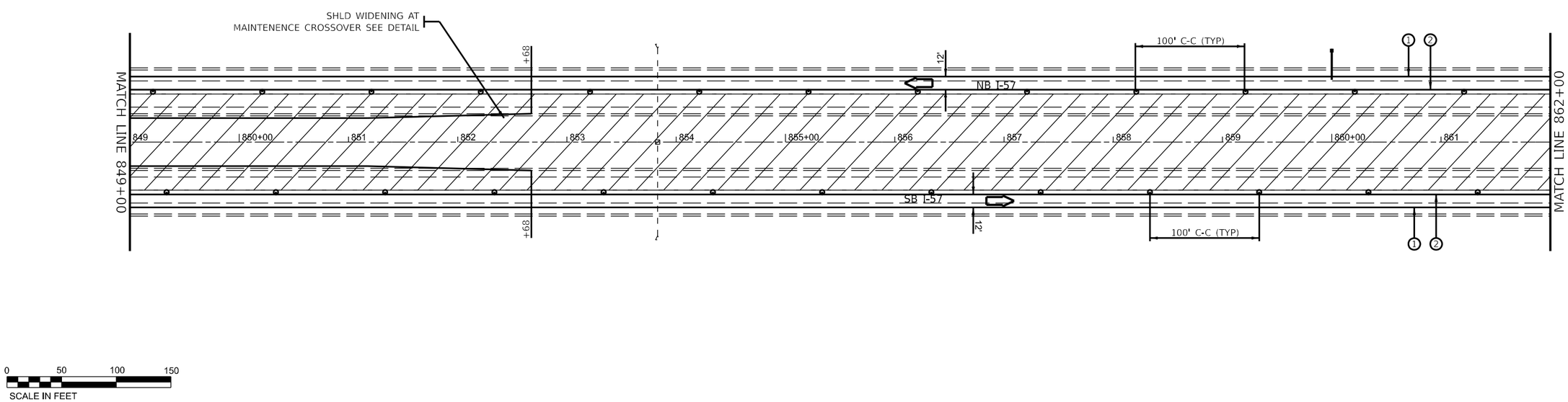


MODEL: Stage 1 Sheets
FILE NAME: pw://ildot-pw.bentley.com:PWIDOT/Documents/IDOT Offices/District 3/ORD Projects/D366H62/CADData/CADsheets/66H62-Plan-Stage 1

| | | | |
|---|---|---|---|
| USER NAME = Joseph.Zagar | DESIGNED - | REVISED - | STATE OF ILLINOIS DEPARTMENT OF TRANSPORTATION |
| | DRAWN - | REVISED - | |
| PLOT SCALE = 100,000 ' / in. | CHECKED - | REVISED - | |
| PLOT DATE = 12/15/2023 | DATE - | REVISED - | |

**STAGE 1 TRAFFIC CONTROL**

SCALE: | SHEET 14 OF 17 SHEETS | STA. | TO STA.

| F.A.I RTE. | SECTION | COUNTY | TOTAL SHEETS | SHEET NO. |
|---|---|---|---|---|
| 57 | (38-6,38-5)RS,BRR,CLV | IROQUOIS | 213 | 135 |
| | | CONTRACT NO. 66H62 | | |
| | | ILLINOIS FED. AID PROJECT | | |

Long Section Number

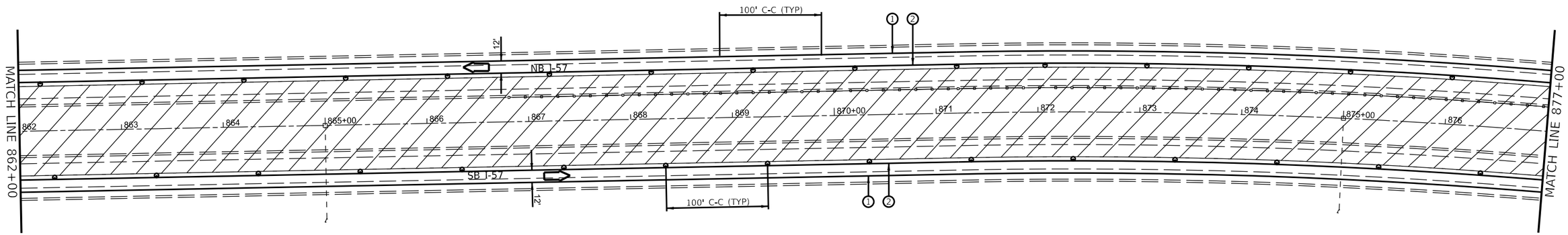


0 50 100 150
SCALE IN FEET

## LEGEND

- DIRECTION INDICATOR BARRICADE WITH STEADY BURN MONODIRECTIONAL LIGHT
- DRUMS WITH MONO-DIRECTIONAL STEADY BURNING LIGHTS
- DIRECTION OF TRAFFIC
- IMPACT ATTENUATOR, TEMPORARY (NON-REDIRECTIVE TL 3)
- TEMPORARY CONCRETE BARRIER
- ARROW BOARD
- CLASS A PATCHING UNDER STRUCTURES
- WORK ZONE
- (A) EXISTING PAVEMENT MARKING
- (1) TEMPORARY PAVEMENT MARKING MODIFIED URETHANE - WHITE
- (2) TEMPORARY PAVEMENT MARKING MODIFIED URETHANE - YELLOW
- (3) TEMPORARY PAVEMENT MARKING TYPE III TAPE - WHITE
- (4) TEMPORARY PAVEMENT MARKING TYPE III TAPE - YELLOW
- (5) SHORT TERM PAVEMENT MARKING

NOTES:
ALTERATIONS TO THE TRAFFIC CONTROL PLAN SHALL BE APPROVED BY THE ENGINEER.
USE TRAFFIC CONTROL STANDARD 701400 & 701401/701402 FOR STAGE 1 WORKZONE. USE 701411 & 701456 FOR ALL RAMPS.
(NOT ALL TRAFFIC CONTROL DEVICES & SIGNING SHOWN) ADJUST RAMP OPENINGS IF REQUIRED.

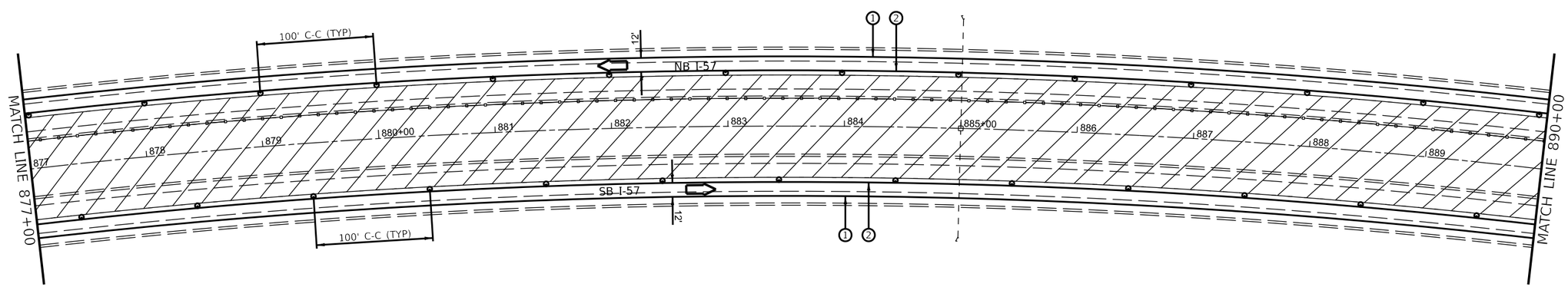


0 50 100 150
SCALE IN FEET

MODEL: Stage 1 Sheets
FILE NAME: pw://filebow.bentley.com:PWIDOT/Documents/IDOT Offices/District 3/ORD Projects/D398H62/CADData/CADsheets/66H62-Plan-Stage 1

| | | | |
|---|---|---|---|
| USER NAME = Joseph.Zagar | DESIGNED - | REVISED - | |
| | DRAWN - | REVISED - | |
| PLOT SCALE = 100,000 ' / in. | CHECKED - | REVISED - | |
| PLOT DATE = 12/15/2023 | DATE - | REVISED - | |

**STATE OF ILLINOIS**
**DEPARTMENT OF TRANSPORTATION**

**STAGE 1 TRAFFIC CONTROL**

SCALE: SHEET 15 OF 17 SHEETS STA. TO STA.

| F.A.I RTE. | SECTION | COUNTY | TOTAL SHEETS | SHEET NO. |
|---|---|---|---|---|
| 57 | (38-6,38-5)RS,BRR,CLV | IROQUOIS | 213 | 136 |

CONTRACT NO. 66H62

ILLINOIS FED. AID PROJECT

Long Section Number

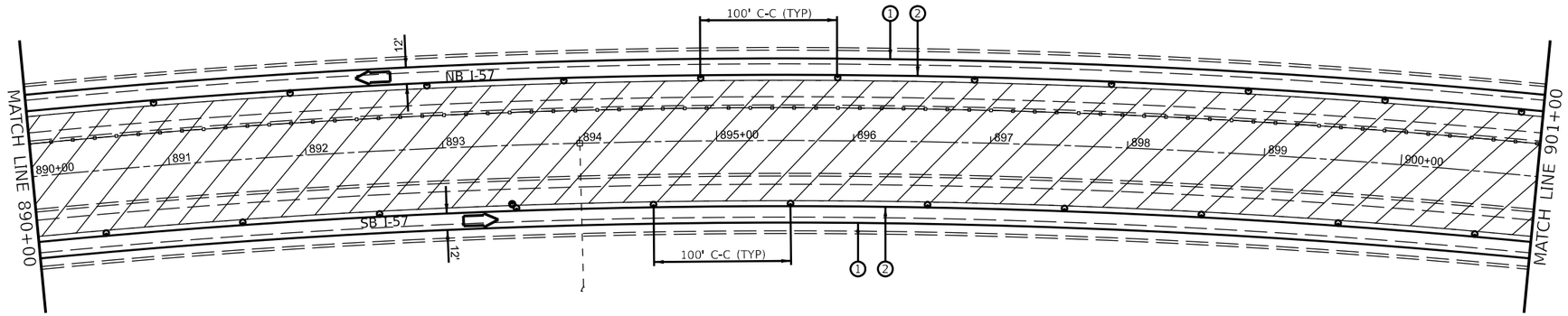


0 50 100 150
SCALE IN FEET

## LEGEND

- DIRECTION INDICATOR BARRICADE WITH STEADY BURN MONODIRECTIONAL LIGHT
- DRUMS WITH MONO-DIRECTIONAL STEADY BURNING LIGHTS
- DIRECTION OF TRAFFIC
- IMPACT ATTENUATOR, TEMPORARY (NON-REDIRECTIVE TL 3)
- TEMPORARY CONCRETE BARRIER
- ARROW BOARD
- CLASS A PATCHING UNDER STRUCTURES
- WORK ZONE
- (A) EXISTING PAVEMENT MARKING
- (1) TEMPORARY PAVEMENT MARKING MODIFIED URETHANE - WHITE
- (2) TEMPORARY PAVEMENT MARKING MODIFIED URETHANE - YELLOW
- (3) TEMPORARY PAVEMENT MARKING TYPE III TAPE - WHITE
- (4) TEMPORARY PAVEMENT MARKING TYPE III TAPE - YELLOW
- (5) SHORT TERM PAVEMENT MARKING

NOTES:
ALTERATIONS TO THE TRAFFIC CONTROL PLAN SHALL BE APPROVED BY THE ENGINEER.
USE TRAFFIC CONTROL STANDARD 701400 & 701401/701402 FOR STAGE 1 WORKZONE. USE 701411 & 701456 FOR ALL RAMPS.
(NOT ALL TRAFFIC CONTROL DEVICES & SIGNING SHOWN) ADJUST RAMP OPENINGS IF REQUIRED.

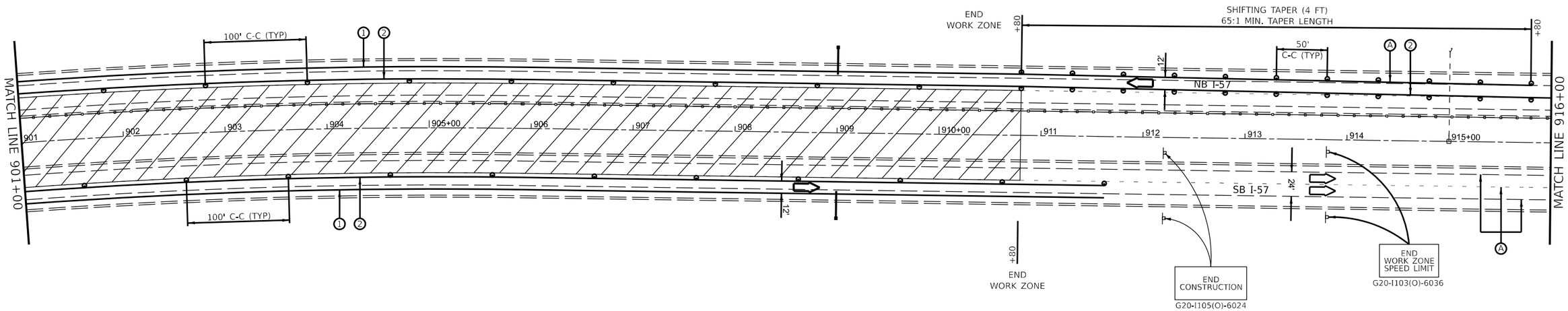


0 50 100 150
SCALE IN FEET

MODEL: Stage 1 Sheets
FILE NAME: pw://ildot-pw.bentley.com:PWIDOT/Documents/IDOT Offices/District 3/ORD Projects/D366H62/CADData/CADsheets/66H62-Plan-Stage 1

| | | | |
|---|---|---|---|
| USER NAME = Joseph.Zagar | DESIGNED - | REVISED - | |
| | DRAWN - | REVISED - | |
| PLOT SCALE = 100.000 ' / in. | CHECKED - | REVISED - | |
| PLOT DATE = 12/15/2023 | DATE - | REVISED - | |

**STATE OF ILLINOIS**
**DEPARTMENT OF TRANSPORTATION**

**STAGE 1 TRAFFIC CONTROL**

SCALE: | SHEET 16 OF 17 SHEETS | STA. | TO STA.

| F.A.I RTE. | SECTION | COUNTY | TOTAL SHEETS | SHEET NO. |
|---|---|---|---|---|
| 57 | (38-6,38-5)RS,BRR,CLV | IROQUOIS | 213 | 137 |
| | | CONTRACT NO. 66H62 | | |
| | | ILLINOIS | FED. AID PROJECT | |

Long Section Number

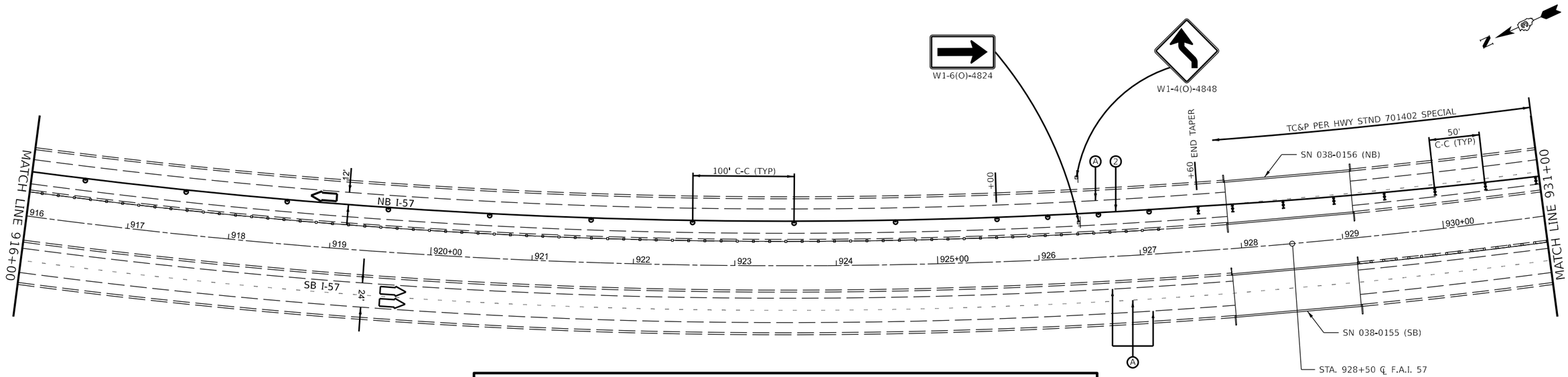


0 50 100 150
SCALE IN FEET

## LEGEND

- DIRECTION INDICATOR BARRICADE WITH STEADY BURN MONODIRECTIONAL LIGHT
- DRUMS WITH MONO-DIRECTIONAL STEADY BURNING LIGHTS
- DIRECTION OF TRAFFIC
- IMPACT ATTENUATOR, TEMPORARY (NON-REDIRECTIVE TL 3)
- TEMPORARY CONCRETE BARRIER
- ARROW BOARD
- CLASS A PATCHING UNDER STRUCTURES
- WORK ZONE
- (A) EXISTING PAVEMENT MARKING
- (1) TEMPORARY PAVEMENT MARKING MODIFIED URETHANE - WHITE
- (2) TEMPORARY PAVEMENT MARKING MODIFIED URETHANE - YELLOW
- (3) TEMPORARY PAVEMENT MARKING TYPE III TAPE - WHITE
- (4) TEMPORARY PAVEMENT MARKING TYPE III TAPE - YELLOW
- (5) SHORT TERM PAVEMENT MARKING

NOTES:
ALTERATIONS TO THE TRAFFIC CONTROL PLAN SHALL BE APPROVED BY THE ENGINEER.
USE TRAFFIC CONTROL STANDARD 701400 & 701401/701402 FOR STAGE 1 WORKZONE. USE 701411 & 701456 FOR ALL RAMPS.
(NOT ALL TRAFFIC CONTROL DEVICES & SIGNING SHOWN) ADJUST RAMP OPENINGS IF REQUIRED.

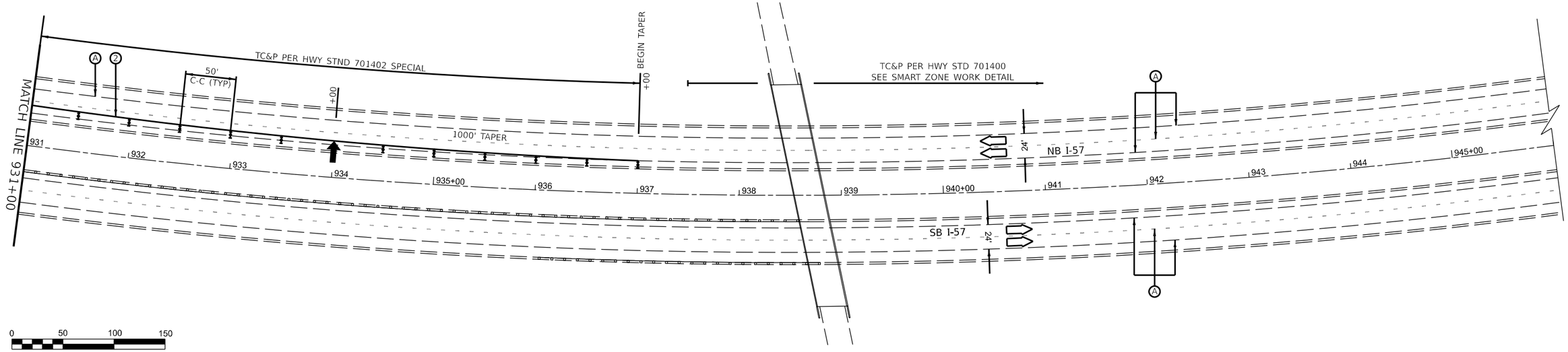


0 50 100 150
SCALE IN FEET

MODEL: Stage 1 Sheets
FILE NAME: pw://ildot-pw.bentley.com:PWIDOT/Documents/IDOT Offices/District 3/ORD Projects/D398H62/CADData/CADsheets/66H62-PlanStage 1

| | | | |
|---|---|---|---|
| USER NAME = Joseph.Zagar | DESIGNED - | REVISED - | |
| | DRAWN - | REVISED - | |
| PLOT SCALE = 100.000 ' / in. | CHECKED - | REVISED - | |
| PLOT DATE = 12/15/2023 | DATE - | REVISED - | |

**STATE OF ILLINOIS**
**DEPARTMENT OF TRANSPORTATION**

**STAGE 1 TRAFFIC CONTROL**

SCALE: | SHEET 17 OF 17 SHEETS | STA. | TO STA.

| F.A.I RTE. | SECTION | COUNTY | TOTAL SHEETS | SHEET NO. |
|---|---|---|---|---|
| 57 | (38-6,38-5)RS,BRR,CLV | IROQUOIS | 213 | 138 |

CONTRACT NO. 66H62

ILLINOIS | FED. AID PROJECT

Long Section Number

## LEGEND

- DIRECTION INDICATOR BARRICADE WITH STEADY BURN MONODIRECTIONAL LIGHT
- DRUMS WITH MONO-DIRECTIONAL STEADY BURNING LIGHTS
- DIRECTION OF TRAFFIC
- IMPACT ATTENUATOR, TEMPORARY (NON-REDIRECTIVE TL 3)
- TEMPORARY CONCRETE BARRIER
- ARROW BOARD
- CLASS A PATCHING UNDER STRUCTURES
- WORK ZONE
- (A) EXISTING PAVEMENT MARKING
- (1) TEMPORARY PAVEMENT MARKING MODIFIED URETHANE - WHITE
- (2) TEMPORARY PAVEMENT MARKING MODIFIED URETHANE - YELLOW
- (3) TEMPORARY PAVEMENT MARKING TYPE III TAPE - WHITE
- (4) TEMPORARY PAVEMENT MARKING TYPE III TAPE - YELLOW
- (5) SHORT TERM PAVEMENT MARKING

NOTES:
ALTERATIONS TO THE TRAFFIC CONTROL PLAN SHALL BE APPROVED BY THE ENGINEER.
USE TRAFFIC CONTROL STANDARDS 701400, 701401/701402 & 701406 FOR STAGE 2 WORKZONE. USE 701411 & 701456 FOR ALL RAMPS.
(NOT ALL TRAFFIC CONTROL DEVICES & SIGNING SHOWN) ADJUST RAMP OPENINGS IF REQUIRED.

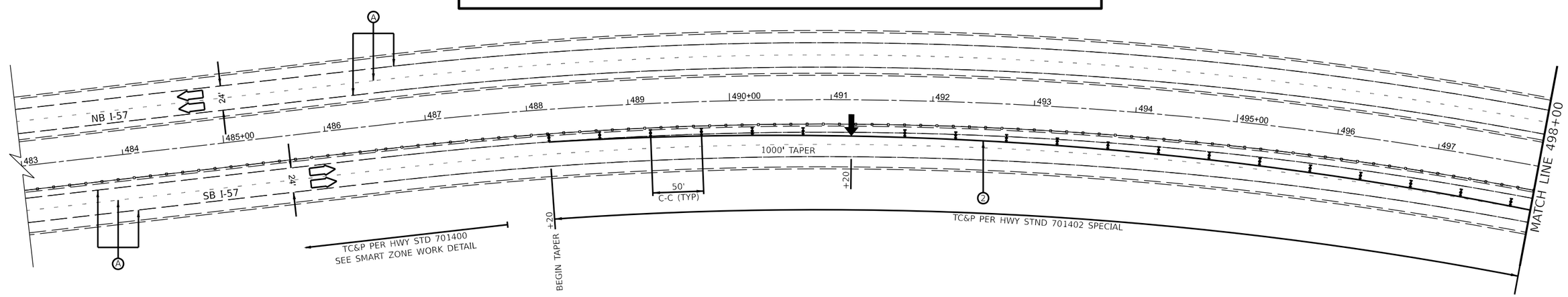


0 50 100 150
SCALE IN FEET

MODEL: STAGE 2 PLAN SHEETS
FILE NAME: pw://bikow.bentley.com:PWIDOT/Documents/IDOT Offices/District 3/ORD Projects/D396H62/CADData/CADsheets/66H62-PlanStage 2

| | | | |
|---|---|---|---|
| USER NAME = Joseph.Zagar | DESIGNED - | REVISED - | |
| | DRAWN - | REVISED - | |
| PLOT SCALE = 100,000 ' / in. | CHECKED - | REVISED - | |
| PLOT DATE = 12/15/2023 | DATE - | REVISED - | |

**STATE OF ILLINOIS**
**DEPARTMENT OF TRANSPORTATION**

**STAGE 2 TRAFFIC CONTROL**

SCALE: | SHEET 1 OF 17 SHEETS | STA. | TO STA.

| F.A.I RTE. | SECTION | COUNTY | TOTAL SHEETS | SHEET NO. |
|---|---|---|---|---|
| 57 | (38-6,38-5)RS,BRR,CLV | IROQUOIS | 213 | 139 |
| | | CONTRACT NO. 66H62 | | |
| | ILLINOIS | FED. AID PROJECT | | |

Long Section Number

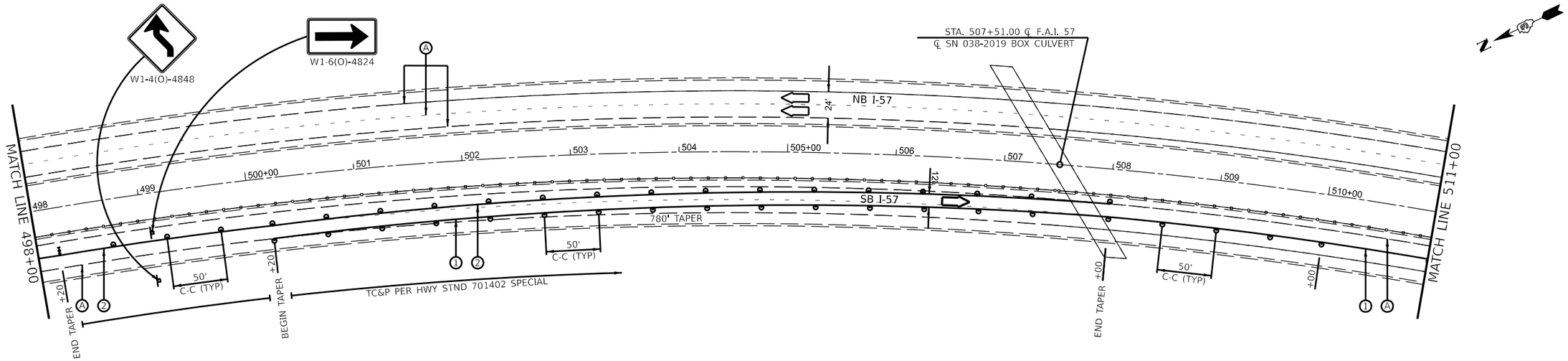


0 50 100 150
SCALE IN FEET

## LEGEND

- DIRECTION INDICATOR BARRICADE WITH STEADY BURN MONODIRECTIONAL LIGHT
- DRUMS WITH MONO-DIRECTIONAL STEADY BURNING LIGHTS
- DIRECTION OF TRAFFIC
- IMPACT ATTENUATOR, TEMPORARY (NON-REDIRECTIVE TL 3)
- TEMPORARY CONCRETE BARRIER
- ARROW BOARD
- CLASS A PATCHING UNDER STRUCTURES
- WORK ZONE
- (A) EXISTING PAVEMENT MARKING
- (1) TEMPORARY PAVEMENT MARKING MODIFIED URETHANE - WHITE
- (2) TEMPORARY PAVEMENT MARKING MODIFIED URETHANE - YELLOW
- (3) TEMPORARY PAVEMENT MARKING TYPE III TAPE - WHITE
- (4) TEMPORARY PAVEMENT MARKING TYPE III TAPE - YELLOW
- (5) SHORT TERM PAVEMENT MARKING

NOTES:
ALTERATIONS TO THE TRAFFIC CONTROL PLAN SHALL BE APPROVED BY THE ENGINEER.
USE TRAFFIC CONTROL STANDARDS 701400, 701401/701402 & 701406 FOR STAGE 2 WORKZONE. USE 701411 & 701456 FOR ALL RAMPS.
(NOT ALL TRAFFIC CONTROL DEVICES & SIGNING SHOWN) ADJUST RAMP OPENINGS IF REQUIRED.

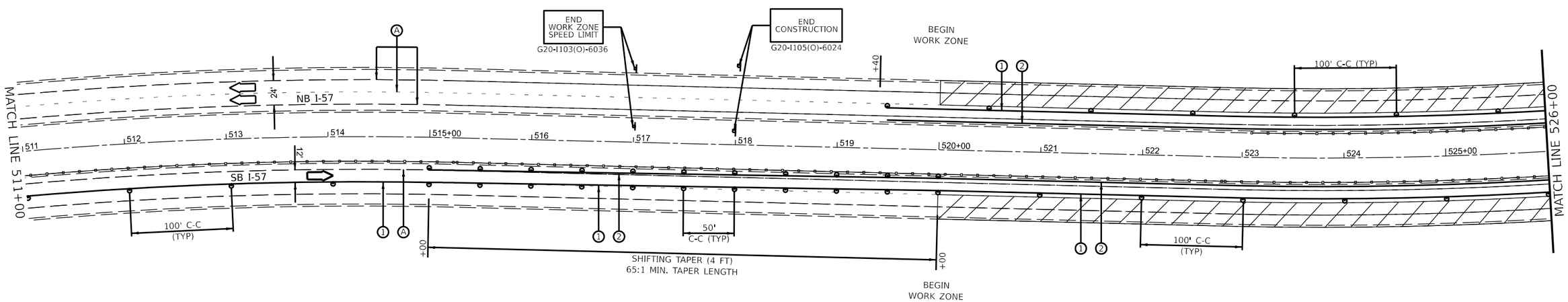


0 50 100 150
SCALE IN FEET

MODEL: STAGE 2 PLAN SHEETS
FILE NAME: pw://ildot-pw.bentley.com:PWIDOT/Documents/IDOT Offices/District 3/ORD Projects/D366H62/CADData/CADsheets/66H62-Plan-Stage 2

| | | | |
|---|---|---|---|
| USER NAME = Joseph.Zagar | DESIGNED - | REVISED - | |
| | DRAWN - | REVISED - | |
| PLOT SCALE = 100.000 ' / in. | CHECKED - | REVISED - | |
| PLOT DATE = 12/15/2023 | DATE - | REVISED - | |

**STATE OF ILLINOIS**
**DEPARTMENT OF TRANSPORTATION**

**STAGE 2 TRAFFIC CONTROL**

SCALE: SHEET 2 OF 17 SHEETS STA. TO STA.

| F.A.I RTE. | SECTION | COUNTY | TOTAL SHEETS | SHEET NO. |
|---|---|---|---|---|
| 57 | (38-6,38-5)RS,BRR,CLV | IROQUOIS | 213 | 140 |
| | | CONTRACT NO. 66H62 | | |
| | | ILLINOIS FED. AID PROJECT | | |

Long Section Number

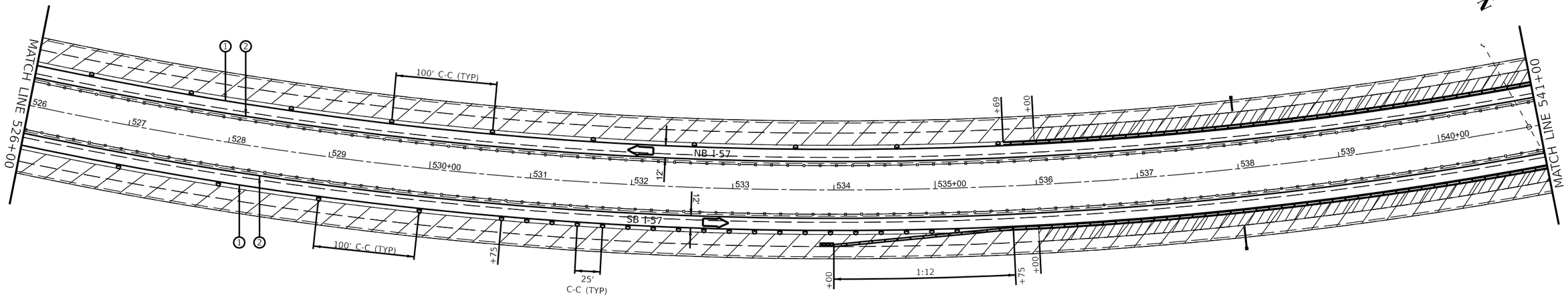


0 50 100 150
SCALE IN FEET

## LEGEND

- DIRECTION INDICATOR BARRICADE WITH STEADY BURN MONODIRECTIONAL LIGHT
- DRUMS WITH MONO-DIRECTIONAL STEADY BURNING LIGHTS
- DIRECTION OF TRAFFIC
- IMPACT ATTENUATOR, TEMPORARY (NON-REDIRECTIVE TL 3)
- TEMPORARY CONCRETE BARRIER
- ARROW BOARD
- CLASS A PATCHING UNDER STRUCTURES
- WORK ZONE
- (A) EXISTING PAVEMENT MARKING
- (1) TEMPORARY PAVEMENT MARKING MODIFIED URETHANE - WHITE
- (2) TEMPORARY PAVEMENT MARKING MODIFIED URETHANE - YELLOW
- (3) TEMPORARY PAVEMENT MARKING TYPE III TAPE - WHITE
- (4) TEMPORARY PAVEMENT MARKING TYPE III TAPE - YELLOW
- (5) SHORT TERM PAVEMENT MARKING

NOTES:
ALTERATIONS TO THE TRAFFIC CONTROL PLAN SHALL BE APPROVED BY THE ENGINEER.
USE TRAFFIC CONTROL STANDARDS 701400, 701401/701402 & 701406 FOR STAGE 2 WORKZONE. USE 701411 & 701456 FOR ALL RAMPS.
(NOT ALL TRAFFIC CONTROL DEVICES & SIGNING SHOWN) ADJUST RAMP OPENINGS IF REQUIRED.

STA 30+00.00 ℄ F.A.S. RTE 338 (E 1900 N RD)
STA. 541+66.36 ℄ F.A.I. 57
℄ SN 038-0086 OVERHEAD STRUCTURE

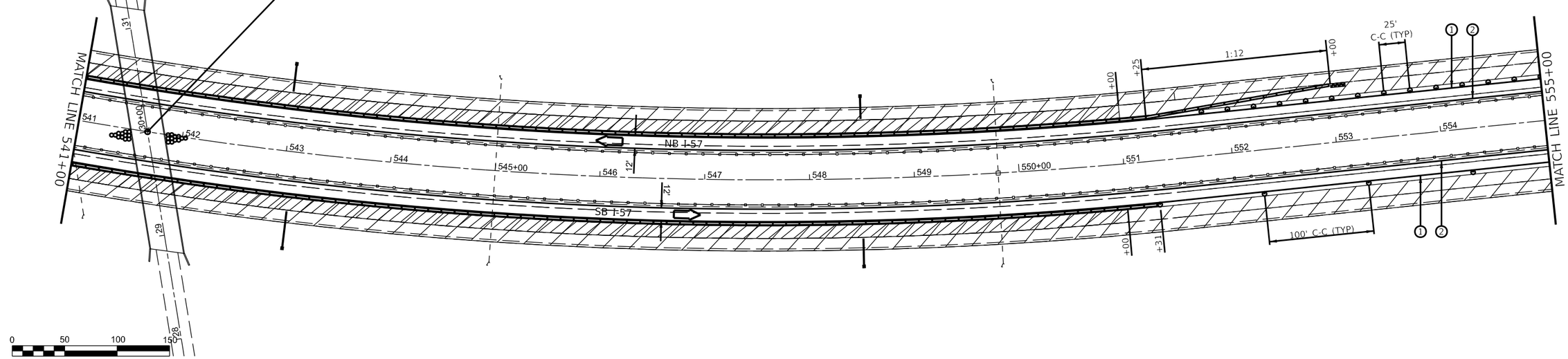


0 50 100 150
SCALE IN FEET

MODEL: STAGE 2 PLAN SHEETS
FILE NAME: pw://illinois.bentley.com:PWIDOT/Documents/IDOT Offices/District 3/ORD Projects/D398H62/CADData/CADsheets/66H62-Plan-Stage 2

| | | | |
|---|---|---|---|
| USER NAME = Joseph.Zagar | DESIGNED - | REVISED - | |
| | DRAWN - | REVISED - | |
| PLOT SCALE = 100.000 ' / in. | CHECKED - | REVISED - | |
| PLOT DATE = 12/15/2023 | DATE - | REVISED - | |

**STATE OF ILLINOIS**
**DEPARTMENT OF TRANSPORTATION**

**STAGE 2 TRAFFIC CONTROL**

SCALE: | SHEET 3 OF 17 SHEETS | STA. | TO STA.

| F.A.I RTE. | SECTION | COUNTY | TOTAL SHEETS | SHEET NO. |
|---|---|---|---|---|
| 57 | (38-6,38-5)RS,BRR,CLV | IROQUOIS | 213 | 141 |
| | | CONTRACT NO. 66H62 | | |
| | ILLINOIS | FED. AID PROJECT | | |

Long Section Number

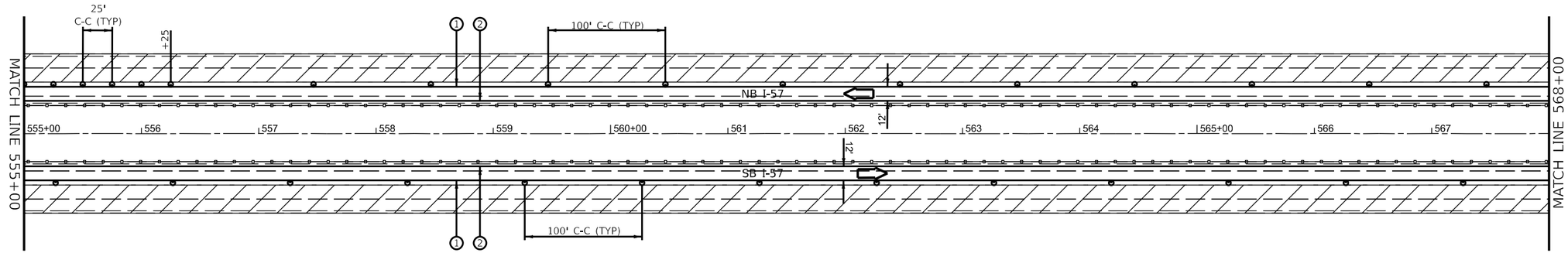


0 50 100 150
SCALE IN FEET

## LEGEND

- DIRECTION INDICATOR BARRICADE WITH STEADY BURN MONODIRECTIONAL LIGHT
- DRUMS WITH MONO-DIRECTIONAL STEADY BURNING LIGHTS
- DIRECTION OF TRAFFIC
- IMPACT ATTENUATOR, TEMPORARY (NON-REDIRECTIVE TL 3)
- TEMPORARY CONCRETE BARRIER
- ARROW BOARD
- CLASS A PATCHING UNDER STRUCTURES
- WORK ZONE
- (A) EXISTING PAVEMENT MARKING
- (1) TEMPORARY PAVEMENT MARKING MODIFIED URETHANE - WHITE
- (2) TEMPORARY PAVEMENT MARKING MODIFIED URETHANE - YELLOW
- (3) TEMPORARY PAVEMENT MARKING TYPE III TAPE - WHITE
- (4) TEMPORARY PAVEMENT MARKING TYPE III TAPE - YELLOW
- (5) SHORT TERM PAVEMENT MARKING

NOTES:
ALTERATIONS TO THE TRAFFIC CONTROL PLAN SHALL BE APPROVED BY THE ENGINEER.
USE TRAFFIC CONTROL STANDARDS 701400, 701401/701402 & 701406 FOR STAGE 2 WORKZONE. USE 701411 & 701456 FOR ALL RAMPS.
(NOT ALL TRAFFIC CONTROL DEVICES & SIGNING SHOWN) ADJUST RAMP OPENINGS IF REQUIRED.

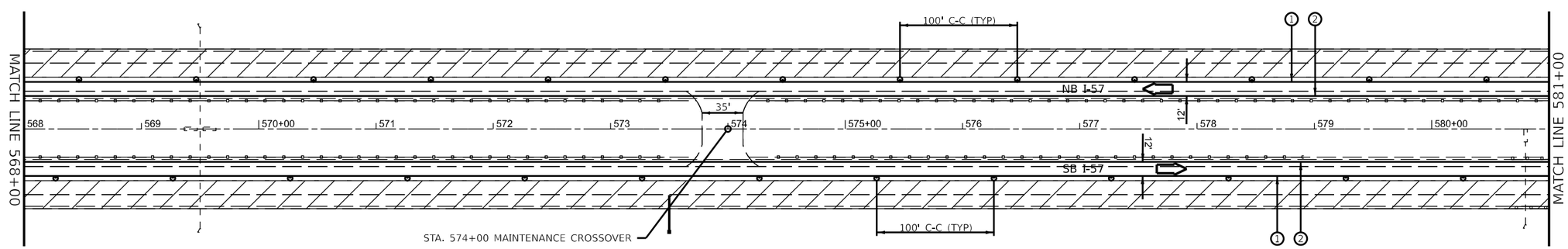


0 50 100 150
SCALE IN FEET

MODEL: STAGE 2 PLAN SHEETS
FILE NAME: pw://bldpw.bentley.com:PWIDOT/Documents/IDOT Offices/District 3/ORD Projects/D398482/CADData/CADsheets/66H62-Plan-Stage 2

| | | | |
|---|---|---|---|
| USER NAME = Joseph.Zagar | DESIGNED - | REVISED - | |
| | DRAWN - | REVISED - | |
| PLOT SCALE = 100,000 ' / in. | CHECKED - | REVISED - | |
| PLOT DATE = 12/15/2023 | DATE - | REVISED - | |

**STATE OF ILLINOIS**
**DEPARTMENT OF TRANSPORTATION**

**STAGE 2 TRAFFIC CONTROL**

SCALE: SHEET 4 OF 17 SHEETS STA. TO STA.

| F.A.I RTE. | SECTION | COUNTY | TOTAL SHEETS | SHEET NO. |
|---|---|---|---|---|
| 57 | (38-6,38-5)RS,BRR,CLV | IROQUOIS | 213 | 142 |
| | | CONTRACT NO. 66H62 | | |
| | ILLINOIS | FED. AID PROJECT | | |

Long Section Number

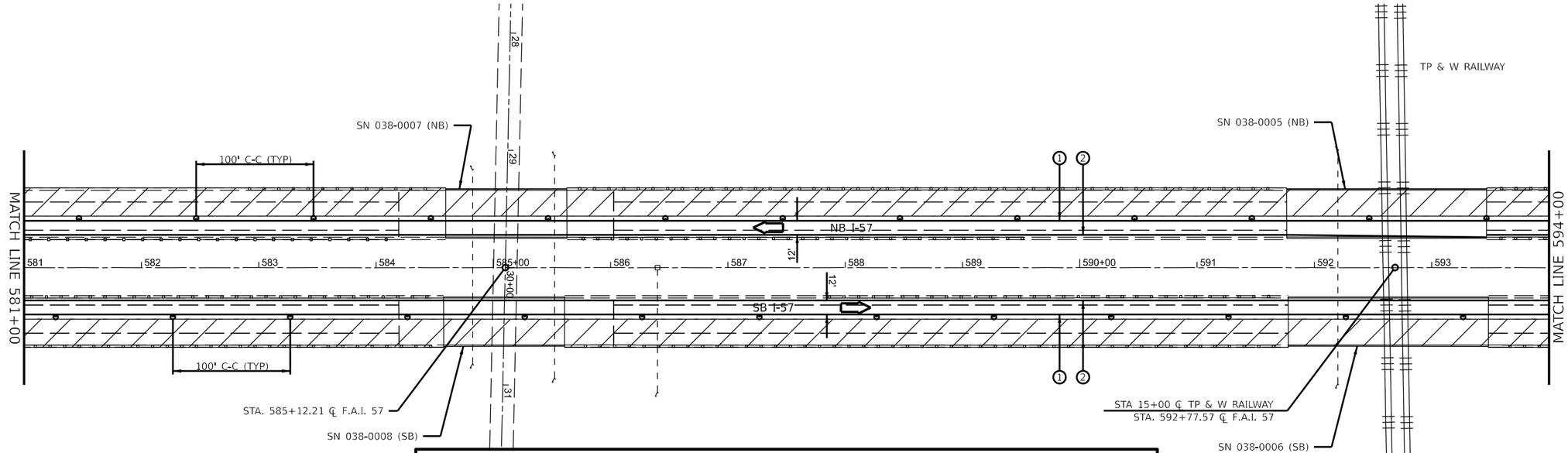


0 50 100 150
SCALE IN FEET

## LEGEND

- DIRECTION INDICATOR BARRICADE WITH STEADY BURN MONODIRECTIONAL LIGHT
- DRUMS WITH MONO-DIRECTIONAL STEADY BURNING LIGHTS
- DIRECTION OF TRAFFIC
- IMPACT ATTENUATOR, TEMPORARY (NON-REDIRECTIVE TL 3)
- TEMPORARY CONCRETE BARRIER
- ARROW BOARD
- CLASS A PATCHING UNDER STRUCTURES
- WORK ZONE
- (A) EXISTING PAVEMENT MARKING
- (1) TEMPORARY PAVEMENT MARKING MODIFIED URETHANE - WHITE
- (2) TEMPORARY PAVEMENT MARKING MODIFIED URETHANE - YELLOW
- (3) TEMPORARY PAVEMENT MARKING TYPE III TAPE - WHITE
- (4) TEMPORARY PAVEMENT MARKING TYPE III TAPE - YELLOW
- (5) SHORT TERM PAVEMENT MARKING

NOTES:
ALTERATIONS TO THE TRAFFIC CONTROL PLAN SHALL BE APPROVED BY THE ENGINEER.
USE TRAFFIC CONTROL STANDARDS 701400, 701401/701402 & 701406 FOR STAGE 2 WORKZONE. USE 701411 & 701456 FOR ALL RAMPS.
(NOT ALL TRAFFIC CONTROL DEVICES & SIGNING SHOWN) ADJUST RAMP OPENINGS IF REQUIRED.

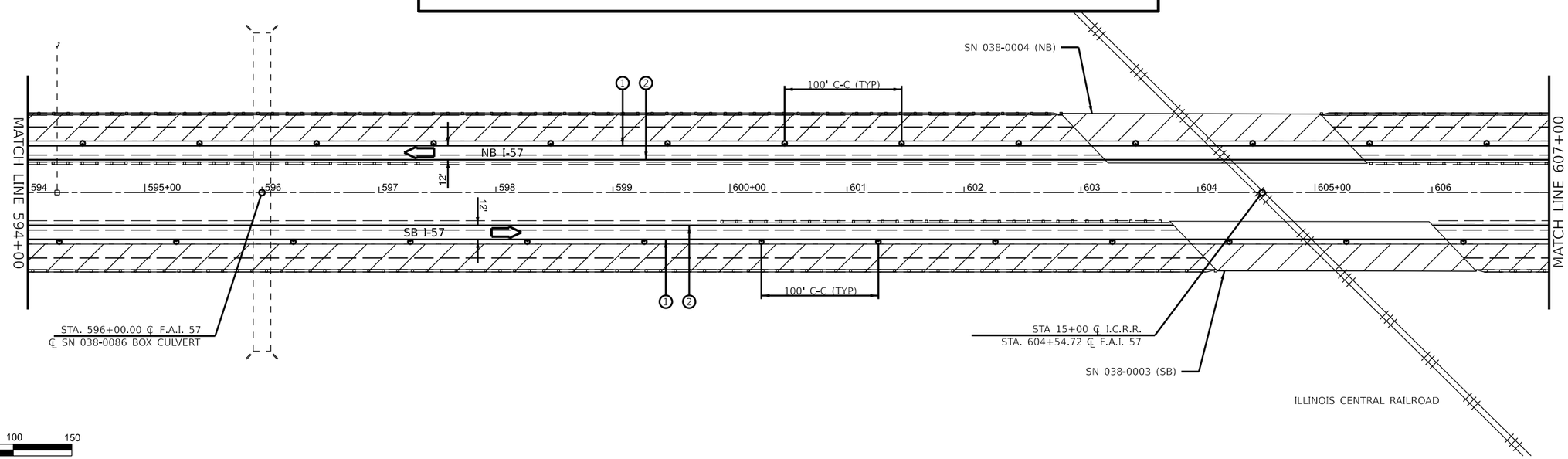


0 50 100 150
SCALE IN FEET

MODEL: STAGE 2 PLAN SHEETS
FILE NAME: pw://bldpw.bentley.com:PWIDOT/Documents/IDOT Offices/District 3/ORD Projects/D398H62/CADData/CADsheets/66H62-Plan-Stage 2

| | | | |
|---|---|---|---|
| USER NAME = Joseph.Zagar | DESIGNED - | REVISED - | |
| | DRAWN - | REVISED - | |
| PLOT SCALE = 100,000 ' / in. | CHECKED - | REVISED - | |
| PLOT DATE = 12/15/2023 | DATE - | REVISED - | |

**STATE OF ILLINOIS**
**DEPARTMENT OF TRANSPORTATION**

**STAGE 2 TRAFFIC CONTROL**

SCALE: | SHEET 5 OF 17 SHEETS | STA. | TO STA.

| F.A.I RTE. | SECTION | COUNTY | TOTAL SHEETS | SHEET NO. |
|---|---|---|---|---|
| 57 | (38-6,38-5)RS,BRR,CLV | IROQUOIS | 213 | 143 |
| | | CONTRACT NO. 66H62 | | |
| | ILLINOIS | FED. AID PROJECT | | |

Long Section Number

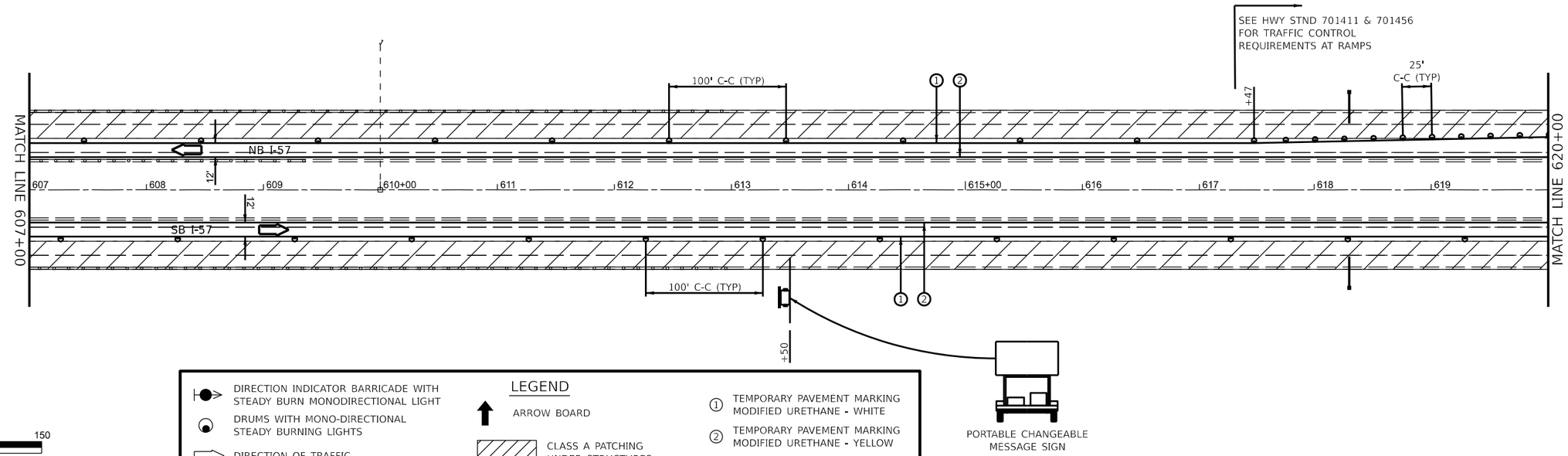


0 50 100 150
SCALE IN FEET

## LEGEND

- DIRECTION INDICATOR BARRICADE WITH STEADY BURN MONODIRECTIONAL LIGHT
- DRUMS WITH MONO-DIRECTIONAL STEADY BURNING LIGHTS
- DIRECTION OF TRAFFIC
- IMPACT ATTENUATOR, TEMPORARY (NON-REDIRECTIVE TL 3)
- TEMPORARY CONCRETE BARRIER
- ARROW BOARD
- CLASS A PATCHING UNDER STRUCTURES
- WORK ZONE
- (A) EXISTING PAVEMENT MARKING
- (1) TEMPORARY PAVEMENT MARKING MODIFIED URETHANE - WHITE
- (2) TEMPORARY PAVEMENT MARKING MODIFIED URETHANE - YELLOW
- (3) TEMPORARY PAVEMENT MARKING TYPE III TAPE - WHITE
- (4) TEMPORARY PAVEMENT MARKING TYPE III TAPE - YELLOW
- (5) SHORT TERM PAVEMENT MARKING

NOTES:
ALTERATIONS TO THE TRAFFIC CONTROL PLAN SHALL BE APPROVED BY THE ENGINEER.
USE TRAFFIC CONTROL STANDARDS 701400, 701401/701402 & 701406 FOR STAGE 2 WORKZONE. USE 701411 & 701456 FOR ALL RAMPS.
(NOT ALL TRAFFIC CONTROL DEVICES & SIGNING SHOWN) ADJUST RAMP OPENINGS IF REQUIRED.

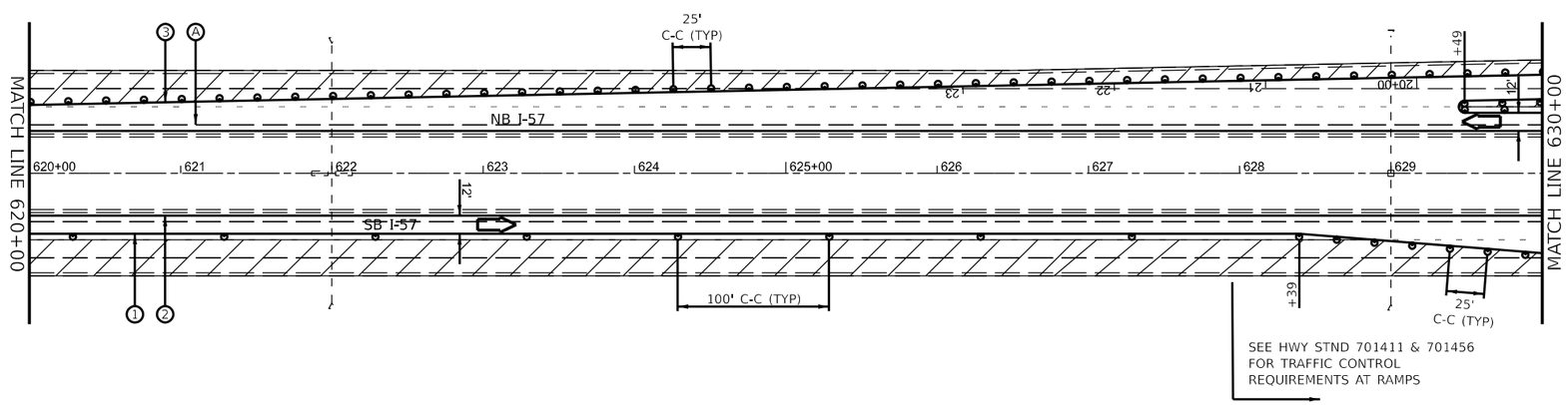


0 50 100 150
SCALE IN FEET

MODEL: STAGE 2 PLAN SHEETS
FILE NAME: pw://bldpw.bentley.com:PWIDOT/Documents/IDOT Offices/District 3/ORD Projects/D398H62/CADData/CADsheets/66H62-Plan-Stage 2

| | | | |
|---|---|---|---|
| USER NAME = Joseph.Zagar | DESIGNED - | REVISED - | |
| | DRAWN - | REVISED - | |
| PLOT SCALE = 100,000 ' / in. | CHECKED - | REVISED - | |
| PLOT DATE = 12/15/2023 | DATE - | REVISED - | |

**STATE OF ILLINOIS**
**DEPARTMENT OF TRANSPORTATION**

**STAGE 2 TRAFFIC CONTROL**

SCALE: | SHEET 6 OF 17 SHEETS | STA. | TO STA.

| F.A.I RTE. | SECTION | COUNTY | TOTAL SHEETS | SHEET NO. |
|---|---|---|---|---|
| 57 | (38-6,38-5)RS,BRR,CLV | IROQUOIS | 213 | 144 |
| | | CONTRACT NO. 66H62 | | |
| | | ILLINOIS | FED. AID PROJECT | |

Long Section Number

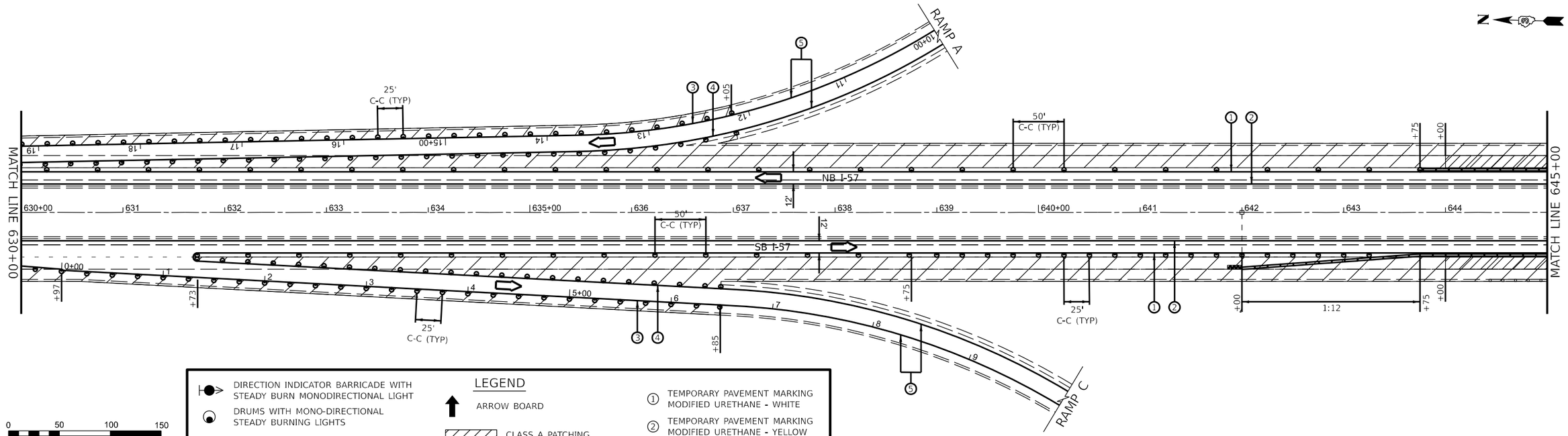


0 50 100 150
SCALE IN FEET

## LEGEND

- DIRECTION INDICATOR BARRICADE WITH STEADY BURN MONODIRECTIONAL LIGHT
- DRUMS WITH MONO-DIRECTIONAL STEADY BURNING LIGHTS
- DIRECTION OF TRAFFIC
- IMPACT ATTENUATOR, TEMPORARY (NON-REDIRECTIVE TL 3)
- TEMPORARY CONCRETE BARRIER
- ARROW BOARD
- CLASS A PATCHING UNDER STRUCTURES
- WORK ZONE
- (A) EXISTING PAVEMENT MARKING
- (1) TEMPORARY PAVEMENT MARKING MODIFIED URETHANE - WHITE
- (2) TEMPORARY PAVEMENT MARKING MODIFIED URETHANE - YELLOW
- (3) TEMPORARY PAVEMENT MARKING TYPE III TAPE - WHITE
- (4) TEMPORARY PAVEMENT MARKING TYPE III TAPE - YELLOW
- (5) SHORT TERM PAVEMENT MARKING

NOTES:
ALTERATIONS TO THE TRAFFIC CONTROL PLAN SHALL BE APPROVED BY THE ENGINEER.
USE TRAFFIC CONTROL STANDARDS 701400, 701401/701402 & 701406 FOR STAGE 2 WORKZONE. USE 701411 & 701456 FOR ALL RAMPS.
(NOT ALL TRAFFIC CONTROL DEVICES & SIGNING SHOWN) ADJUST RAMP OPENINGS IF REQUIRED.

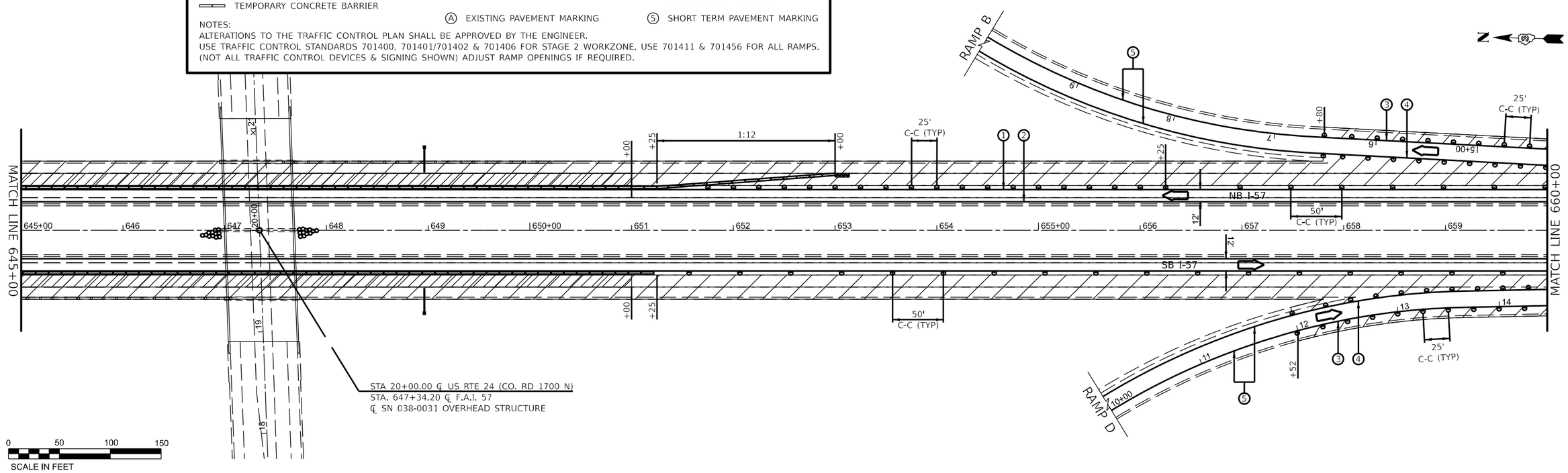


0 50 100 150
SCALE IN FEET

MODEL: STAGE 2 PLAN SHEETS
FILE NAME: pw://bldxpw.bentley.com:PWIDOT/Documents/IDOT Offices/District 3/ORD Projects/D398H62/CADData/CADsheets/66H62-Plan-Stage 2

| | | | |
|---|---|---|---|
| USER NAME = Joseph.Zagar | DESIGNED - | REVISED - | |
| | DRAWN - | REVISED - | |
| PLOT SCALE = 100,000 ' / in. | CHECKED - | REVISED - | |
| PLOT DATE = 12/15/2023 | DATE - | REVISED - | |

**STATE OF ILLINOIS**
**DEPARTMENT OF TRANSPORTATION**

**STAGE 2 TRAFFIC CONTROL**

SCALE: | SHEET 7 OF 17 SHEETS | STA. | TO STA.

| F.A.I RTE. | SECTION | COUNTY | TOTAL SHEETS | SHEET NO. |
|---|---|---|---|---|
| 57 | (38-6,38-5)RS,BRR,CLV | IROQUOIS | 213 | 145 |
| | | CONTRACT NO. 66H62 | | |
| | | ILLINOIS | FED. AID PROJECT | |

Long Section Number

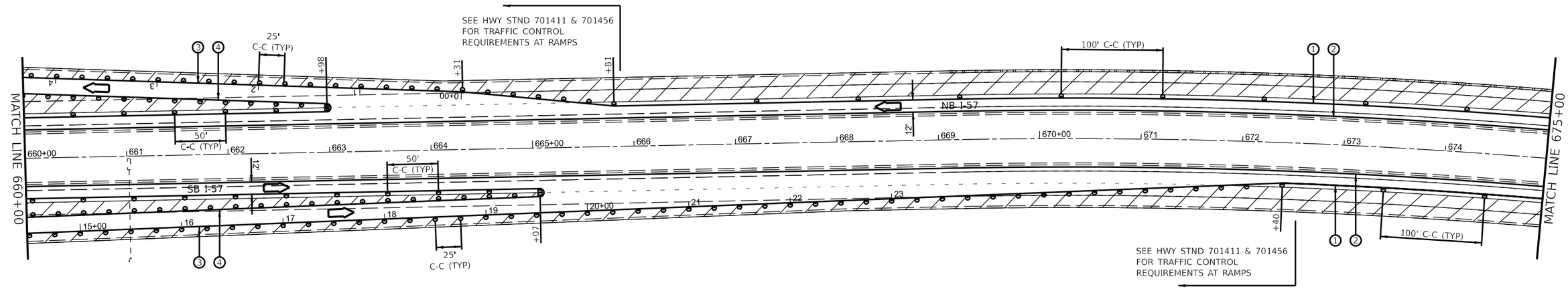


0 50 100 150
SCALE IN FEET

## LEGEND

- DIRECTION INDICATOR BARRICADE WITH STEADY BURN MONODIRECTIONAL LIGHT
- DRUMS WITH MONO-DIRECTIONAL STEADY BURNING LIGHTS
- DIRECTION OF TRAFFIC
- IMPACT ATTENUATOR, TEMPORARY (NON-REDIRECTIVE TL 3)
- TEMPORARY CONCRETE BARRIER
- ARROW BOARD
- CLASS A PATCHING UNDER STRUCTURES
- WORK ZONE
- (A) EXISTING PAVEMENT MARKING
- (1) TEMPORARY PAVEMENT MARKING MODIFIED URETHANE - WHITE
- (2) TEMPORARY PAVEMENT MARKING MODIFIED URETHANE - YELLOW
- (3) TEMPORARY PAVEMENT MARKING TYPE III TAPE - WHITE
- (4) TEMPORARY PAVEMENT MARKING TYPE III TAPE - YELLOW
- (5) SHORT TERM PAVEMENT MARKING

NOTES:
ALTERATIONS TO THE TRAFFIC CONTROL PLAN SHALL BE APPROVED BY THE ENGINEER.
USE TRAFFIC CONTROL STANDARDS 701400, 701401/701402 & 701406 FOR STAGE 2 WORKZONE. USE 701411 & 701456 FOR ALL RAMPS.
(NOT ALL TRAFFIC CONTROL DEVICES & SIGNING SHOWN) ADJUST RAMP OPENINGS IF REQUIRED.

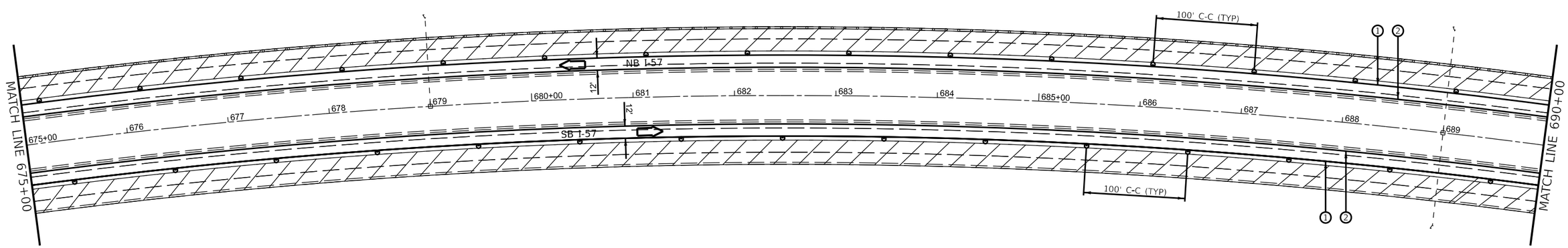


0 50 100 150
SCALE IN FEET

MODEL: STAGE 2 PLAN SHEETS
FILE NAME: pw://bldpw.bentley.com:PWIDOT/Documents/IDOT Offices/District 3/ORD Projects/D398482/CADData/CADsheets/698482-Plan-Stage 2

| | | | |
|---|---|---|---|
| USER NAME = Joseph.Zagar | DESIGNED - | REVISED - | |
| | DRAWN - | REVISED - | |
| PLOT SCALE = 100,000 ' / in. | CHECKED - | REVISED - | |
| PLOT DATE = 12/15/2023 | DATE - | REVISED - | |

**STATE OF ILLINOIS**
**DEPARTMENT OF TRANSPORTATION**

**STAGE 2 TRAFFIC CONTROL**

SCALE: | SHEET 8 OF 17 SHEETS | STA. | TO STA.

| F.A.I RTE. | SECTION | COUNTY | TOTAL SHEETS | SHEET NO. |
|---|---|---|---|---|
| 57 | (38-6,38-5)RS,BRR,CLV | IROQUOIS | 213 | 146 |

CONTRACT NO. 66H62

ILLINOIS | FED. AID PROJECT

Long Section Number

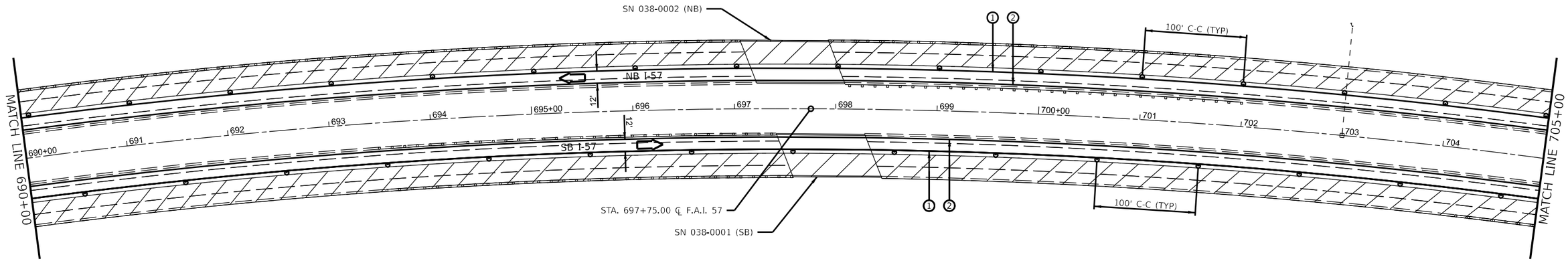


0 50 100 150
SCALE IN FEET

## LEGEND

- DIRECTION INDICATOR BARRICADE WITH STEADY BURN MONODIRECTIONAL LIGHT
- DRUMS WITH MONO-DIRECTIONAL STEADY BURNING LIGHTS
- DIRECTION OF TRAFFIC
- IMPACT ATTENUATOR, TEMPORARY (NON-REDIRECTIVE TL 3)
- TEMPORARY CONCRETE BARRIER
- ARROW BOARD
- CLASS A PATCHING UNDER STRUCTURES
- WORK ZONE
- (A) EXISTING PAVEMENT MARKING
- (1) TEMPORARY PAVEMENT MARKING MODIFIED URETHANE - WHITE
- (2) TEMPORARY PAVEMENT MARKING MODIFIED URETHANE - YELLOW
- (3) TEMPORARY PAVEMENT MARKING TYPE III TAPE - WHITE
- (4) TEMPORARY PAVEMENT MARKING TYPE III TAPE - YELLOW
- (5) SHORT TERM PAVEMENT MARKING

NOTES:
ALTERATIONS TO THE TRAFFIC CONTROL PLAN SHALL BE APPROVED BY THE ENGINEER.
USE TRAFFIC CONTROL STANDARDS 701400, 701401/701402 & 701406 FOR STAGE 2 WORKZONE. USE 701411 & 701456 FOR ALL RAMPS.
(NOT ALL TRAFFIC CONTROL DEVICES & SIGNING SHOWN) ADJUST RAMP OPENINGS IF REQUIRED.

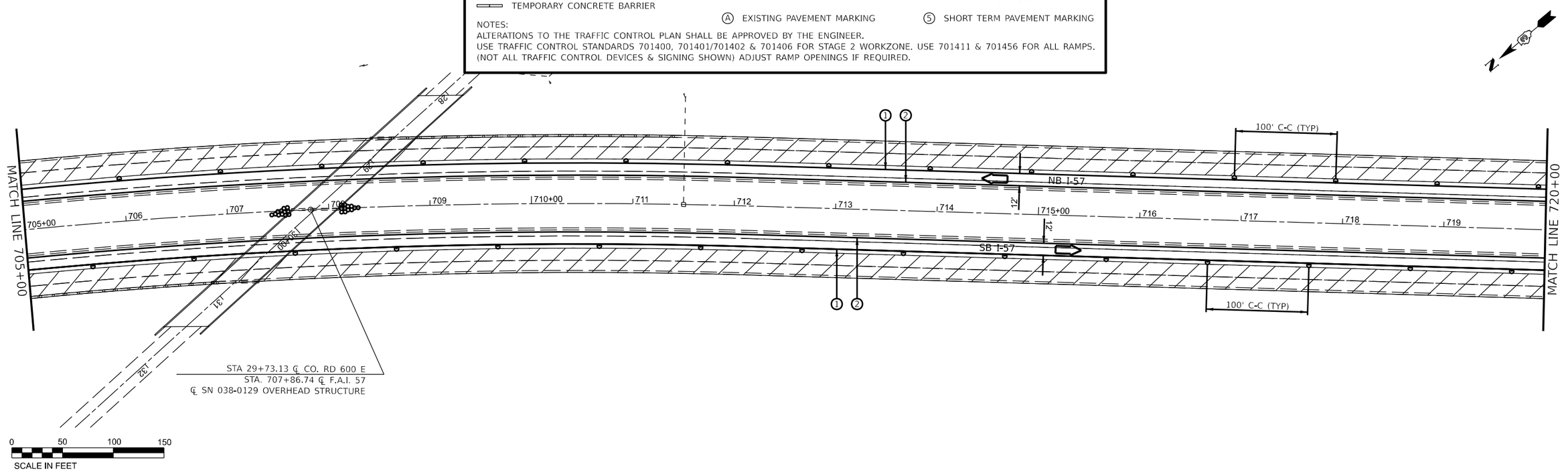


0 50 100 150
SCALE IN FEET

MODEL: STAGE 2 PLAN SHEETS
FILE NAME: pw://bldxpw.bentley.com:PWIDOT/Documents/IDOT Offices/District 3/ORD Projects/D398H62/CADData/CADsheets/66H62-Plan-Stage 2

| | | | |
|---|---|---|---|
| USER NAME = Joseph.Zagar | DESIGNED - | REVISED - | |
| | DRAWN - | REVISED - | |
| PLOT SCALE = 100,000 ' / in. | CHECKED - | REVISED - | |
| PLOT DATE = 12/15/2023 | DATE - | REVISED - | |

**STATE OF ILLINOIS**
**DEPARTMENT OF TRANSPORTATION**

**STAGE 2 TRAFFIC CONTROL**

SCALE: SHEET 9 OF 17 SHEETS STA. TO STA.

| F.A.I RTE. | SECTION | COUNTY | TOTAL SHEETS | SHEET NO. |
|---|---|---|---|---|
| 57 | (38-6,38-5)RS,BRR,CLV | IROQUOIS | 213 | 147 |
| | | CONTRACT NO. 66H62 | | |
| | ILLINOIS | FED. AID PROJECT | | |

Long Section Number

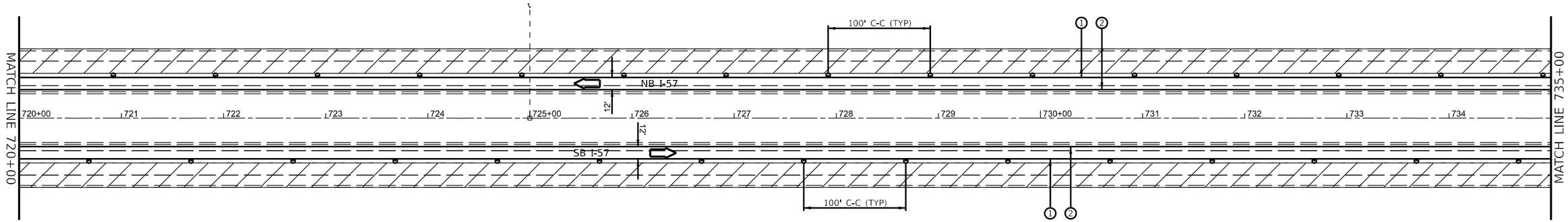


0 50 100 150
SCALE IN FEET

## LEGEND

- DIRECTION INDICATOR BARRICADE WITH STEADY BURN MONODIRECTIONAL LIGHT
- DRUMS WITH MONO-DIRECTIONAL STEADY BURNING LIGHTS
- DIRECTION OF TRAFFIC
- IMPACT ATTENUATOR, TEMPORARY (NON-REDIRECTIVE TL 3)
- TEMPORARY CONCRETE BARRIER
- ARROW BOARD
- CLASS A PATCHING UNDER STRUCTURES
- WORK ZONE
- (A) EXISTING PAVEMENT MARKING
- (1) TEMPORARY PAVEMENT MARKING MODIFIED URETHANE - WHITE
- (2) TEMPORARY PAVEMENT MARKING MODIFIED URETHANE - YELLOW
- (3) TEMPORARY PAVEMENT MARKING TYPE III TAPE - WHITE
- (4) TEMPORARY PAVEMENT MARKING TYPE III TAPE - YELLOW
- (5) SHORT TERM PAVEMENT MARKING

NOTES:
ALTERATIONS TO THE TRAFFIC CONTROL PLAN SHALL BE APPROVED BY THE ENGINEER.
USE TRAFFIC CONTROL STANDARDS 701400, 701401/701402 & 701406 FOR STAGE 2 WORKZONE. USE 701411 & 701456 FOR ALL RAMPS.
(NOT ALL TRAFFIC CONTROL DEVICES & SIGNING SHOWN) ADJUST RAMP OPENINGS IF REQUIRED.

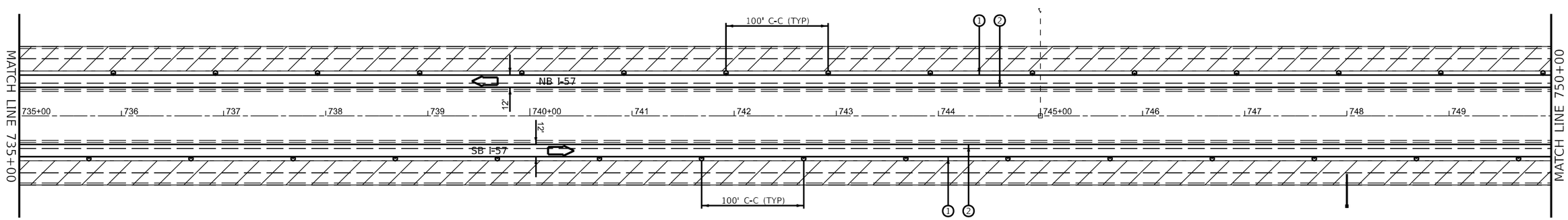


0 50 100 150
SCALE IN FEET

MODEL: STAGE 2 PLAN SHEETS
FILE NAME: pw://bldpw.bentley.com:PWIDOT/Documents/IDOT Offices/District 3/ORD Projects/D398482/CADData/CADsheets/66H62-Plan-Stage 2

| | | | |
|---|---|---|---|
| USER NAME = Joseph.Zagar | DESIGNED - | REVISED - | |
| | DRAWN - | REVISED - | |
| PLOT SCALE = 100,000 ' / in. | CHECKED - | REVISED - | |
| PLOT DATE = 12/15/2023 | DATE - | REVISED - | |

**STATE OF ILLINOIS**
**DEPARTMENT OF TRANSPORTATION**

**STAGE 2 TRAFFIC CONTROL**

SCALE: | SHEET 10 OF 17 SHEETS | STA. | TO STA.

| F.A.I RTE. | SECTION | COUNTY | TOTAL SHEETS | SHEET NO. |
|---|---|---|---|---|
| 57 | (38-6,38-5)RS,BRR,CLV | IROQUOIS | 213 | 148 |
| | | CONTRACT NO. 66H62 | | |
| | | ILLINOIS | FED. AID PROJECT | |

Long Section Number

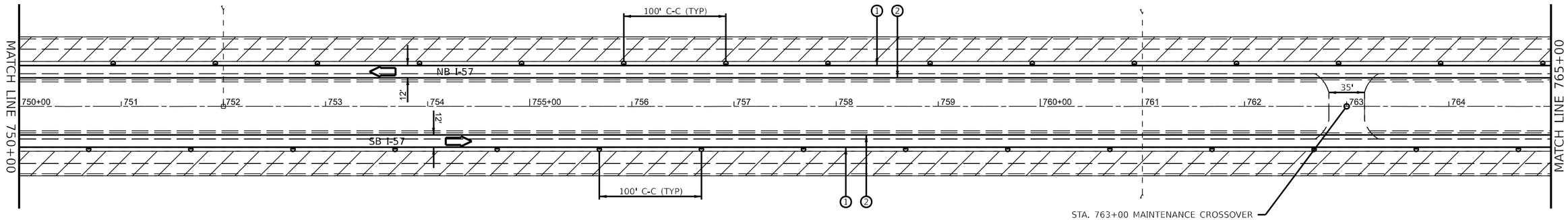


0 50 100 150
SCALE IN FEET

## LEGEND

- DIRECTION INDICATOR BARRICADE WITH STEADY BURN MONODIRECTIONAL LIGHT
- DRUMS WITH MONO-DIRECTIONAL STEADY BURNING LIGHTS
- DIRECTION OF TRAFFIC
- IMPACT ATTENUATOR, TEMPORARY (NON-REDIRECTIVE TL 3)
- TEMPORARY CONCRETE BARRIER
- ARROW BOARD
- CLASS A PATCHING UNDER STRUCTURES
- WORK ZONE
- (A) EXISTING PAVEMENT MARKING
- (1) TEMPORARY PAVEMENT MARKING MODIFIED URETHANE - WHITE
- (2) TEMPORARY PAVEMENT MARKING MODIFIED URETHANE - YELLOW
- (3) TEMPORARY PAVEMENT MARKING TYPE III TAPE - WHITE
- (4) TEMPORARY PAVEMENT MARKING TYPE III TAPE - YELLOW
- (5) SHORT TERM PAVEMENT MARKING

NOTES:
ALTERATIONS TO THE TRAFFIC CONTROL PLAN SHALL BE APPROVED BY THE ENGINEER.
USE TRAFFIC CONTROL STANDARDS 701400, 701401/701402 & 701406 FOR STAGE 2 WORKZONE. USE 701411 & 701456 FOR ALL RAMPS.
(NOT ALL TRAFFIC CONTROL DEVICES & SIGNING SHOWN) ADJUST RAMP OPENINGS IF REQUIRED.

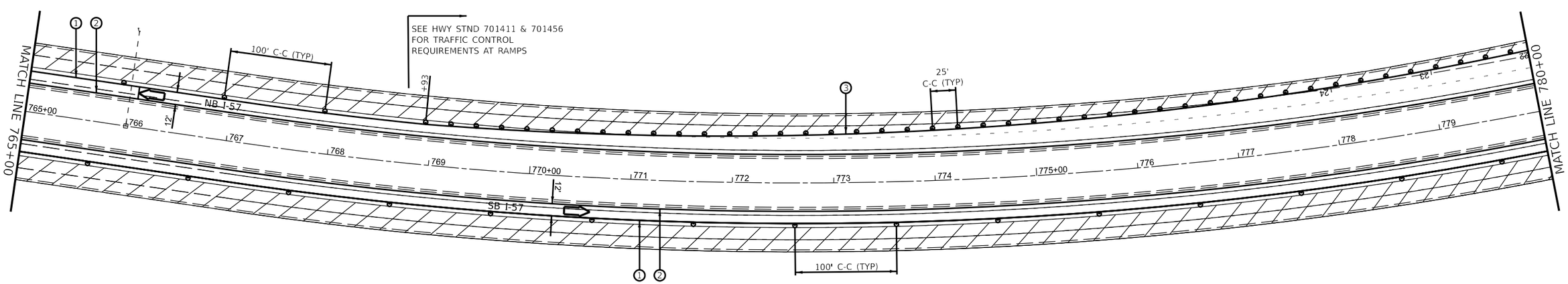


0 50 100 150
SCALE IN FEET

MODEL: STAGE 2 PLAN SHEETS
FILE NAME: pw://bldxpw.bentley.com:PWIDOT/Documents/IDOT Offices/District 3/ORD Projects/D398482/CADData/CADsheets/66H62-Plan-Stage 2

| | | | |
|---|---|---|---|
| USER NAME = Joseph.Zagar | DESIGNED - | REVISED - | |
| | DRAWN - | REVISED - | |
| PLOT SCALE = 100,000 ' / in. | CHECKED - | REVISED - | |
| PLOT DATE = 12/15/2023 | DATE - | REVISED - | |

**STATE OF ILLINOIS**
**DEPARTMENT OF TRANSPORTATION**

**STAGE 2 TRAFFIC CONTROL**

SCALE: SHEET 11 OF 17 SHEETS STA. TO STA.

| F.A.I RTE. | SECTION | COUNTY | TOTAL SHEETS | SHEET NO. |
|---|---|---|---|---|
| 57 | (38-6,38-5)RS,BRR,CLV | IROQUOIS | 213 | 149 |
| | | CONTRACT NO. 66H62 | | |
| | ILLINOIS | FED. AID PROJECT | | |

Long Section Number

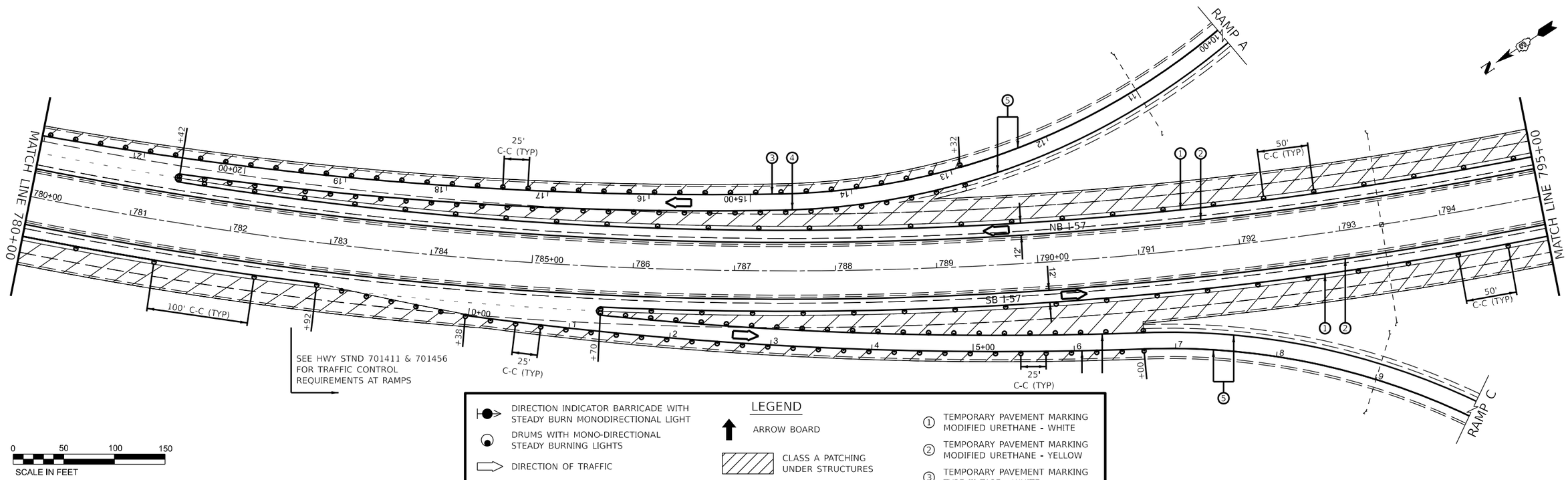


## LEGEND

- DIRECTION INDICATOR BARRICADE WITH STEADY BURN MONODIRECTIONAL LIGHT
- DRUMS WITH MONO-DIRECTIONAL STEADY BURNING LIGHTS
- DIRECTION OF TRAFFIC
- IMPACT ATTENUATOR, TEMPORARY (NON-REDIRECTIVE TL 3)
- TEMPORARY CONCRETE BARRIER
- ARROW BOARD
- CLASS A PATCHING UNDER STRUCTURES
- WORK ZONE
- (A) EXISTING PAVEMENT MARKING
- (1) TEMPORARY PAVEMENT MARKING MODIFIED URETHANE - WHITE
- (2) TEMPORARY PAVEMENT MARKING MODIFIED URETHANE - YELLOW
- (3) TEMPORARY PAVEMENT MARKING TYPE III TAPE - WHITE
- (4) TEMPORARY PAVEMENT MARKING TYPE III TAPE - YELLOW
- (5) SHORT TERM PAVEMENT MARKING

NOTES:
ALTERATIONS TO THE TRAFFIC CONTROL PLAN SHALL BE APPROVED BY THE ENGINEER.
USE TRAFFIC CONTROL STANDARDS 701400, 701401/701402 & 701406 FOR STAGE 2 WORKZONE. USE 701411 & 701456 FOR ALL RAMPS.
(NOT ALL TRAFFIC CONTROL DEVICES & SIGNING SHOWN) ADJUST RAMP OPENINGS IF REQUIRED.

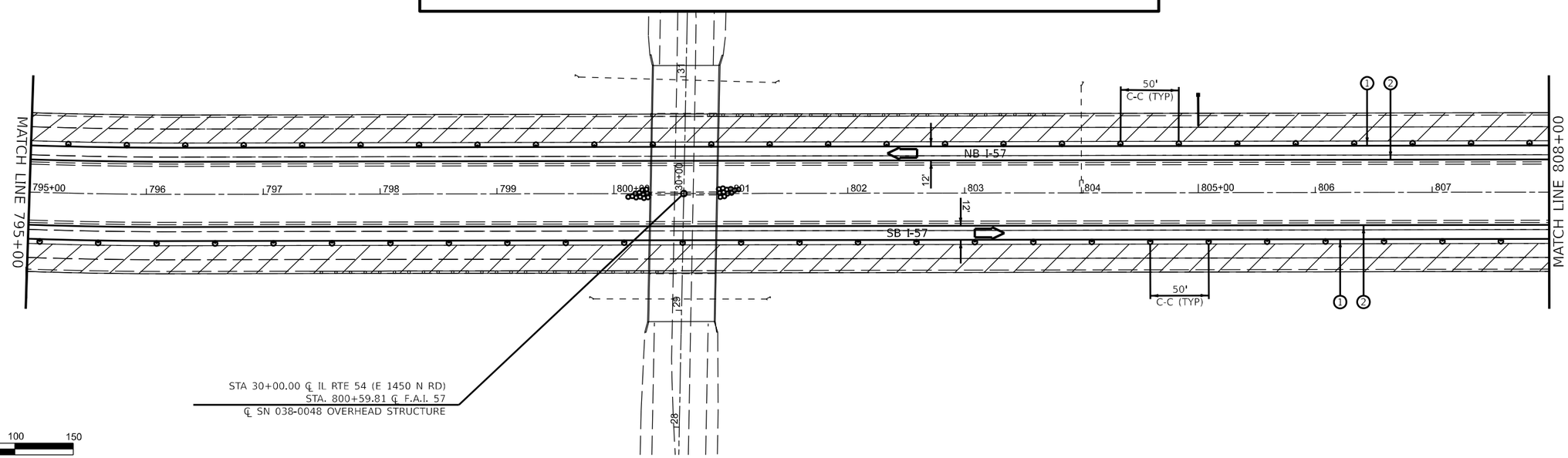


MODEL: STAGE 2 PLAN SHEETS
FILE NAME: pw://bldpw.bentley.com:PWIDOT/Documents/IDOT Offices/District 3/ORD Projects/D398H62/CADData/CADsheets/66H62-Plan-Stage 2

| | | | |
|---|---|---|---|
| USER NAME = Joseph.Zagar | DESIGNED - | REVISED - | STATE OF ILLINOIS DEPARTMENT OF TRANSPORTATION |
| | DRAWN - | REVISED - | |
| PLOT SCALE = 100,000 ' / in. | CHECKED - | REVISED - | |
| PLOT DATE = 12/15/2023 | DATE - | REVISED - | |

**STAGE 2 TRAFFIC CONTROL**

SCALE: | SHEET 12 OF 17 SHEETS | STA. | TO STA.

| F.A.I RTE. | SECTION | COUNTY | TOTAL SHEETS | SHEET NO. |
|---|---|---|---|---|
| 57 | (38-6,38-5)RS,BRR,CLV | IROQUOIS | 213 | 150 |
| | | CONTRACT NO. 66H62 | | |
| | ILLINOIS | FED. AID PROJECT | | |

Long Section Number

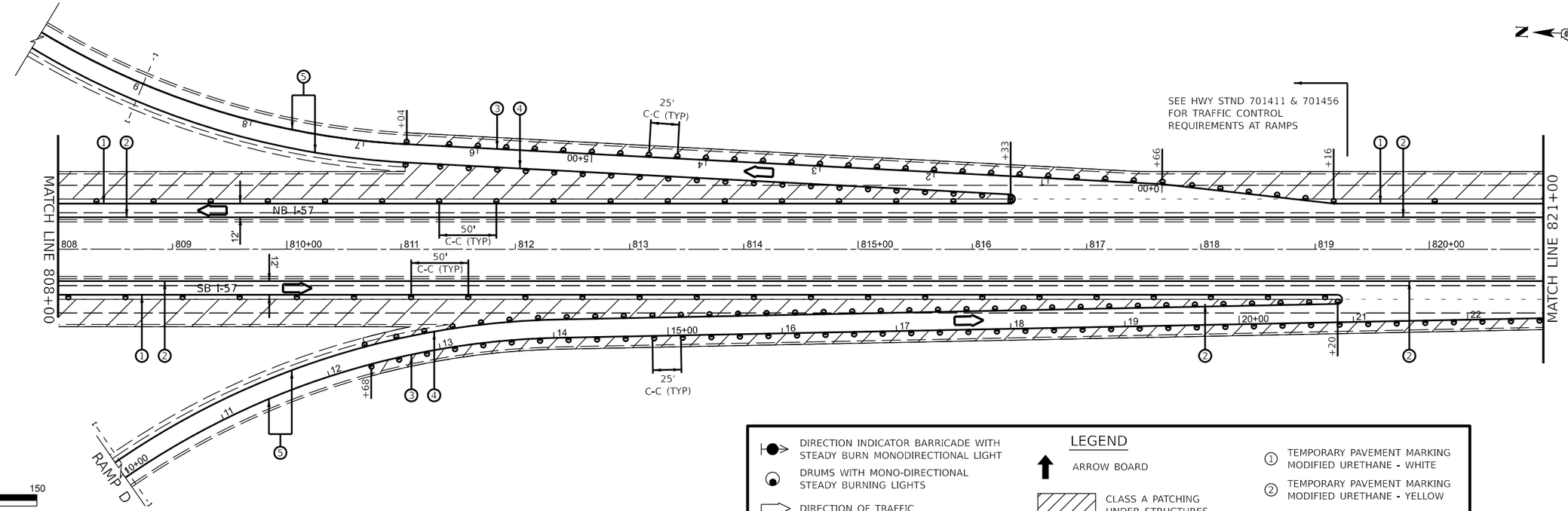


## LEGEND

- DIRECTION INDICATOR BARRICADE WITH STEADY BURN MONODIRECTIONAL LIGHT
- DRUMS WITH MONO-DIRECTIONAL STEADY BURNING LIGHTS
- DIRECTION OF TRAFFIC
- IMPACT ATTENUATOR, TEMPORARY (NON-REDIRECTIVE TL 3)
- TEMPORARY CONCRETE BARRIER
- ARROW BOARD
- CLASS A PATCHING UNDER STRUCTURES
- WORK ZONE
- (A) EXISTING PAVEMENT MARKING
- (1) TEMPORARY PAVEMENT MARKING MODIFIED URETHANE - WHITE
- (2) TEMPORARY PAVEMENT MARKING MODIFIED URETHANE - YELLOW
- (3) TEMPORARY PAVEMENT MARKING TYPE III TAPE - WHITE
- (4) TEMPORARY PAVEMENT MARKING TYPE III TAPE - YELLOW
- (5) SHORT TERM PAVEMENT MARKING

NOTES:
ALTERATIONS TO THE TRAFFIC CONTROL PLAN SHALL BE APPROVED BY THE ENGINEER.
USE TRAFFIC CONTROL STANDARDS 701400, 701401/701402 & 701406 FOR STAGE 2 WORKZONE. USE 701411 & 701456 FOR ALL RAMPS.
(NOT ALL TRAFFIC CONTROL DEVICES & SIGNING SHOWN) ADJUST RAMP OPENINGS IF REQUIRED.

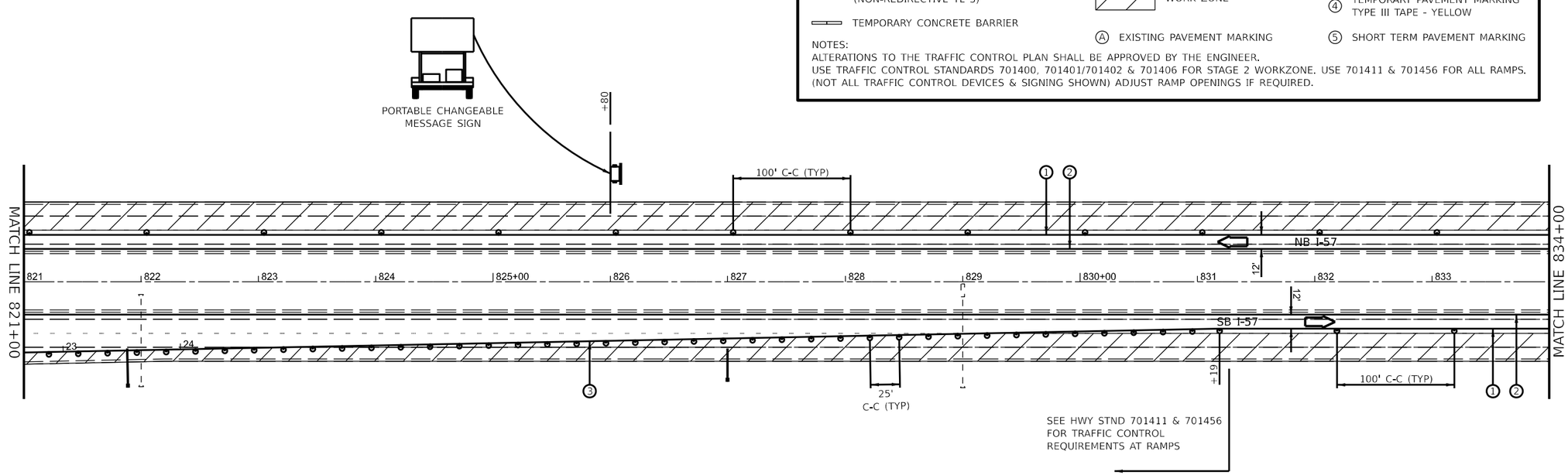


MODEL: STAGE 2 PLAN SHEETS
FILE NAME: pw://illinois.bentley.com:PWIDOT/Documents/IDOT Offices/District 3/ORD Projects/D398H02/CADData/CADsheets/66H62-Plan-Stage 2

| | | | |
|---|---|---|---|
| USER NAME = Joseph.Zagar | DESIGNED - | REVISED - | |
| | DRAWN - | REVISED - | |
| PLOT SCALE = 100.000 ' / in. | CHECKED - | REVISED - | |
| PLOT DATE = 12/15/2023 | DATE - | REVISED - | |

**STATE OF ILLINOIS**
**DEPARTMENT OF TRANSPORTATION**

**STAGE 2 TRAFFIC CONTROL**

SCALE: | SHEET 13 OF 17 SHEETS | STA. | TO STA.

| F.A.I RTE. | SECTION | COUNTY | TOTAL SHEETS | SHEET NO. |
|---|---|---|---|---|
| 57 | (38-6,38-5)RS,BRR,CLV | IROQUOIS | 213 | 151 |
| | | CONTRACT NO. 66H62 | | |
| | ILLINOIS | FED. AID PROJECT | | |

Long Section Number

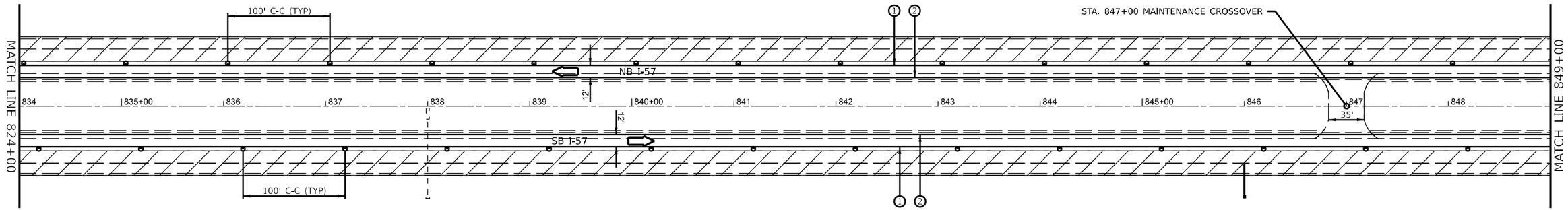


0 50 100 150
SCALE IN FEET

## LEGEND

- DIRECTION INDICATOR BARRICADE WITH STEADY BURN MONODIRECTIONAL LIGHT
- DRUMS WITH MONO-DIRECTIONAL STEADY BURNING LIGHTS
- DIRECTION OF TRAFFIC
- IMPACT ATTENUATOR, TEMPORARY (NON-REDIRECTIVE TL 3)
- TEMPORARY CONCRETE BARRIER
- ARROW BOARD
- CLASS A PATCHING UNDER STRUCTURES
- WORK ZONE
- (A) EXISTING PAVEMENT MARKING
- (1) TEMPORARY PAVEMENT MARKING MODIFIED URETHANE - WHITE
- (2) TEMPORARY PAVEMENT MARKING MODIFIED URETHANE - YELLOW
- (3) TEMPORARY PAVEMENT MARKING TYPE III TAPE - WHITE
- (4) TEMPORARY PAVEMENT MARKING TYPE III TAPE - YELLOW
- (5) SHORT TERM PAVEMENT MARKING

NOTES:
ALTERATIONS TO THE TRAFFIC CONTROL PLAN SHALL BE APPROVED BY THE ENGINEER.
USE TRAFFIC CONTROL STANDARDS 701400, 701401/701402 & 701406 FOR STAGE 2 WORKZONE. USE 701411 & 701456 FOR ALL RAMPS.
(NOT ALL TRAFFIC CONTROL DEVICES & SIGNING SHOWN) ADJUST RAMP OPENINGS IF REQUIRED.

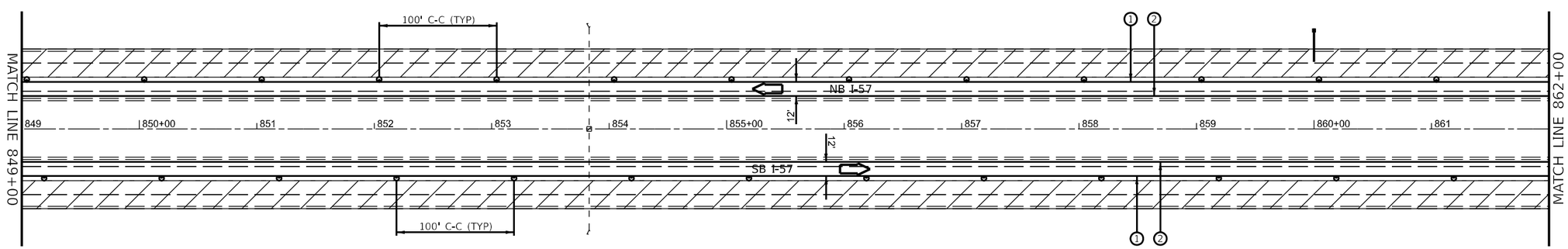


0 50 100 150
SCALE IN FEET

MODEL: STAGE 2 PLAN SHEETS
FILE NAME: pw://bldcpw.bentley.com:PWIDOT/Documents/IDOT Offices/District 3/ORD Projects/D398H62/CADData/CADsheets/66H62-Plan-Stage 2

| | | | |
|---|---|---|---|
| USER NAME = Joseph.Zagar | DESIGNED - | REVISED - | |
| | DRAWN - | REVISED - | |
| PLOT SCALE = 100,000 ' / in. | CHECKED - | REVISED - | |
| PLOT DATE = 12/15/2023 | DATE - | REVISED - | |

**STATE OF ILLINOIS**
**DEPARTMENT OF TRANSPORTATION**

**STAGE 2 TRAFFIC CONTROL**

SCALE: SHEET 14 OF 17 SHEETS STA. TO STA.

| F.A.I RTE. | SECTION | COUNTY | TOTAL SHEETS | SHEET NO. |
|---|---|---|---|---|
| 57 | (38-6,38-5)RS,BRR,CLV | IROQUOIS | 213 | 152 |
| | | CONTRACT NO. 66H62 | | |
| | | ILLINOIS | FED. AID PROJECT | |

Long Section Number

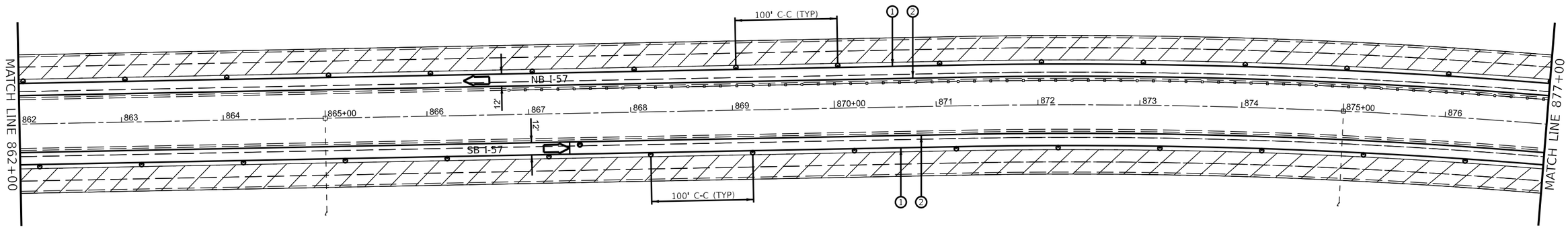


0 50 100 150
SCALE IN FEET

## LEGEND

- DIRECTION INDICATOR BARRICADE WITH STEADY BURN MONODIRECTIONAL LIGHT
- DRUMS WITH MONO-DIRECTIONAL STEADY BURNING LIGHTS
- DIRECTION OF TRAFFIC
- IMPACT ATTENUATOR, TEMPORARY (NON-REDIRECTIVE TL 3)
- TEMPORARY CONCRETE BARRIER
- ARROW BOARD
- CLASS A PATCHING UNDER STRUCTURES
- WORK ZONE
- (A) EXISTING PAVEMENT MARKING
- (1) TEMPORARY PAVEMENT MARKING MODIFIED URETHANE - WHITE
- (2) TEMPORARY PAVEMENT MARKING MODIFIED URETHANE - YELLOW
- (3) TEMPORARY PAVEMENT MARKING TYPE III TAPE - WHITE
- (4) TEMPORARY PAVEMENT MARKING TYPE III TAPE - YELLOW
- (5) SHORT TERM PAVEMENT MARKING

NOTES:
ALTERATIONS TO THE TRAFFIC CONTROL PLAN SHALL BE APPROVED BY THE ENGINEER.
USE TRAFFIC CONTROL STANDARDS 701400, 701401/701402 & 701406 FOR STAGE 2 WORKZONE. USE 701411 & 701456 FOR ALL RAMPS.
(NOT ALL TRAFFIC CONTROL DEVICES & SIGNING SHOWN) ADJUST RAMP OPENINGS IF REQUIRED.

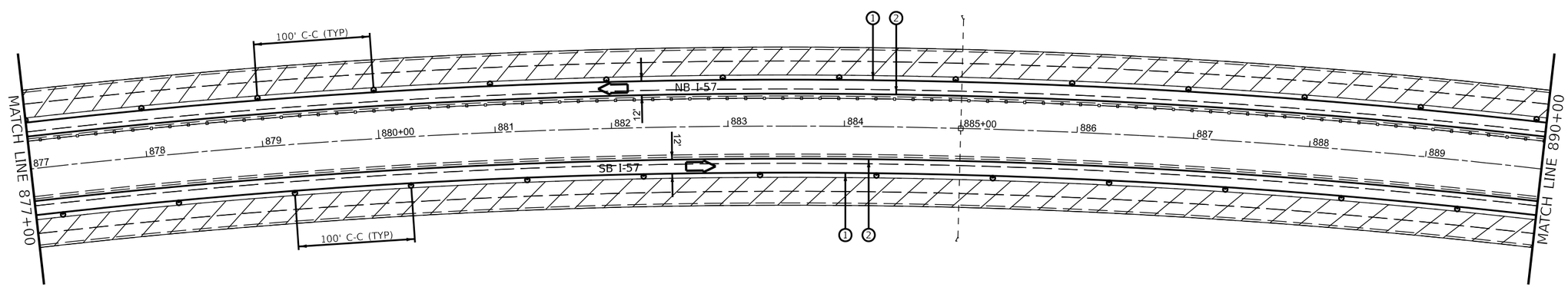


0 50 100 150
SCALE IN FEET

MODEL: STAGE 2 PLAN SHEETS
FILE NAME: pw://bldpw.bentley.com:PWIDOT/Documents/IDOT Offices/District 3/ORD Projects/D398482/CADData/CADsheets/66H62-Plan-Stage 2

| | | | |
|---|---|---|---|
| USER NAME = Joseph.Zagar | DESIGNED - | REVISED - | |
| | DRAWN - | REVISED - | |
| PLOT SCALE = 100,000 ' / in. | CHECKED - | REVISED - | |
| PLOT DATE = 12/15/2023 | DATE - | REVISED - | |

**STATE OF ILLINOIS**
**DEPARTMENT OF TRANSPORTATION**

**STAGE 2 TRAFFIC CONTROL**

SCALE: SHEET 15 OF 17 SHEETS STA. TO STA.

| F.A.I RTE. | SECTION | COUNTY | TOTAL SHEETS | SHEET NO. |
|---|---|---|---|---|
| 57 | (38-6,38-5)RS,BRR,CLV | IROQUOIS | 213 | 153 |
| | | CONTRACT NO. 66H62 | | |
| | ILLINOIS | FED. AID PROJECT | | |

Long Section Number

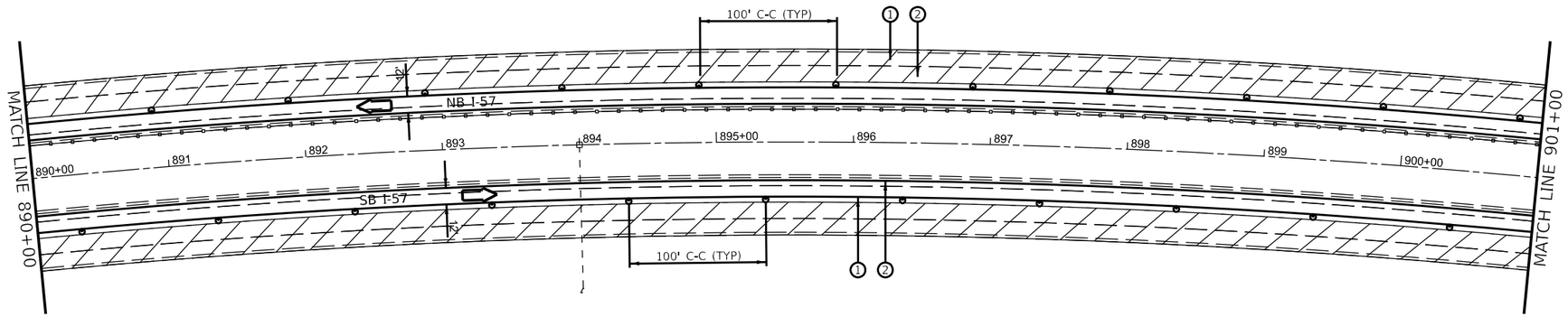


0 50 100 150
SCALE IN FEET

## LEGEND

- DIRECTION INDICATOR BARRICADE WITH STEADY BURN MONODIRECTIONAL LIGHT
- DRUMS WITH MONO-DIRECTIONAL STEADY BURNING LIGHTS
- DIRECTION OF TRAFFIC
- IMPACT ATTENUATOR, TEMPORARY (NON-REDIRECTIVE TL 3)
- TEMPORARY CONCRETE BARRIER
- ARROW BOARD
- CLASS A PATCHING UNDER STRUCTURES
- WORK ZONE
- (A) EXISTING PAVEMENT MARKING
- (1) TEMPORARY PAVEMENT MARKING MODIFIED URETHANE - WHITE
- (2) TEMPORARY PAVEMENT MARKING MODIFIED URETHANE - YELLOW
- (3) TEMPORARY PAVEMENT MARKING TYPE III TAPE - WHITE
- (4) TEMPORARY PAVEMENT MARKING TYPE III TAPE - YELLOW
- (5) SHORT TERM PAVEMENT MARKING

NOTES:
ALTERATIONS TO THE TRAFFIC CONTROL PLAN SHALL BE APPROVED BY THE ENGINEER.
USE TRAFFIC CONTROL STANDARDS 701400, 701401/701402 & 701406 FOR STAGE 2 WORKZONE. USE 701411 & 701456 FOR ALL RAMPS.
(NOT ALL TRAFFIC CONTROL DEVICES & SIGNING SHOWN) ADJUST RAMP OPENINGS IF REQUIRED.

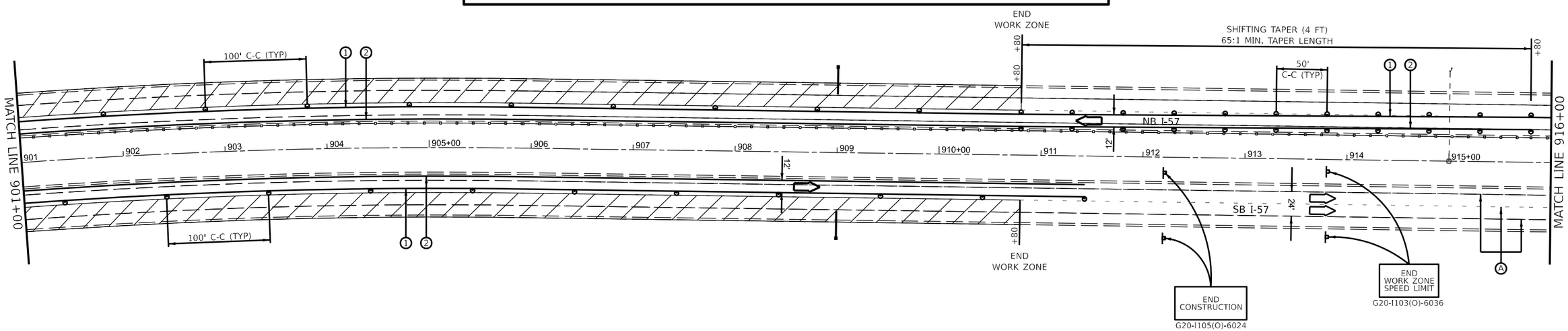


0 50 100 150
SCALE IN FEET

MODEL: STAGE 2 PLAN SHEETS
FILE NAME: pw://idot-pw.bentley.com:PWIDOT/Documents/IDOT Offices/District 3/ORD Projects/D366H62/CADData/CADsheets/66H62-Plan-Stage 2

| | | | |
|---|---|---|---|
| USER NAME = Joseph.Zagar | DESIGNED - | REVISED - | |
| | DRAWN - | REVISED - | |
| PLOT SCALE = 100.000 ' / in. | CHECKED - | REVISED - | |
| PLOT DATE = 12/15/2023 | DATE - | REVISED - | |

**STATE OF ILLINOIS**
**DEPARTMENT OF TRANSPORTATION**

**STAGE 2 TRAFFIC CONTROL**

SCALE: | SHEET 16 OF 17 SHEETS | STA. | TO STA.

| F.A.I RTE. | SECTION | COUNTY | TOTAL SHEETS | SHEET NO. |
|---|---|---|---|---|
| 57 | (38-6,38-5)RS,BRR,CLV | IROQUOIS | 213 | 154 |
| | | CONTRACT NO. 66H62 | | |
| | | ILLINOIS | FED. AID PROJECT | |

Long Section Number

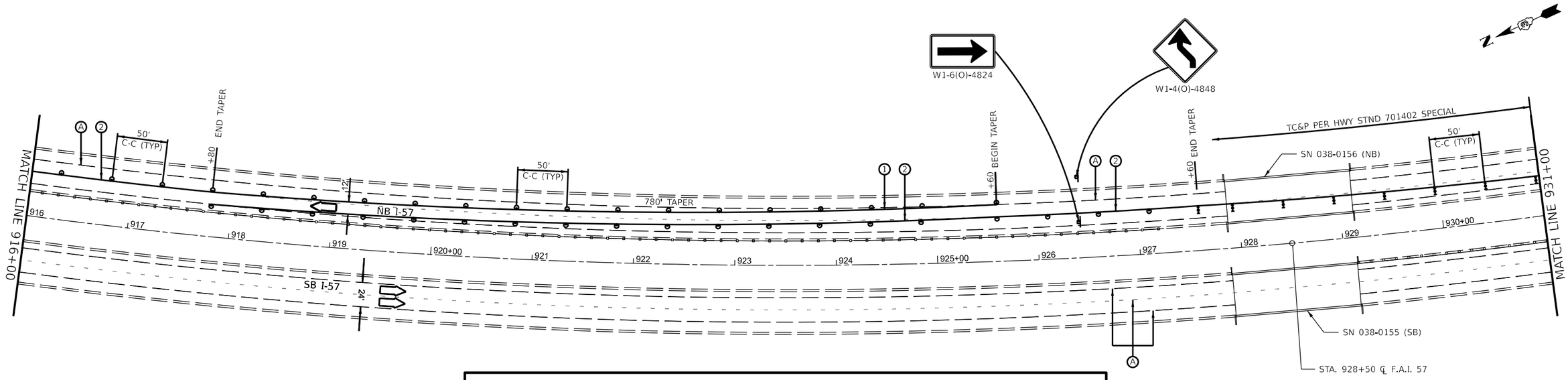


0 50 100 150
SCALE IN FEET

## LEGEND

- DIRECTION INDICATOR BARRICADE WITH STEADY BURN MONODIRECTIONAL LIGHT
- DRUMS WITH MONO-DIRECTIONAL STEADY BURNING LIGHTS
- DIRECTION OF TRAFFIC
- IMPACT ATTENUATOR, TEMPORARY (NON-REDIRECTIVE TL 3)
- TEMPORARY CONCRETE BARRIER
- ARROW BOARD
- CLASS A PATCHING UNDER STRUCTURES
- WORK ZONE
- (A) EXISTING PAVEMENT MARKING
- (1) TEMPORARY PAVEMENT MARKING MODIFIED URETHANE - WHITE
- (2) TEMPORARY PAVEMENT MARKING MODIFIED URETHANE - YELLOW
- (3) TEMPORARY PAVEMENT MARKING TYPE III TAPE - WHITE
- (4) TEMPORARY PAVEMENT MARKING TYPE III TAPE - YELLOW
- (5) SHORT TERM PAVEMENT MARKING

NOTES:
ALTERATIONS TO THE TRAFFIC CONTROL PLAN SHALL BE APPROVED BY THE ENGINEER.
USE TRAFFIC CONTROL STANDARDS 701400, 701401/701402 & 701406 FOR STAGE 2 WORKZONE. USE 701411 & 701456 FOR ALL RAMPS.
(NOT ALL TRAFFIC CONTROL DEVICES & SIGNING SHOWN) ADJUST RAMP OPENINGS IF REQUIRED.

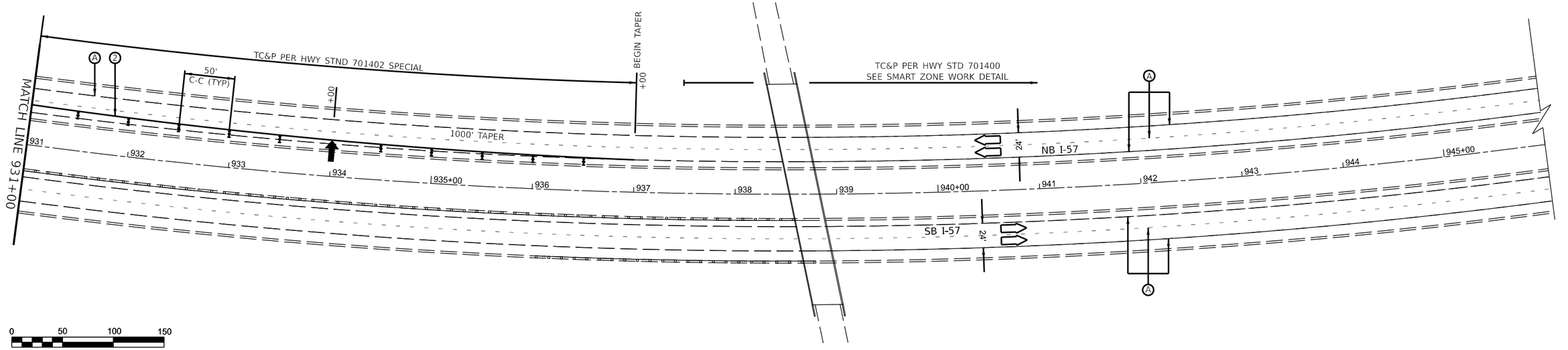


0 50 100 150
SCALE IN FEET

MODEL: STAGE 2 PLAN SHEETS
FILE NAME: pw://illinois.bentley.com:PWIDOT/Documents/IDOT Offices/District 3/ORD Projects/D398H62/CAD/Data/CADsheets/66H62-PlanStage 2

| | | | |
|---|---|---|---|
| USER NAME = Joseph.Zagar | DESIGNED - | REVISED - | |
| | DRAWN - | REVISED - | |
| PLOT SCALE = 100.000 ' / in. | CHECKED - | REVISED - | |
| PLOT DATE = 12/15/2023 | DATE - | REVISED - | |

**STATE OF ILLINOIS**
**DEPARTMENT OF TRANSPORTATION**

**STAGE 2 TRAFFIC CONTROL**

SCALE: | SHEET 17 OF 17 SHEETS | STA. | TO STA.

| F.A.I RTE. | SECTION | COUNTY | TOTAL SHEETS | SHEET NO. |
|---|---|---|---|---|
| 57 | (38-6,38-5)RS,BRR,CLV | IROQUOIS | 213 | 155 |

CONTRACT NO. 66H62

ILLINOIS | FED. AID PROJECT

Long Section Number

## LEGEND

- DIRECTION INDICATOR BARRICADE WITH STEADY BURN MONODIRECTIONAL LIGHT
- DRUMS WITH MONO-DIRECTIONAL STEADY BURNING LIGHTS
- DIRECTION OF TRAFFIC
- IMPACT ATTENUATOR, TEMPORARY (NON-REDIRECTIVE TL 3)
- TEMPORARY CONCRETE BARRIER
- ARROW BOARD
- CLASS A PATCHING UNDER STRUCTURES
- WORK ZONE
- (A) EXISTING PAVEMENT MARKING
- (1) TEMPORARY PAVEMENT MARKING MODIFIED URETHANE - WHITE
- (2) TEMPORARY PAVEMENT MARKING MODIFIED URETHANE - YELLOW
- (3) TEMPORARY PAVEMENT MARKING TYPE III TAPE - WHITE
- (4) TEMPORARY PAVEMENT MARKING TYPE III TAPE - YELLOW
- (5) SHORT TERM PAVEMENT MARKING

NOTES:
ALTERATIONS TO THE TRAFFIC CONTROL PLAN SHALL BE APPROVED BY THE ENGINEER.
USE TRAFFIC CONTROL STANDARDS 701400, 701401/701402 & 701406 FOR STAGE 3 WORKZONE. USE 701411 & 701456 FOR ALL RAMPS.
(NOT ALL TRAFFIC CONTROL DEVICES & SIGNING SHOWN) ADJUST RAMP OPENINGS IF REQUIRED.

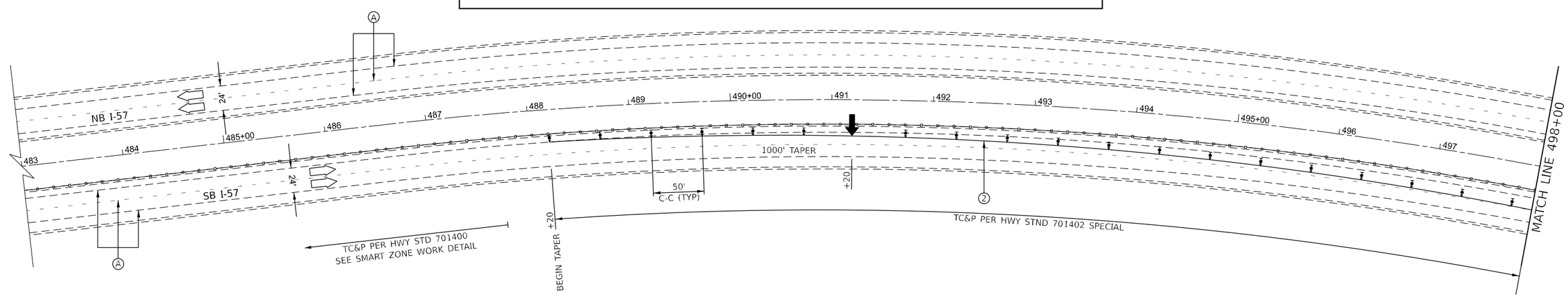


0 50 100 150
SCALE IN FEET

MODEL: Stage 3 Sheets
FILE NAME: pw://ildot-bw.bentley.com:PWIDOT/Documents/IDOT Offices/District 3/ORD Projects/D398H62/CADData/CADsheets/66H62-Plan-Stage 3

| | | | |
|---|---|---|---|
| USER NAME = Cody.M.Johnson | DESIGNED - | REVISED - | |
| | DRAWN - | REVISED - | |
| PLOT SCALE = 100.000 ' / in. | CHECKED - | REVISED - | |
| PLOT DATE = 12/15/2023 | DATE - | REVISED - | |

**STATE OF ILLINOIS**
**DEPARTMENT OF TRANSPORTATION**

**STAGE 3 TRAFFIC CONTROL**

SCALE: | SHEET 1 OF 17 SHEETS | STA. | TO STA.

| F.A.I RTE. | SECTION | COUNTY | TOTAL SHEETS | SHEET NO. |
|---|---|---|---|---|
| 57 | (38-6,38-5)RS,BRR,CLV | IROQUOIS | 213 | 156 |
| | | CONTRACT NO. 66H62 | | |
| | ILLINOIS | FED. AID PROJECT | | |

Long Section Number

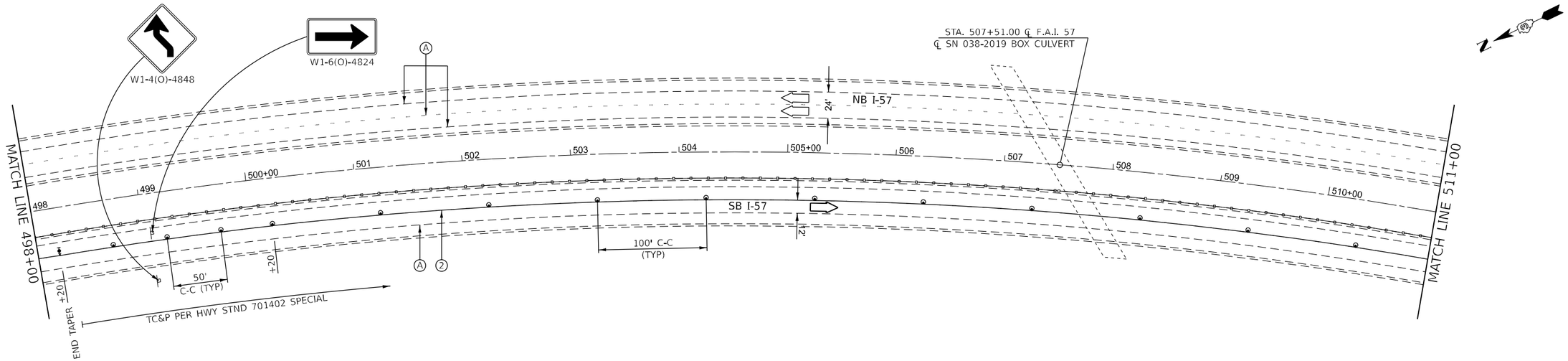


0 50 100 150
SCALE IN FEET

## LEGEND

- DIRECTION INDICATOR BARRICADE WITH STEADY BURN MONODIRECTIONAL LIGHT
- DRUMS WITH MONO-DIRECTIONAL STEADY BURNING LIGHTS
- DIRECTION OF TRAFFIC
- IMPACT ATTENUATOR, TEMPORARY (NON-REDIRECTIVE TL 3)
- TEMPORARY CONCRETE BARRIER
- ARROW BOARD
- CLASS A PATCHING UNDER STRUCTURES
- WORK ZONE
- (A) EXISTING PAVEMENT MARKING
- (1) TEMPORARY PAVEMENT MARKING MODIFIED URETHANE - WHITE
- (2) TEMPORARY PAVEMENT MARKING MODIFIED URETHANE - YELLOW
- (3) TEMPORARY PAVEMENT MARKING TYPE III TAPE - WHITE
- (4) TEMPORARY PAVEMENT MARKING TYPE III TAPE - YELLOW
- (5) SHORT TERM PAVEMENT MARKING

NOTES:
ALTERATIONS TO THE TRAFFIC CONTROL PLAN SHALL BE APPROVED BY THE ENGINEER.
USE TRAFFIC CONTROL STANDARDS 701400, 701401/701402 & 701406 FOR STAGE 3 WORKZONE. USE 701411 & 701456 FOR ALL RAMPS.
(NOT ALL TRAFFIC CONTROL DEVICES & SIGNING SHOWN) ADJUST RAMP OPENINGS IF REQUIRED.

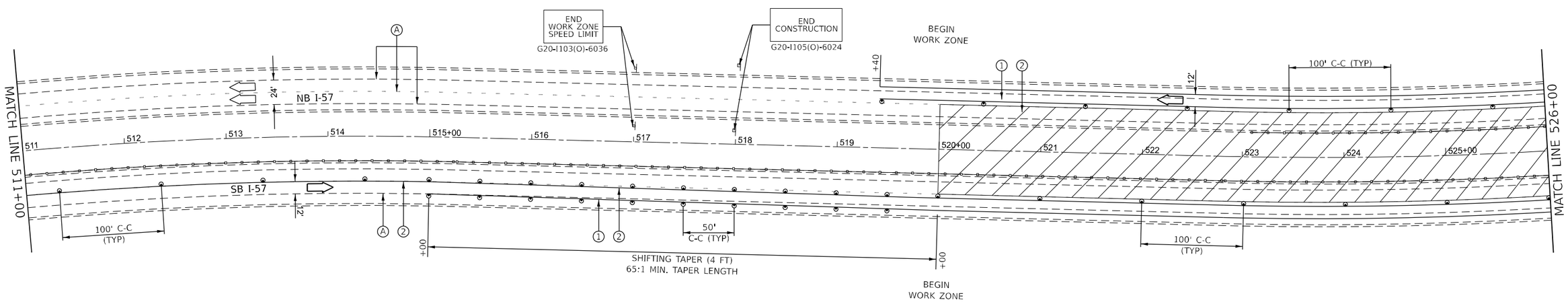


0 50 100 150
SCALE IN FEET

MODEL: Stage 3 Sheets
FILE NAME: pw://ildot-bw.bentley.com:PWIDOT/Documents/IDOT Offices/District 3/ORD Projects/D398H62/CADData/CADsheets/66H62-Plan-Stage 3

| | | | |
|---|---|---|---|
| USER NAME = Cody.M.Johnson | DESIGNED - | REVISED - | |
| | DRAWN - | REVISED - | |
| PLOT SCALE = 100.000 ' / in. | CHECKED - | REVISED - | |
| PLOT DATE = 12/15/2023 | DATE - | REVISED - | |

**STATE OF ILLINOIS**
**DEPARTMENT OF TRANSPORTATION**

**STAGE 3 TRAFFIC CONTROL**

SCALE: | SHEET 2 OF 17 SHEETS | STA. | TO STA.

| F.A.I RTE. | SECTION | COUNTY | TOTAL SHEETS | SHEET NO. |
|---|---|---|---|---|
| 57 | (38-6,38-5)RS,BRR,CLV | IROQUOIS | 213 | 157 |
| | | CONTRACT NO. 66H62 | | |
| | ILLINOIS | FED. AID PROJECT | | |

Long Section Number

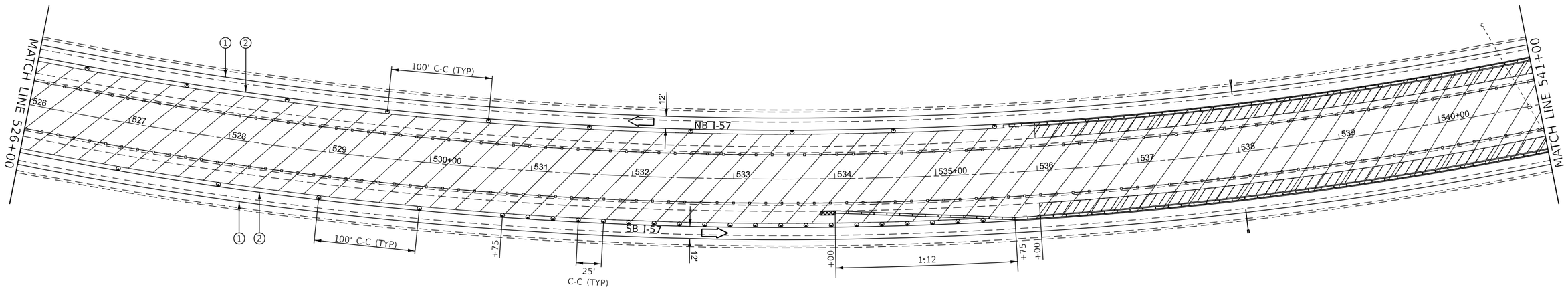


## LEGEND

- DIRECTION INDICATOR BARRICADE WITH STEADY BURN MONODIRECTIONAL LIGHT
- DRUMS WITH MONO-DIRECTIONAL STEADY BURNING LIGHTS
- DIRECTION OF TRAFFIC
- IMPACT ATTENUATOR, TEMPORARY (NON-REDIRECTIVE TL 3)
- TEMPORARY CONCRETE BARRIER
- ARROW BOARD
- CLASS A PATCHING UNDER STRUCTURES
- WORK ZONE
- (A) EXISTING PAVEMENT MARKING
- (1) TEMPORARY PAVEMENT MARKING MODIFIED URETHANE - WHITE
- (2) TEMPORARY PAVEMENT MARKING MODIFIED URETHANE - YELLOW
- (3) TEMPORARY PAVEMENT MARKING TYPE III TAPE - WHITE
- (4) TEMPORARY PAVEMENT MARKING TYPE III TAPE - YELLOW
- (5) SHORT TERM PAVEMENT MARKING

NOTES:
ALTERATIONS TO THE TRAFFIC CONTROL PLAN SHALL BE APPROVED BY THE ENGINEER.
USE TRAFFIC CONTROL STANDARDS 701400, 701401/701402 & 701406 FOR STAGE 3 WORKZONE. USE 701411 & 701456 FOR ALL RAMPS.
(NOT ALL TRAFFIC CONTROL DEVICES & SIGNING SHOWN) ADJUST RAMP OPENINGS IF REQUIRED.

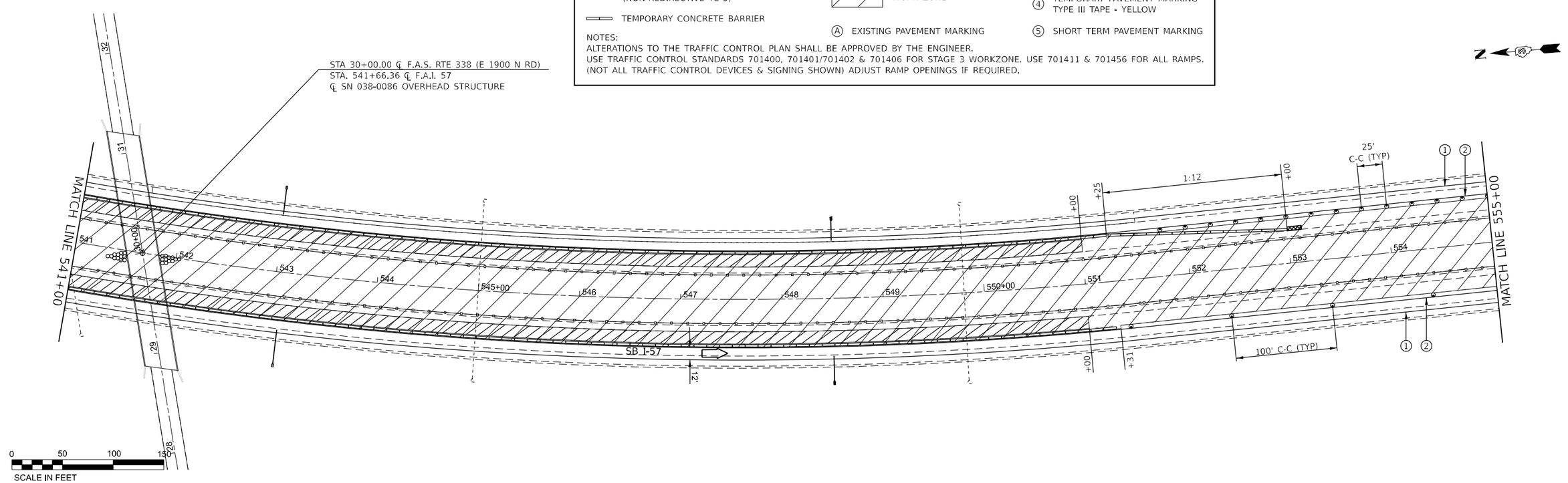


MODEL: Stage 3 Sheets
FILE NAME: pw://ildot.bentley.com:PWIDOT/Documents/IDOT Offices/District 3/ORD Projects/D398H62/CADData/CADsheets/66H62-Plan-Stage 3

| | | | |
|---|---|---|---|
| USER NAME = Cody.M.Johnson | DESIGNED - | REVISED - | |
| | DRAWN - | REVISED - | |
| PLOT SCALE = 100.000 ' / in. | CHECKED - | REVISED - | |
| PLOT DATE = 12/15/2023 | DATE - | REVISED - | |

**STATE OF ILLINOIS**
**DEPARTMENT OF TRANSPORTATION**

**STAGE 3 TRAFFIC CONTROL**

SCALE: | SHEET 3 OF 17 SHEETS | STA. | TO STA.

| F.A.I RTE. | SECTION | COUNTY | TOTAL SHEETS | SHEET NO. |
|---|---|---|---|---|
| 57 | (38-6,38-5)RS,BRR,CLV | IROQUOIS | 213 | 158 |
| | | CONTRACT NO. 66H62 | | |
| | ILLINOIS | FED. AID PROJECT | | |

Long Section Number

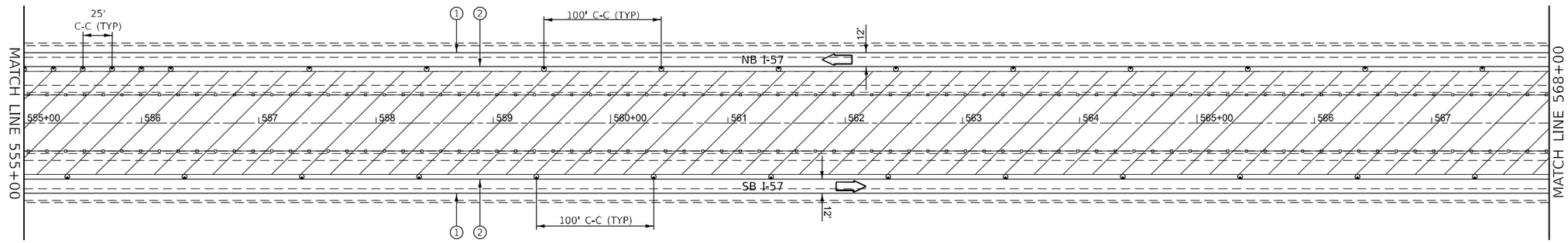


0 50 100 150
SCALE IN FEET

## LEGEND

- DIRECTION INDICATOR BARRICADE WITH STEADY BURN MONODIRECTIONAL LIGHT
- DRUMS WITH MONO-DIRECTIONAL STEADY BURNING LIGHTS
- DIRECTION OF TRAFFIC
- IMPACT ATTENUATOR, TEMPORARY (NON-REDIRECTIVE TL 3)
- TEMPORARY CONCRETE BARRIER
- ARROW BOARD
- CLASS A PATCHING UNDER STRUCTURES
- WORK ZONE
- (A) EXISTING PAVEMENT MARKING
- (1) TEMPORARY PAVEMENT MARKING MODIFIED URETHANE - WHITE
- (2) TEMPORARY PAVEMENT MARKING MODIFIED URETHANE - YELLOW
- (3) TEMPORARY PAVEMENT MARKING TYPE III TAPE - WHITE
- (4) TEMPORARY PAVEMENT MARKING TYPE III TAPE - YELLOW
- (5) SHORT TERM PAVEMENT MARKING

NOTES:
ALTERATIONS TO THE TRAFFIC CONTROL PLAN SHALL BE APPROVED BY THE ENGINEER.
USE TRAFFIC CONTROL STANDARDS 701400, 701401/701402 & 701406 FOR STAGE 3 WORKZONE. USE 701411 & 701456 FOR ALL RAMPS.
(NOT ALL TRAFFIC CONTROL DEVICES & SIGNING SHOWN) ADJUST RAMP OPENINGS IF REQUIRED.

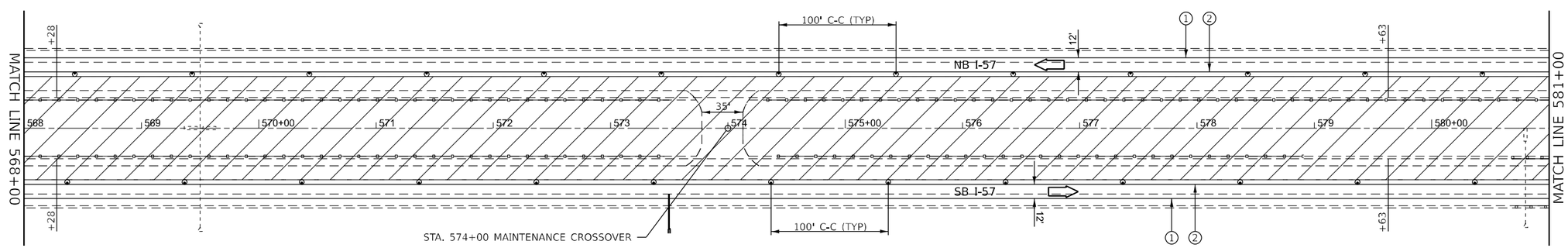


0 50 100 150
SCALE IN FEET

MODEL: Stage 3 Sheets
FILE NAME: pw://ildot-pw.bentley.com:PWIDOT/Documents/IDOT Offices/District 3/ORD Projects/D398H62/CADData/CADsheets/66H62-Plan-Stage 3

| | | | |
|---|---|---|---|
| USER NAME = Cody.M.Johnson | DESIGNED - | REVISED - | |
| | DRAWN - | REVISED - | |
| PLOT SCALE = 100.000 ' / in. | CHECKED - | REVISED - | |
| PLOT DATE = 12/15/2023 | DATE - | REVISED - | |

**STATE OF ILLINOIS**
**DEPARTMENT OF TRANSPORTATION**

**STAGE 3 TRAFFIC CONTROL**

SCALE: | SHEET 4 OF 17 SHEETS | STA. | TO STA.

| F.A.I RTE. | SECTION | COUNTY | TOTAL SHEETS | SHEET NO. |
|---|---|---|---|---|
| 57 | (38-6,38-5)RS,BRR,CLV | IROQUOIS | 213 | 159 |

CONTRACT NO. 66H62
ILLINOIS | FED. AID PROJECT

Long Section Number

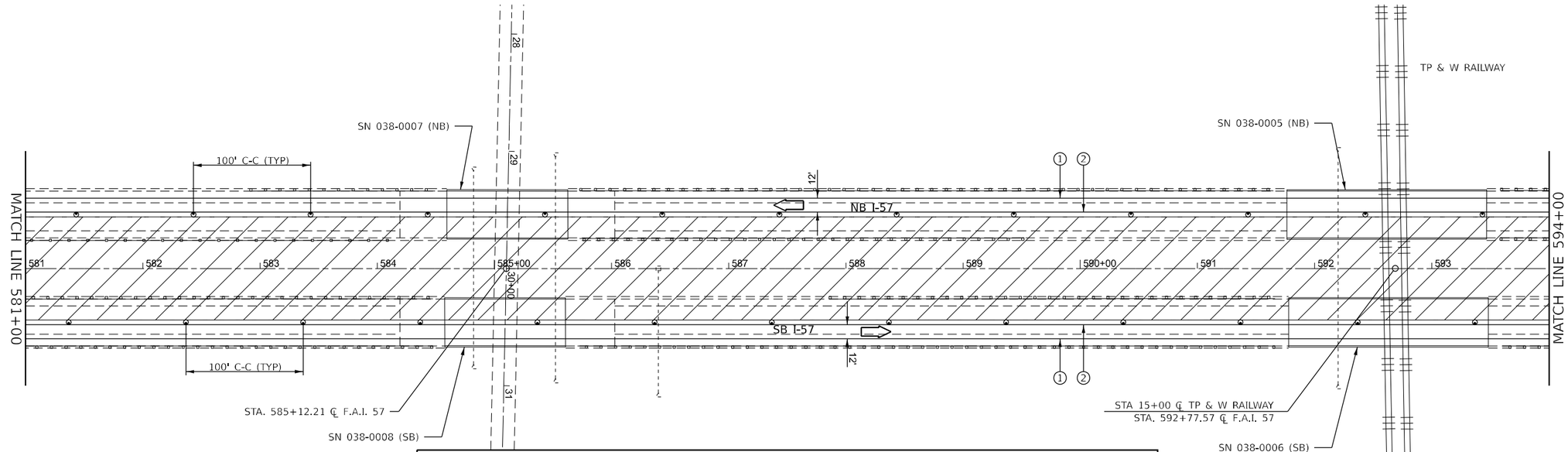


0 50 100 150
SCALE IN FEET

## LEGEND

- DIRECTION INDICATOR BARRICADE WITH STEADY BURN MONODIRECTIONAL LIGHT
- DRUMS WITH MONO-DIRECTIONAL STEADY BURNING LIGHTS
- DIRECTION OF TRAFFIC
- IMPACT ATTENUATOR, TEMPORARY (NON-REDIRECTIVE TL 3)
- TEMPORARY CONCRETE BARRIER
- ARROW BOARD
- CLASS A PATCHING UNDER STRUCTURES
- WORK ZONE
- (A) EXISTING PAVEMENT MARKING
- (1) TEMPORARY PAVEMENT MARKING MODIFIED URETHANE - WHITE
- (2) TEMPORARY PAVEMENT MARKING MODIFIED URETHANE - YELLOW
- (3) TEMPORARY PAVEMENT MARKING TYPE III TAPE - WHITE
- (4) TEMPORARY PAVEMENT MARKING TYPE III TAPE - YELLOW
- (5) SHORT TERM PAVEMENT MARKING

NOTES:
ALTERATIONS TO THE TRAFFIC CONTROL PLAN SHALL BE APPROVED BY THE ENGINEER.
USE TRAFFIC CONTROL STANDARDS 701400, 701401/701402 & 701406 FOR STAGE 3 WORKZONE. USE 701411 & 701456 FOR ALL RAMPS.
(NOT ALL TRAFFIC CONTROL DEVICES & SIGNING SHOWN) ADJUST RAMP OPENINGS IF REQUIRED.

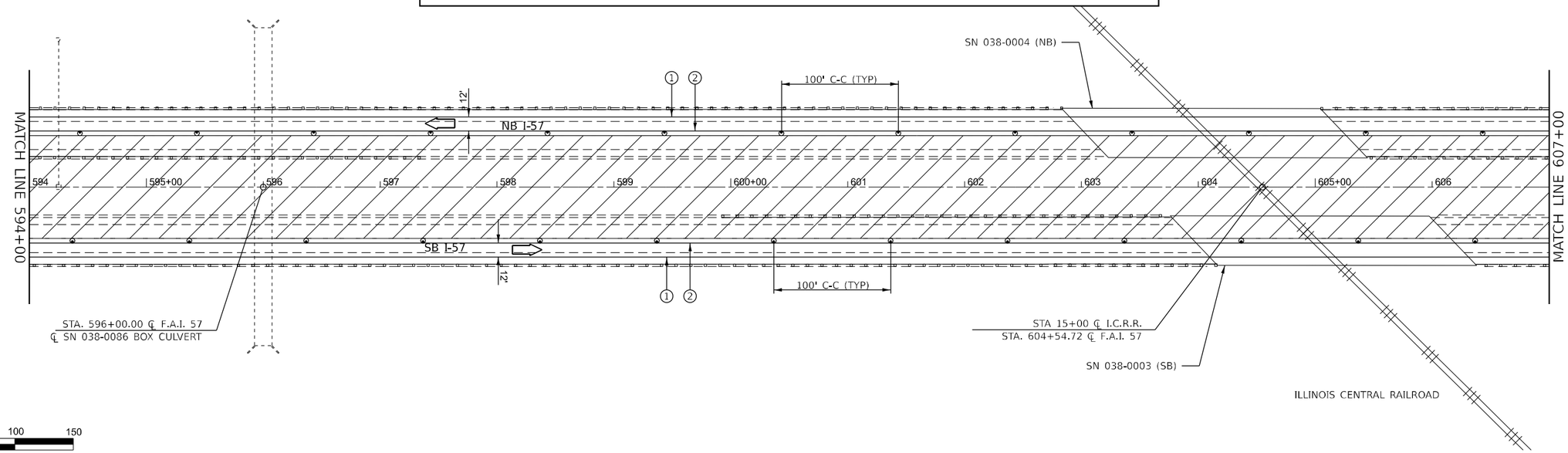


0 50 100 150
SCALE IN FEET

MODEL: Stage 3 Sheets
FILE NAME: pw://ildot-pw.bentley.com:PWIDOT/Documents/IDOT Offices/District 3/ORD Projects/D398H62/CADData/CADsheets/66H62-Plan-Stage 3

| | | | |
|---|---|---|---|
| USER NAME = Cody.M.Johnson | DESIGNED - | REVISED - | |
| | DRAWN - | REVISED - | |
| PLOT SCALE = 100.000 ' / in. | CHECKED - | REVISED - | |
| PLOT DATE = 12/15/2023 | DATE - | REVISED - | |

**STATE OF ILLINOIS**
**DEPARTMENT OF TRANSPORTATION**

**STAGE 3 TRAFFIC CONTROL**

SCALE: | SHEET 5 OF 17 SHEETS | STA. | TO STA.

| F.A.I RTE. | SECTION | COUNTY | TOTAL SHEETS | SHEET NO. |
|---|---|---|---|---|
| 57 | (38-6,38-5)RS,BRR,CLV | IROQUOIS | 213 | 160 |

CONTRACT NO. 66H62

ILLINOIS | FED. AID PROJECT

Long Section Number

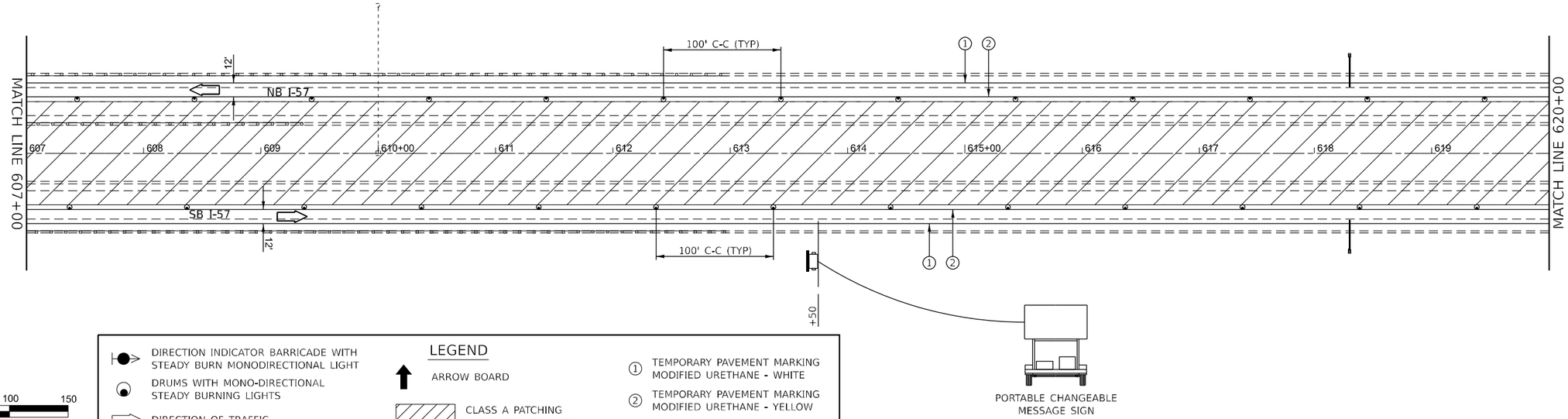


0 50 100 150
SCALE IN FEET

## LEGEND

- DIRECTION INDICATOR BARRICADE WITH STEADY BURN MONODIRECTIONAL LIGHT
- DRUMS WITH MONO-DIRECTIONAL STEADY BURNING LIGHTS
- DIRECTION OF TRAFFIC
- IMPACT ATTENUATOR, TEMPORARY (NON-REDIRECTIVE TL 3)
- TEMPORARY CONCRETE BARRIER
- ARROW BOARD
- CLASS A PATCHING UNDER STRUCTURES
- WORK ZONE
- (A) EXISTING PAVEMENT MARKING
- (1) TEMPORARY PAVEMENT MARKING MODIFIED URETHANE - WHITE
- (2) TEMPORARY PAVEMENT MARKING MODIFIED URETHANE - YELLOW
- (3) TEMPORARY PAVEMENT MARKING TYPE III TAPE - WHITE
- (4) TEMPORARY PAVEMENT MARKING TYPE III TAPE - YELLOW
- (5) SHORT TERM PAVEMENT MARKING

NOTES:
ALTERATIONS TO THE TRAFFIC CONTROL PLAN SHALL BE APPROVED BY THE ENGINEER.
USE TRAFFIC CONTROL STANDARDS 701400, 701401/701402 & 701406 FOR STAGE 3 WORKZONE. USE 701411 & 701456 FOR ALL RAMPS.
(NOT ALL TRAFFIC CONTROL DEVICES & SIGNING SHOWN) ADJUST RAMP OPENINGS IF REQUIRED.

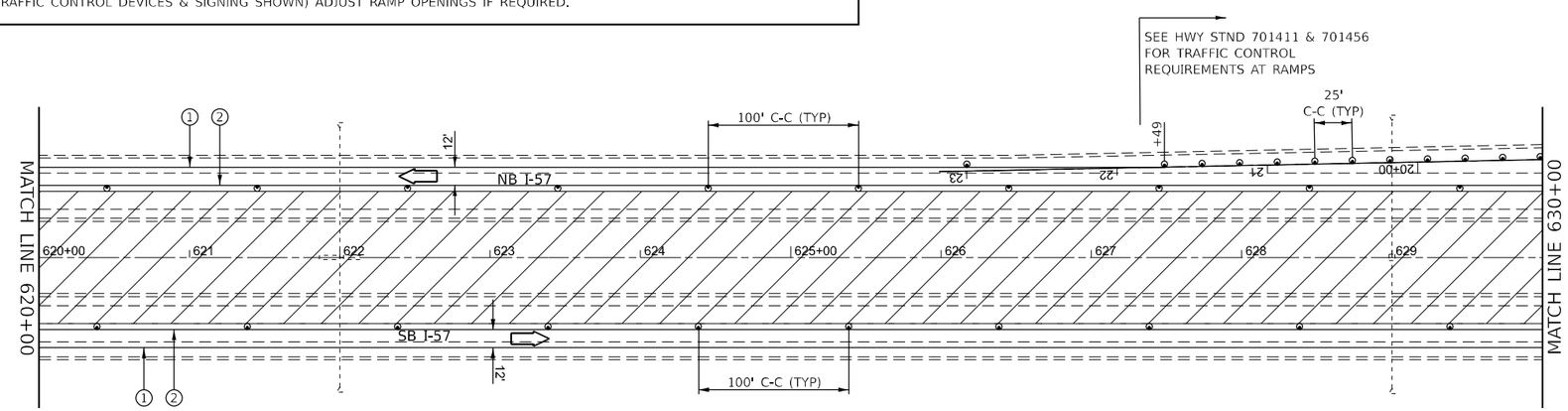


0 50 100 150
SCALE IN FEET

MODEL: Stage 3 Sheets
FILE NAME: pw://ildot-pw.bentley.com:PWIDOT/Documents/IDOT Offices/District 3/ORD Projects/D398H62/CADData/CADsheets/66H62-Plan-Stage 3

| | | | |
|---|---|---|---|
| USER NAME = Cody.M.Johnson | DESIGNED - | REVISED - | |
| | DRAWN - | REVISED - | |
| PLOT SCALE = 100.000 ' / in. | CHECKED - | REVISED - | |
| PLOT DATE = 12/15/2023 | DATE - | REVISED - | |

**STATE OF ILLINOIS**
**DEPARTMENT OF TRANSPORTATION**

**STAGE 3 TRAFFIC CONTROL**

SCALE: | SHEET 6 OF 17 SHEETS | STA. | TO STA.

| F.A.I RTE. | SECTION | COUNTY | TOTAL SHEETS | SHEET NO. |
|---|---|---|---|---|
| 57 | (38-6,38-5)RS,BRR,CLV | IROQUOIS | 213 | 161 |
| | | CONTRACT NO. 66H62 | | |
| | ILLINOIS | FED. AID PROJECT | | |

Long Section Number

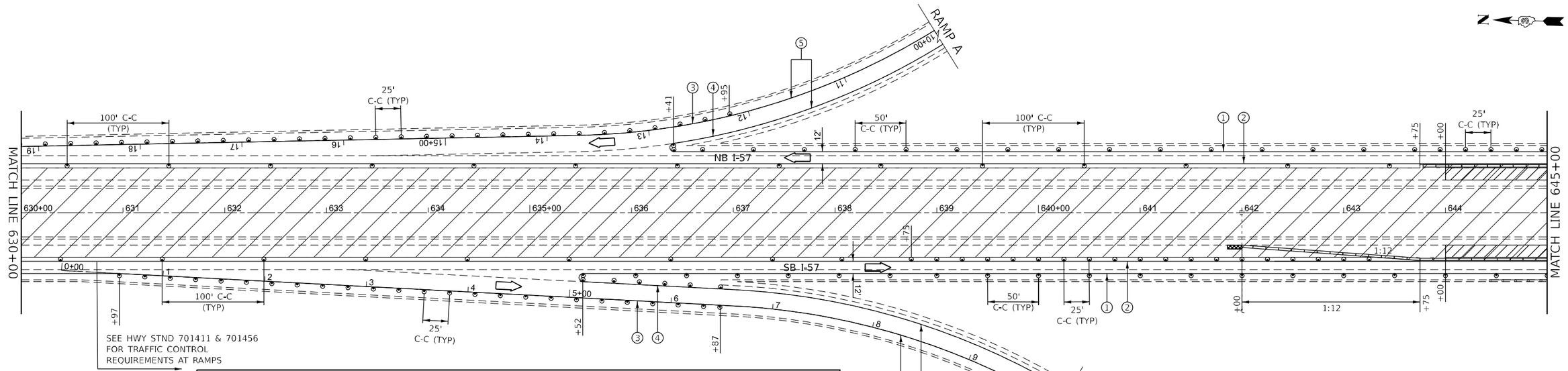


## LEGEND

- DIRECTION INDICATOR BARRICADE WITH STEADY BURN MONODIRECTIONAL LIGHT
- DRUMS WITH MONO-DIRECTIONAL STEADY BURNING LIGHTS
- DIRECTION OF TRAFFIC
- IMPACT ATTENUATOR, TEMPORARY (NON-REDIRECTIVE TL 3)
- TEMPORARY CONCRETE BARRIER
- ARROW BOARD
- CLASS A PATCHING UNDER STRUCTURES
- WORK ZONE
- (A) EXISTING PAVEMENT MARKING
- (1) TEMPORARY PAVEMENT MARKING MODIFIED URETHANE - WHITE
- (2) TEMPORARY PAVEMENT MARKING MODIFIED URETHANE - YELLOW
- (3) TEMPORARY PAVEMENT MARKING TYPE III TAPE - WHITE
- (4) TEMPORARY PAVEMENT MARKING TYPE III TAPE - YELLOW
- (5) SHORT TERM PAVEMENT MARKING

NOTES:
ALTERATIONS TO THE TRAFFIC CONTROL PLAN SHALL BE APPROVED BY THE ENGINEER.
USE TRAFFIC CONTROL STANDARDS 701400, 701401/701402 & 701406 FOR STAGE 3 WORKZONE. USE 701411 & 701456 FOR ALL RAMPS.
(NOT ALL TRAFFIC CONTROL DEVICES & SIGNING SHOWN) ADJUST RAMP OPENINGS IF REQUIRED.

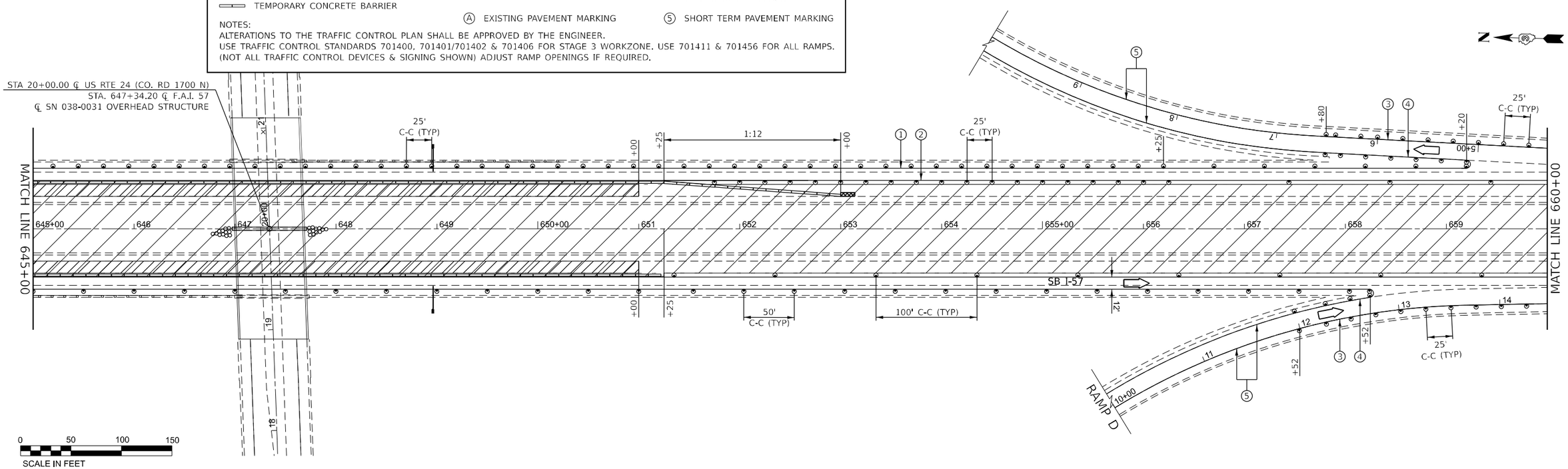


MODEL: Stage 3 Sheets
FILE NAME: pw://ildot.bentley.com:PWIDOT/Documents/IDOT Offices/District 3/ORD Projects/D398H62/CADData/CADsheets/66H62-Plan-Stage 3

| | | | |
|---|---|---|---|
| USER NAME = Cody.M.Johnson | DESIGNED - | REVISED - | |
| | DRAWN - | REVISED - | |
| PLOT SCALE = 100.000 ' / in. | CHECKED - | REVISED - | |
| PLOT DATE = 12/15/2023 | DATE - | REVISED - | |

**STATE OF ILLINOIS**
**DEPARTMENT OF TRANSPORTATION**

**STAGE 3 TRAFFIC CONTROL**

SCALE: | SHEET 7 OF 17 SHEETS | STA. | TO STA.

| F.A.I RTE. | SECTION | COUNTY | TOTAL SHEETS | SHEET NO. |
|---|---|---|---|---|
| 57 | (38-6,38-5)RS,BRR,CLV | IROQUOIS | 213 | 162 |
| | | CONTRACT NO. 66H62 | | |
| | ILLINOIS | FED. AID PROJECT | | |

Long Section Number

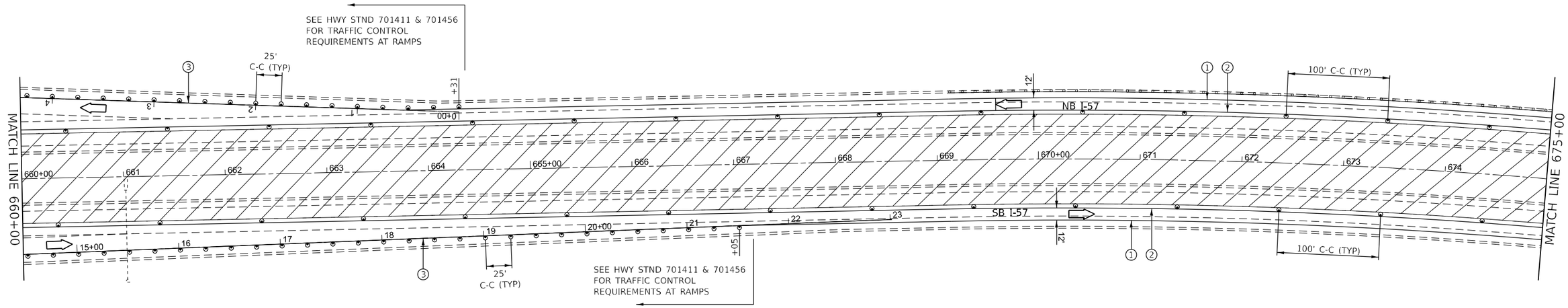


0 50 100 150
SCALE IN FEET

## LEGEND

- DIRECTION INDICATOR BARRICADE WITH STEADY BURN MONODIRECTIONAL LIGHT
- DRUMS WITH MONO-DIRECTIONAL STEADY BURNING LIGHTS
- DIRECTION OF TRAFFIC
- IMPACT ATTENUATOR, TEMPORARY (NON-REDIRECTIVE TL 3)
- TEMPORARY CONCRETE BARRIER
- ARROW BOARD
- CLASS A PATCHING UNDER STRUCTURES
- WORK ZONE
- (A) EXISTING PAVEMENT MARKING
- (1) TEMPORARY PAVEMENT MARKING MODIFIED URETHANE - WHITE
- (2) TEMPORARY PAVEMENT MARKING MODIFIED URETHANE - YELLOW
- (3) TEMPORARY PAVEMENT MARKING TYPE III TAPE - WHITE
- (4) TEMPORARY PAVEMENT MARKING TYPE III TAPE - YELLOW
- (5) SHORT TERM PAVEMENT MARKING

NOTES:
ALTERATIONS TO THE TRAFFIC CONTROL PLAN SHALL BE APPROVED BY THE ENGINEER.
USE TRAFFIC CONTROL STANDARDS 701400, 701401/701402 & 701406 FOR STAGE 3 WORKZONE. USE 701411 & 701456 FOR ALL RAMPS.
(NOT ALL TRAFFIC CONTROL DEVICES & SIGNING SHOWN) ADJUST RAMP OPENINGS IF REQUIRED.

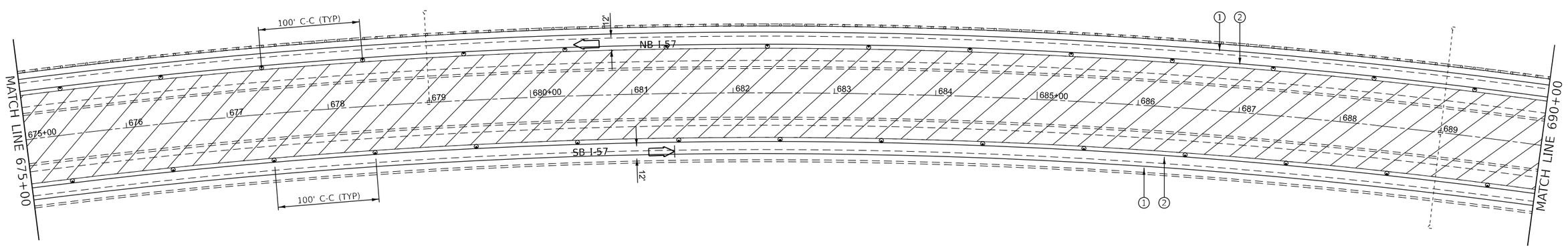


0 50 100 150
SCALE IN FEET

MODEL: Stage 3 Sheets
FILE NAME: pw://ildot-bw.bentley.com:PWIDOT/Documents/IDOT Offices/District 3/ORD Projects/D398H62/CADData/CADsheets/66H62-Plan-Stage 3

| | | | |
|---|---|---|---|
| USER NAME = Cody.M.Johnson | DESIGNED - | REVISED - | |
| | DRAWN - | REVISED - | |
| PLOT SCALE = 100.000 ' / in. | CHECKED - | REVISED - | |
| PLOT DATE = 12/15/2023 | DATE - | REVISED - | |

**STATE OF ILLINOIS**
**DEPARTMENT OF TRANSPORTATION**

**STAGE 3 TRAFFIC CONTROL**

SCALE: | SHEET 8 OF 17 SHEETS | STA. | TO STA.

| F.A.I RTE. | SECTION | COUNTY | TOTAL SHEETS | SHEET NO. |
|---|---|---|---|---|
| 57 | (38-6,38-5)RS,BRR,CLV | IROQUOIS | 213 | 163 |
| | | CONTRACT NO. 66H62 | | |
| | ILLINOIS | FED. AID PROJECT | | |

Long Section Number

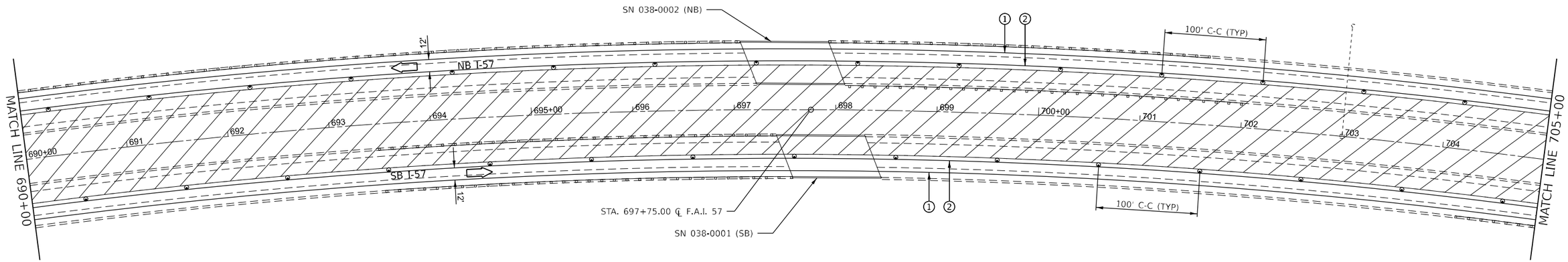


0 50 100 150
SCALE IN FEET

## LEGEND

- DIRECTION INDICATOR BARRICADE WITH STEADY BURN MONODIRECTIONAL LIGHT
- DRUMS WITH MONO-DIRECTIONAL STEADY BURNING LIGHTS
- DIRECTION OF TRAFFIC
- IMPACT ATTENUATOR, TEMPORARY (NON-REDIRECTIVE TL 3)
- TEMPORARY CONCRETE BARRIER
- ARROW BOARD
- CLASS A PATCHING UNDER STRUCTURES
- WORK ZONE
- (A) EXISTING PAVEMENT MARKING
- (1) TEMPORARY PAVEMENT MARKING MODIFIED URETHANE - WHITE
- (2) TEMPORARY PAVEMENT MARKING MODIFIED URETHANE - YELLOW
- (3) TEMPORARY PAVEMENT MARKING TYPE III TAPE - WHITE
- (4) TEMPORARY PAVEMENT MARKING TYPE III TAPE - YELLOW
- (5) SHORT TERM PAVEMENT MARKING

NOTES:
ALTERATIONS TO THE TRAFFIC CONTROL PLAN SHALL BE APPROVED BY THE ENGINEER.
USE TRAFFIC CONTROL STANDARDS 701400, 701401/701402 & 701406 FOR STAGE 3 WORKZONE. USE 701411 & 701456 FOR ALL RAMPS.
(NOT ALL TRAFFIC CONTROL DEVICES & SIGNING SHOWN) ADJUST RAMP OPENINGS IF REQUIRED.

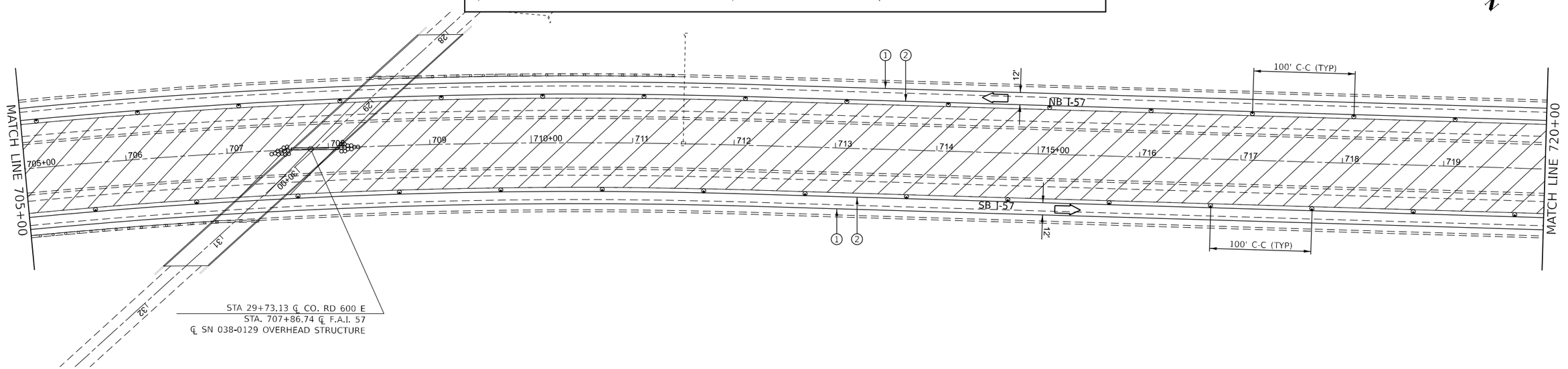


0 50 100 150
SCALE IN FEET

MODEL: Stage 3 Sheets
FILE NAME: pw://ildot-pw.bentley.com:PWIDOT/Documents/IDOT Offices/District 3/ORD Projects/D398H62/CADData/CADsheets/66H62-Plan-Stage 3

| | | | |
|---|---|---|---|
| USER NAME = Cody.M.Johnson | DESIGNED - | REVISED - | |
| | DRAWN - | REVISED - | |
| PLOT SCALE = 100.000 ' / in. | CHECKED - | REVISED - | |
| PLOT DATE = 12/15/2023 | DATE - | REVISED - | |

**STATE OF ILLINOIS**
**DEPARTMENT OF TRANSPORTATION**

**STAGE 3 TRAFFIC CONTROL**

SCALE: | SHEET 9 OF 17 SHEETS | STA. | TO STA.

| F.A.I RTE. | SECTION | COUNTY | TOTAL SHEETS | SHEET NO. |
|---|---|---|---|---|
| 57 | (38-6,38-5)RS,BRR,CLV | IROQUOIS | 213 | 164 |
| | | CONTRACT NO. 66H62 | | |
| | ILLINOIS | FED. AID PROJECT | | |

Long Section Number

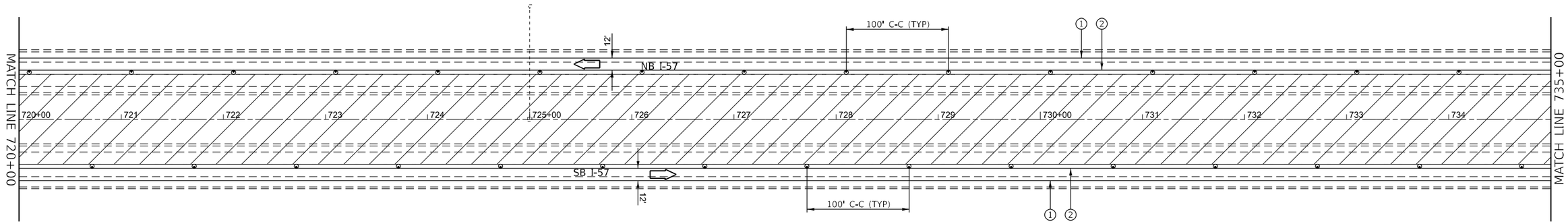


0 50 100 150
SCALE IN FEET

## LEGEND

- DIRECTION INDICATOR BARRICADE WITH STEADY BURN MONODIRECTIONAL LIGHT
- DRUMS WITH MONO-DIRECTIONAL STEADY BURNING LIGHTS
- DIRECTION OF TRAFFIC
- IMPACT ATTENUATOR, TEMPORARY (NON-REDIRECTIVE TL 3)
- TEMPORARY CONCRETE BARRIER
- ARROW BOARD
- CLASS A PATCHING UNDER STRUCTURES
- WORK ZONE
- (A) EXISTING PAVEMENT MARKING
- (1) TEMPORARY PAVEMENT MARKING MODIFIED URETHANE - WHITE
- (2) TEMPORARY PAVEMENT MARKING MODIFIED URETHANE - YELLOW
- (3) TEMPORARY PAVEMENT MARKING TYPE III TAPE - WHITE
- (4) TEMPORARY PAVEMENT MARKING TYPE III TAPE - YELLOW
- (5) SHORT TERM PAVEMENT MARKING

NOTES:
ALTERATIONS TO THE TRAFFIC CONTROL PLAN SHALL BE APPROVED BY THE ENGINEER.
USE TRAFFIC CONTROL STANDARDS 701400, 701401/701402 & 701406 FOR STAGE 3 WORKZONE. USE 701411 & 701456 FOR ALL RAMPS.
(NOT ALL TRAFFIC CONTROL DEVICES & SIGNING SHOWN) ADJUST RAMP OPENINGS IF REQUIRED.

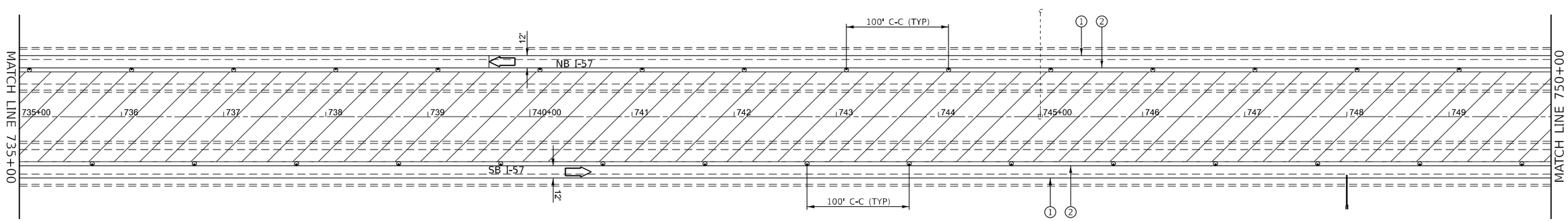


0 50 100 150
SCALE IN FEET

MODEL: Stage 3 Sheets
FILE NAME: pw://ildot-pw.bentley.com:PWIDOT/Documents/IDOT Offices/District 3/ORD Projects/D398H62/CADData/CADsheets/66H62-PlanSStage 3

| | | | |
|---|---|---|---|
| USER NAME = Cody.M.Johnson | DESIGNED - | REVISED - | |
| | DRAWN - | REVISED - | |
| PLOT SCALE = 100.000 ' / in. | CHECKED - | REVISED - | |
| PLOT DATE = 12/15/2023 | DATE - | REVISED - | |

**STATE OF ILLINOIS**
**DEPARTMENT OF TRANSPORTATION**

**STAGE 3 TRAFFIC CONTROL**

SCALE: | SHEET 10 OF 17 SHEETS | STA. | TO STA.

| F.A.I RTE. | SECTION | COUNTY | TOTAL SHEETS | SHEET NO. |
|---|---|---|---|---|
| 57 | (38-6,38-5)RS,BRR,CLV | IROQUOIS | 213 | 165 |
| | | CONTRACT NO. 66H62 | | |
| | ILLINOIS | FED. AID PROJECT | | |

Long Section Number

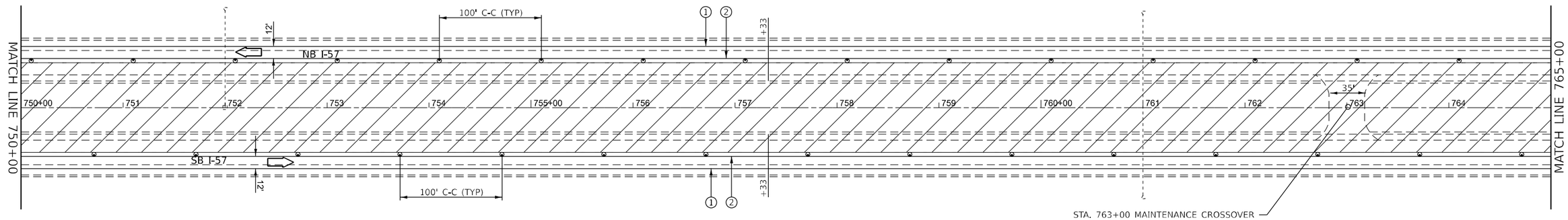


0 50 100 150
SCALE IN FEET

## LEGEND

- DIRECTION INDICATOR BARRICADE WITH STEADY BURN MONODIRECTIONAL LIGHT
- DRUMS WITH MONO-DIRECTIONAL STEADY BURNING LIGHTS
- DIRECTION OF TRAFFIC
- IMPACT ATTENUATOR, TEMPORARY (NON-REDIRECTIVE TL 3)
- TEMPORARY CONCRETE BARRIER
- ARROW BOARD
- CLASS A PATCHING UNDER STRUCTURES
- WORK ZONE
- (A) EXISTING PAVEMENT MARKING
- (1) TEMPORARY PAVEMENT MARKING MODIFIED URETHANE - WHITE
- (2) TEMPORARY PAVEMENT MARKING MODIFIED URETHANE - YELLOW
- (3) TEMPORARY PAVEMENT MARKING TYPE III TAPE - WHITE
- (4) TEMPORARY PAVEMENT MARKING TYPE III TAPE - YELLOW
- (5) SHORT TERM PAVEMENT MARKING

NOTES:
ALTERATIONS TO THE TRAFFIC CONTROL PLAN SHALL BE APPROVED BY THE ENGINEER.
USE TRAFFIC CONTROL STANDARDS 701400, 701401/701402 & 701406 FOR STAGE 3 WORKZONE. USE 701411 & 701456 FOR ALL RAMPS.
(NOT ALL TRAFFIC CONTROL DEVICES & SIGNING SHOWN) ADJUST RAMP OPENINGS IF REQUIRED.

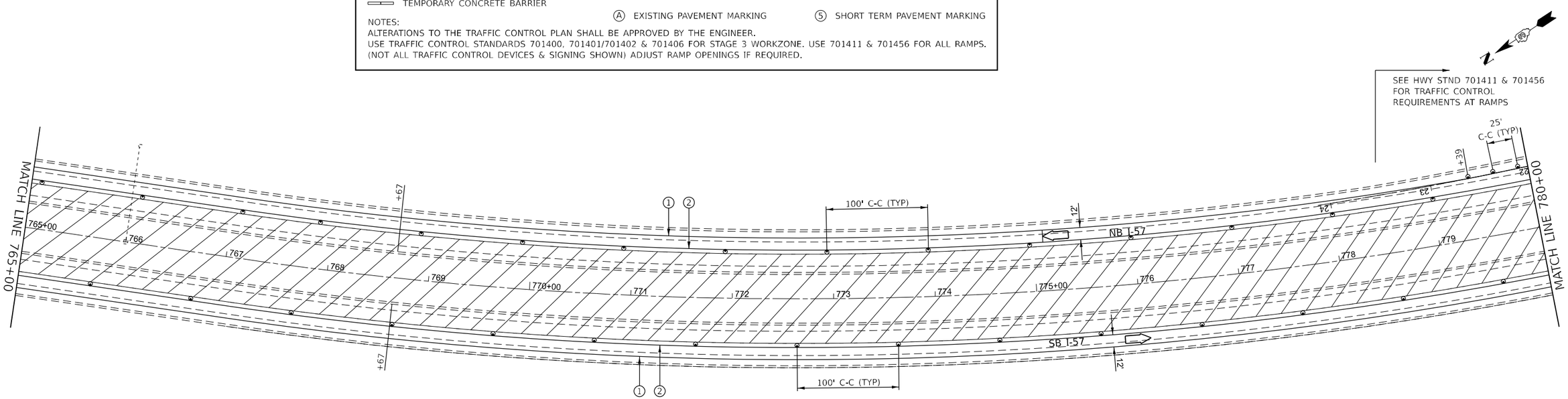


0 50 100 150
SCALE IN FEET

| | | | |
|---|---|---|---|
| USER NAME = Cody.M.Johnson | DESIGNED - | REVISED - | |
| | DRAWN - | REVISED - | |
| PLOT SCALE = 100.000 ' / in. | CHECKED - | REVISED - | |
| PLOT DATE = 12/15/2023 | DATE - | REVISED - | |

**STATE OF ILLINOIS**
**DEPARTMENT OF TRANSPORTATION**

**STAGE 3 TRAFFIC CONTROL**

SCALE: | SHEET 11 OF 17 SHEETS | STA. | TO STA.

| F.A.I RTE. | SECTION | COUNTY | TOTAL SHEETS | SHEET NO. |
|---|---|---|---|---|
| 57 | (38-6,38-5)RS,BRR,CLV | IROQUOIS | 213 | 166 |
| | | CONTRACT NO. 66H62 | | |
| | ILLINOIS | FED. AID PROJECT | | |

Long Section Number

MODEL: Stage 3 Sheets
FILE NAME: pw://ildot-pw.bentley.com:PWIDOT/Documents/IDOT Offices/District 3/ORD Projects/D398H62/CADData/CADsheets/66H62-Plan-Stage 3

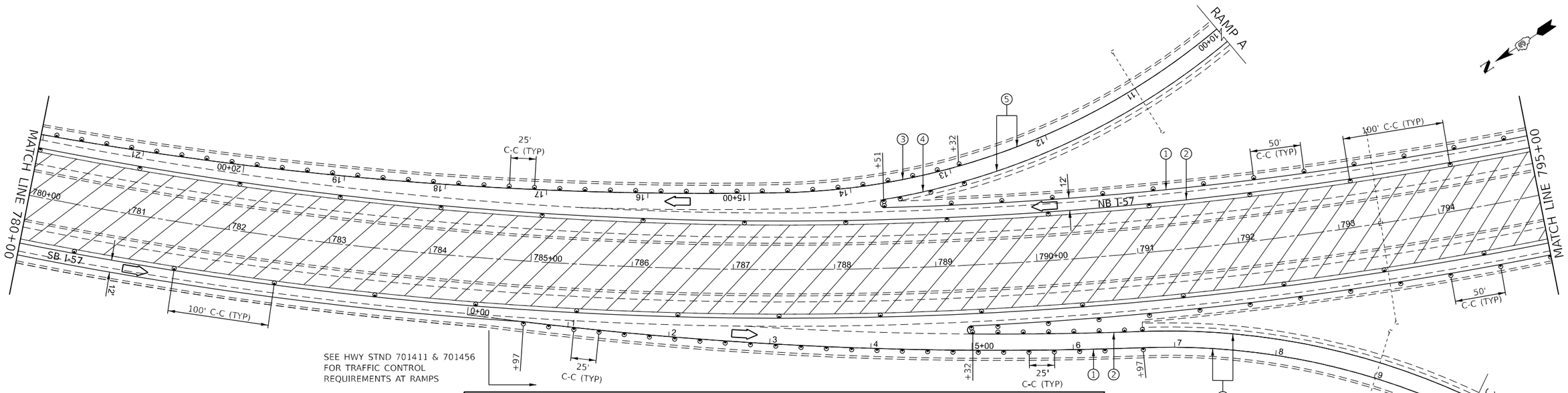


## LEGEND

- DIRECTION INDICATOR BARRICADE WITH STEADY BURN MONODIRECTIONAL LIGHT
- DRUMS WITH MONO-DIRECTIONAL STEADY BURNING LIGHTS
- DIRECTION OF TRAFFIC
- IMPACT ATTENUATOR, TEMPORARY (NON-REDIRECTIVE TL 3)
- TEMPORARY CONCRETE BARRIER
- ARROW BOARD
- CLASS A PATCHING UNDER STRUCTURES
- WORK ZONE
- (A) EXISTING PAVEMENT MARKING
- (1) TEMPORARY PAVEMENT MARKING MODIFIED URETHANE - WHITE
- (2) TEMPORARY PAVEMENT MARKING MODIFIED URETHANE - YELLOW
- (3) TEMPORARY PAVEMENT MARKING TYPE III TAPE - WHITE
- (4) TEMPORARY PAVEMENT MARKING TYPE III TAPE - YELLOW
- (5) SHORT TERM PAVEMENT MARKING

NOTES:
ALTERATIONS TO THE TRAFFIC CONTROL PLAN SHALL BE APPROVED BY THE ENGINEER.
USE TRAFFIC CONTROL STANDARDS 701400, 701401/701402 & 701406 FOR STAGE 3 WORKZONE. USE 701411 & 701456 FOR ALL RAMPS.
(NOT ALL TRAFFIC CONTROL DEVICES & SIGNING SHOWN) ADJUST RAMP OPENINGS IF REQUIRED.

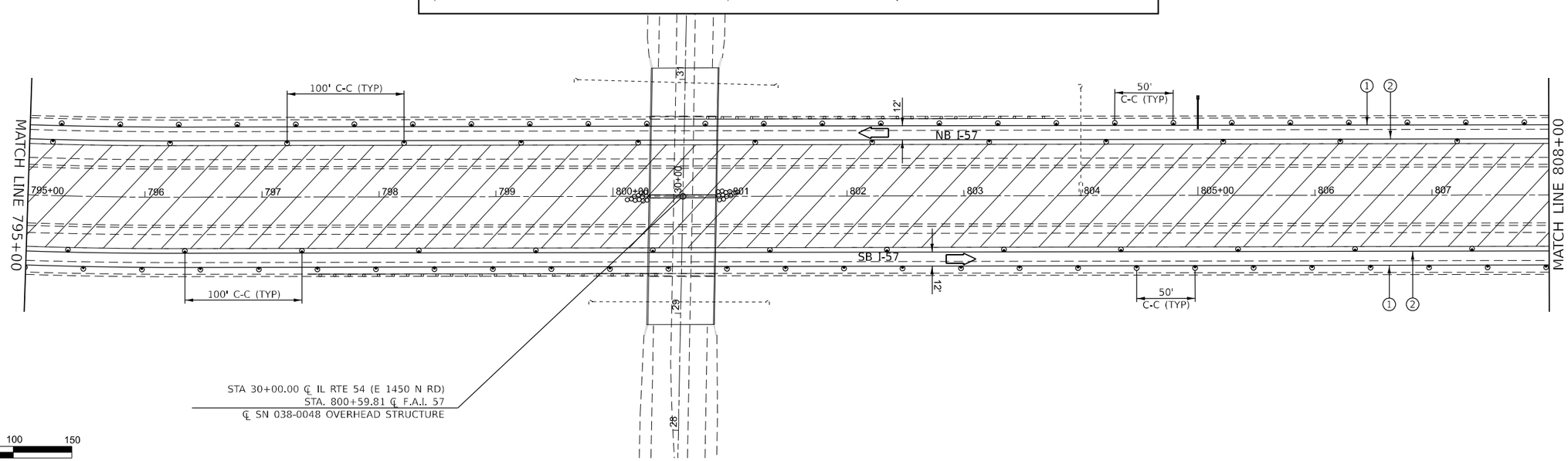


MODEL: Stage 3 Sheets
FILE NAME: pw://ildot-pw.bentley.com:PWIDOT/Documents/IDOT Offices/District 3/ORD Projects/D398H62/CADData/CADsheets/66H62-Plan-Stage 3

| | | | |
|---|---|---|---|
| USER NAME = Cody.M.Johnson | DESIGNED - | REVISED - | |
| | DRAWN - | REVISED - | |
| PLOT SCALE = 100.000 ' / in. | CHECKED - | REVISED - | |
| PLOT DATE = 12/15/2023 | DATE - | REVISED - | |

**STATE OF ILLINOIS**
**DEPARTMENT OF TRANSPORTATION**

**STAGE 3 TRAFFIC CONTROL**

SCALE: | SHEET 12 OF 17 SHEETS | STA. | TO STA.

| F.A.I RTE. | SECTION | COUNTY | TOTAL SHEETS | SHEET NO. |
|---|---|---|---|---|
| 57 | (38-6,38-5)RS,BRR,CLV | IROQUOIS | 213 | 167 |
| | | CONTRACT NO. 66H62 | | |
| | ILLINOIS | FED. AID PROJECT | | |

Long Section Number

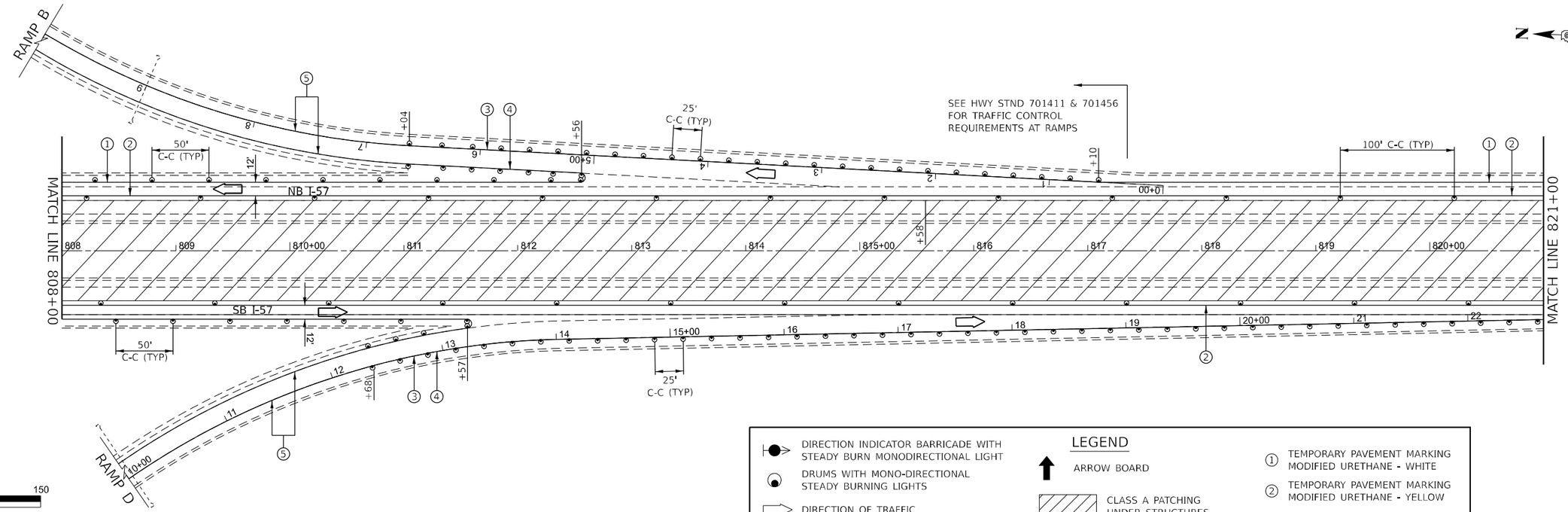


## LEGEND

- DIRECTION INDICATOR BARRICADE WITH STEADY BURN MONODIRECTIONAL LIGHT
- DRUMS WITH MONO-DIRECTIONAL STEADY BURNING LIGHTS
- DIRECTION OF TRAFFIC
- IMPACT ATTENUATOR, TEMPORARY (NON-REDIRECTIVE TL 3)
- TEMPORARY CONCRETE BARRIER
- ARROW BOARD
- CLASS A PATCHING UNDER STRUCTURES
- WORK ZONE
- (A) EXISTING PAVEMENT MARKING
- (1) TEMPORARY PAVEMENT MARKING MODIFIED URETHANE - WHITE
- (2) TEMPORARY PAVEMENT MARKING MODIFIED URETHANE - YELLOW
- (3) TEMPORARY PAVEMENT MARKING TYPE III TAPE - WHITE
- (4) TEMPORARY PAVEMENT MARKING TYPE III TAPE - YELLOW
- (5) SHORT TERM PAVEMENT MARKING

NOTES:
ALTERATIONS TO THE TRAFFIC CONTROL PLAN SHALL BE APPROVED BY THE ENGINEER.
USE TRAFFIC CONTROL STANDARDS 701400, 701401/701402 & 701406 FOR STAGE 3 WORKZONE. USE 701411 & 701456 FOR ALL RAMPS.
(NOT ALL TRAFFIC CONTROL DEVICES & SIGNING SHOWN) ADJUST RAMP OPENINGS IF REQUIRED.

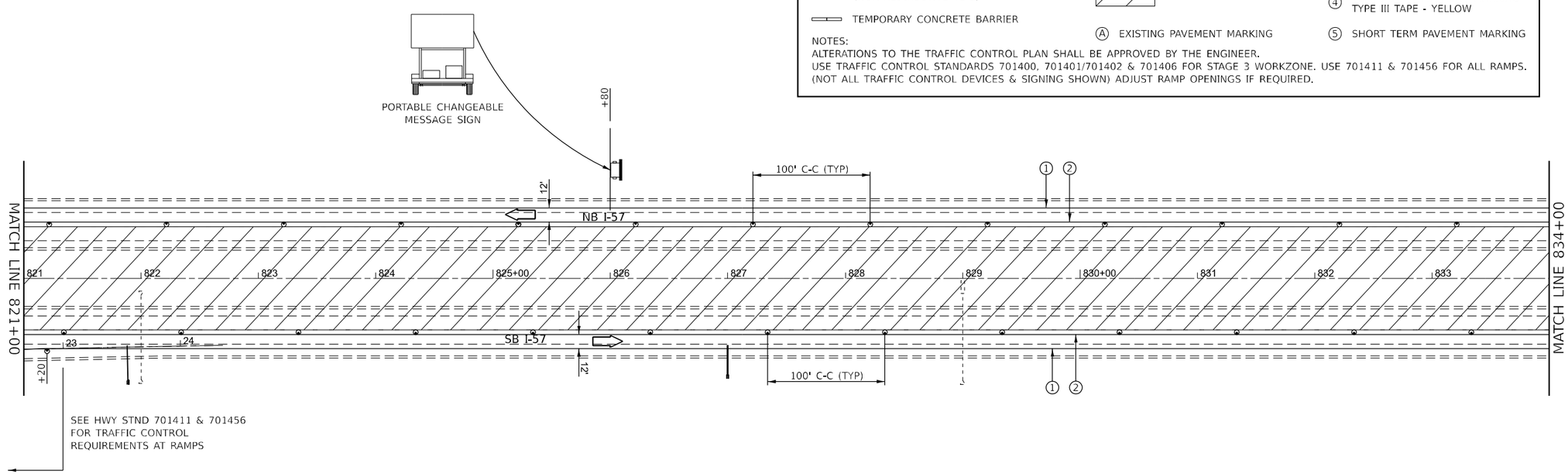


MODEL: Stage 3 Sheets
FILE NAME: pw://ildot-pw.bentley.com:PWIDOT/Documents/IDOT Offices/District 3/ORD Projects/D398H62/CADData/CADdata/66H62-Plan-Stage 3

| | | | |
|---|---|---|---|
| USER NAME = Cody.M.Johnson | DESIGNED - | REVISED - | |
| | DRAWN - | REVISED - | |
| PLOT SCALE = 100.000 ' / in. | CHECKED - | REVISED - | |
| PLOT DATE = 12/15/2023 | DATE - | REVISED - | |

**STATE OF ILLINOIS**
**DEPARTMENT OF TRANSPORTATION**

**STAGE 3 TRAFFIC CONTROL**

SCALE: | SHEET 13 OF 17 SHEETS | STA. | TO STA.

| F.A.I RTE. | SECTION | COUNTY | TOTAL SHEETS | SHEET NO. |
|---|---|---|---|---|
| 57 | (38-6,38-5)RS,BRR,CLV | IROQUOIS | 213 | 168 |
| | | CONTRACT NO. 66H62 | | |
| | ILLINOIS | FED. AID PROJECT | | |

Long Section Number

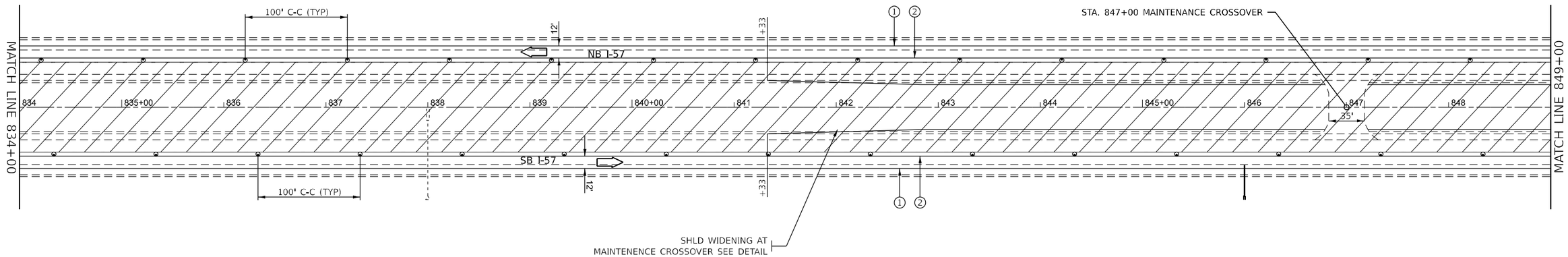


0 50 100 150
SCALE IN FEET

## LEGEND

- DIRECTION INDICATOR BARRICADE WITH STEADY BURN MONODIRECTIONAL LIGHT
- DRUMS WITH MONO-DIRECTIONAL STEADY BURNING LIGHTS
- DIRECTION OF TRAFFIC
- IMPACT ATTENUATOR, TEMPORARY (NON-REDIRECTIVE TL 3)
- TEMPORARY CONCRETE BARRIER
- ARROW BOARD
- CLASS A PATCHING UNDER STRUCTURES
- WORK ZONE
- (A) EXISTING PAVEMENT MARKING
- (1) TEMPORARY PAVEMENT MARKING MODIFIED URETHANE - WHITE
- (2) TEMPORARY PAVEMENT MARKING MODIFIED URETHANE - YELLOW
- (3) TEMPORARY PAVEMENT MARKING TYPE III TAPE - WHITE
- (4) TEMPORARY PAVEMENT MARKING TYPE III TAPE - YELLOW
- (5) SHORT TERM PAVEMENT MARKING

NOTES:
ALTERATIONS TO THE TRAFFIC CONTROL PLAN SHALL BE APPROVED BY THE ENGINEER.
USE TRAFFIC CONTROL STANDARDS 701400, 701401/701402 & 701406 FOR STAGE 3 WORKZONE. USE 701411 & 701456 FOR ALL RAMPS.
(NOT ALL TRAFFIC CONTROL DEVICES & SIGNING SHOWN) ADJUST RAMP OPENINGS IF REQUIRED.

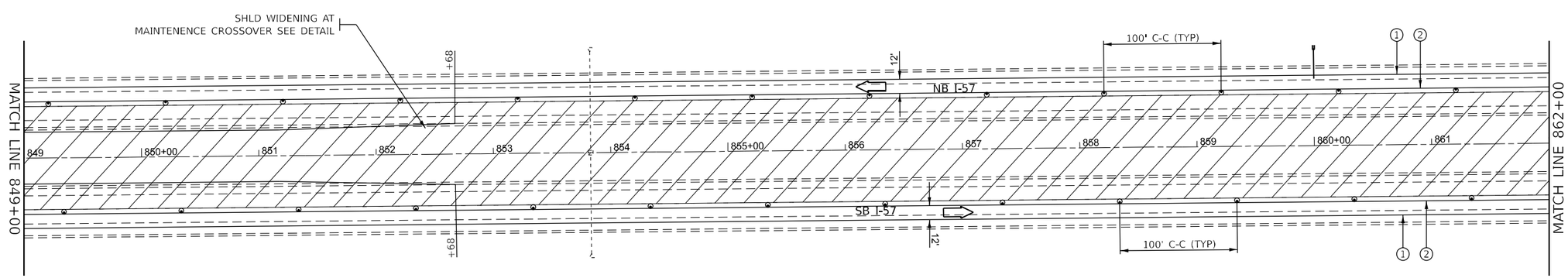


0 50 100 150
SCALE IN FEET

MODEL: Stage 3 Sheets
FILE NAME: pw://ildot-pw.bentley.com:PWIDOT/Documents/IDOT Offices/District 3/ORD Projects/D398H62/CADData/CADsheets/66H62-Plan-Stage 3

| | | | |
|---|---|---|---|
| USER NAME = Cody.M.Johnson | DESIGNED - | REVISED - | |
| | DRAWN - | REVISED - | |
| PLOT SCALE = 100.000 ' / in. | CHECKED - | REVISED - | |
| PLOT DATE = 12/15/2023 | DATE - | REVISED - | |

**STATE OF ILLINOIS**
**DEPARTMENT OF TRANSPORTATION**

**STAGE 3 TRAFFIC CONTROL**

SCALE: | SHEET 14 OF 17 SHEETS | STA. | TO STA.

| F.A.I RTE. | SECTION | COUNTY | TOTAL SHEETS | SHEET NO. |
|---|---|---|---|---|
| 57 | (38-6,38-5)RS,BRR,CLV | IROQUOIS | 213 | 169 |
| | | CONTRACT NO. 66H62 | | |
| | ILLINOIS | FED. AID PROJECT | | |

Long Section Number

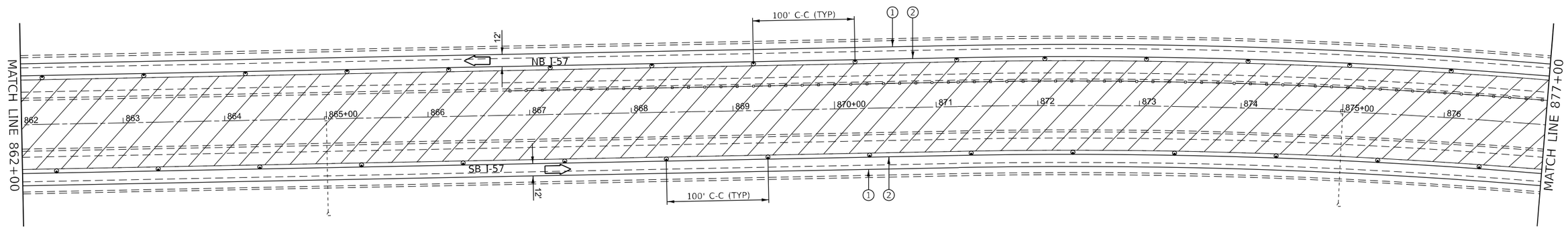


0 50 100 150
SCALE IN FEET

## LEGEND

- DIRECTION INDICATOR BARRICADE WITH STEADY BURN MONODIRECTIONAL LIGHT
- DRUMS WITH MONO-DIRECTIONAL STEADY BURNING LIGHTS
- DIRECTION OF TRAFFIC
- IMPACT ATTENUATOR, TEMPORARY (NON-REDIRECTIVE TL 3)
- TEMPORARY CONCRETE BARRIER
- ARROW BOARD
- CLASS A PATCHING UNDER STRUCTURES
- WORK ZONE
- (A) EXISTING PAVEMENT MARKING
- (1) TEMPORARY PAVEMENT MARKING MODIFIED URETHANE - WHITE
- (2) TEMPORARY PAVEMENT MARKING MODIFIED URETHANE - YELLOW
- (3) TEMPORARY PAVEMENT MARKING TYPE III TAPE - WHITE
- (4) TEMPORARY PAVEMENT MARKING TYPE III TAPE - YELLOW
- (5) SHORT TERM PAVEMENT MARKING

NOTES:
ALTERATIONS TO THE TRAFFIC CONTROL PLAN SHALL BE APPROVED BY THE ENGINEER.
USE TRAFFIC CONTROL STANDARDS 701400, 701401/701402 & 701406 FOR STAGE 3 WORKZONE. USE 701411 & 701456 FOR ALL RAMPS.
(NOT ALL TRAFFIC CONTROL DEVICES & SIGNING SHOWN) ADJUST RAMP OPENINGS IF REQUIRED.

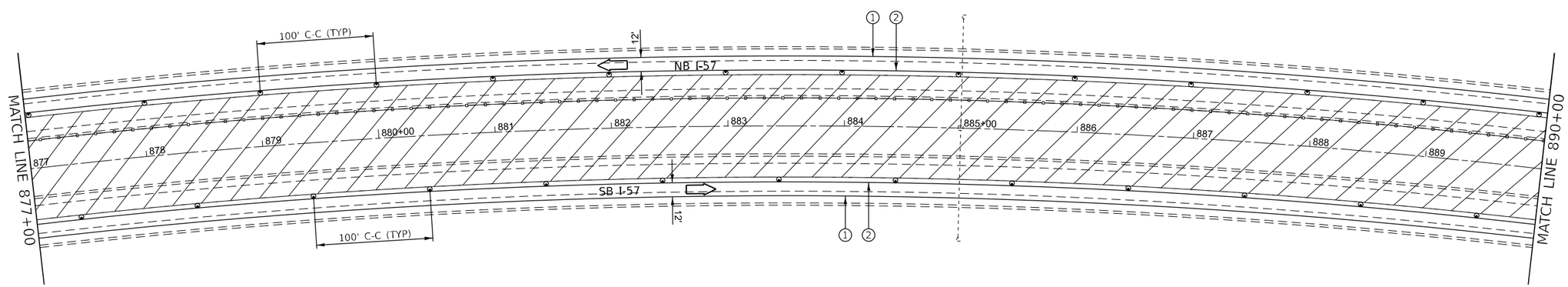


0 50 100 150
SCALE IN FEET

MODEL: Stage 3 Sheets
FILE NAME: pw://ildot-pw.bentley.com:PWIDOT/Documents/IDOT Offices/District 3/ORD Projects/D398H62/CADData/CADsheets/66H62-Plan-Stage 3

| | | | |
|---|---|---|---|
| USER NAME = Cody.M.Johnson | DESIGNED - | REVISED - | |
| | DRAWN - | REVISED - | |
| PLOT SCALE = 100.000 ' / in. | CHECKED - | REVISED - | |
| PLOT DATE = 12/15/2023 | DATE - | REVISED - | |

**STATE OF ILLINOIS**
**DEPARTMENT OF TRANSPORTATION**

**STAGE 3 TRAFFIC CONTROL**

SCALE: | SHEET 15 OF 17 SHEETS | STA. | TO STA.

| F.A.I RTE. | SECTION | COUNTY | TOTAL SHEETS | SHEET NO. |
|---|---|---|---|---|
| 57 | (38-6,38-5)RS,BRR,CLV | IROQUOIS | 213 | 170 |
| | | CONTRACT NO. 66H62 | | |
| | ILLINOIS | FED. AID PROJECT | | |

Long Section Number

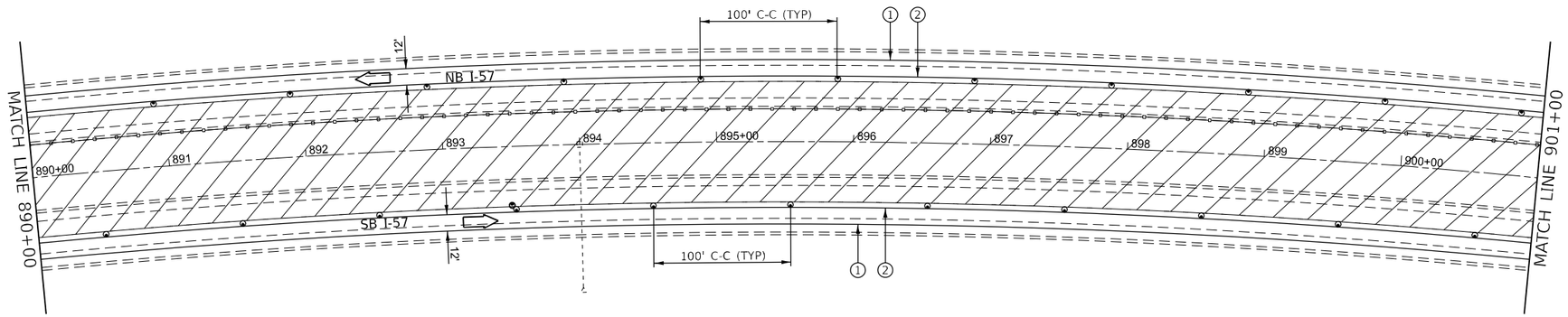


0 50 100 150
SCALE IN FEET

## LEGEND

- DIRECTION INDICATOR BARRICADE WITH STEADY BURN MONODIRECTIONAL LIGHT
- DRUMS WITH MONO-DIRECTIONAL STEADY BURNING LIGHTS
- DIRECTION OF TRAFFIC
- IMPACT ATTENUATOR, TEMPORARY (NON-REDIRECTIVE TL 3)
- TEMPORARY CONCRETE BARRIER
- ARROW BOARD
- CLASS A PATCHING UNDER STRUCTURES
- WORK ZONE
- (A) EXISTING PAVEMENT MARKING
- (1) TEMPORARY PAVEMENT MARKING MODIFIED URETHANE - WHITE
- (2) TEMPORARY PAVEMENT MARKING MODIFIED URETHANE - YELLOW
- (3) TEMPORARY PAVEMENT MARKING TYPE III TAPE - WHITE
- (4) TEMPORARY PAVEMENT MARKING TYPE III TAPE - YELLOW
- (5) SHORT TERM PAVEMENT MARKING

NOTES:
ALTERATIONS TO THE TRAFFIC CONTROL PLAN SHALL BE APPROVED BY THE ENGINEER.
USE TRAFFIC CONTROL STANDARDS 701400, 701401/701402 & 701406 FOR STAGE 3 WORKZONE. USE 701411 & 701456 FOR ALL RAMPS.
(NOT ALL TRAFFIC CONTROL DEVICES & SIGNING SHOWN) ADJUST RAMP OPENINGS IF REQUIRED.

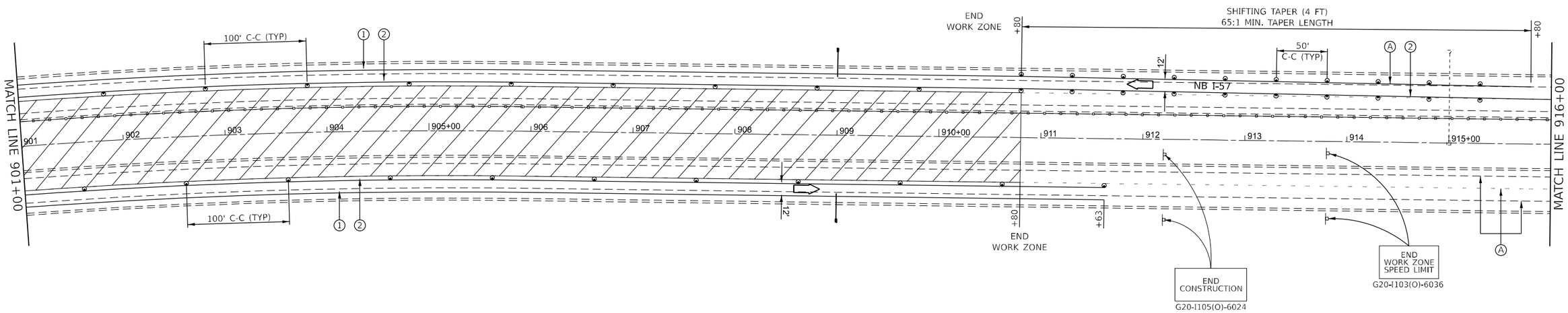


0 50 100 150
SCALE IN FEET

MODEL: Stage 3 Sheets
FILE NAME: pw://ildot-bw.bentley.com:PWIDOT/Documents/IDOT Offices/District 3/ORD Projects/D398H62/CADData/CADsheets/66H62-Plan-Stage 3

| | | | |
|---|---|---|---|
| USER NAME = Cody.M.Johnson | DESIGNED - | REVISED - | |
| | DRAWN - | REVISED - | |
| PLOT SCALE = 100.000 ' / in. | CHECKED - | REVISED - | |
| PLOT DATE = 12/15/2023 | DATE - | REVISED - | |

**STATE OF ILLINOIS**
**DEPARTMENT OF TRANSPORTATION**

**STAGE 3 TRAFFIC CONTROL**

SCALE: | SHEET 16 OF 17 SHEETS | STA. | TO STA.

| F.A.I RTE. | SECTION | COUNTY | TOTAL SHEETS | SHEET NO. |
|---|---|---|---|---|
| 57 | (38-6,38-5)RS,BRR,CLV | IROQUOIS | 213 | 171 |
| | | CONTRACT NO. 66H62 | | |
| | ILLINOIS | FED. AID PROJECT | | |

Long Section Number

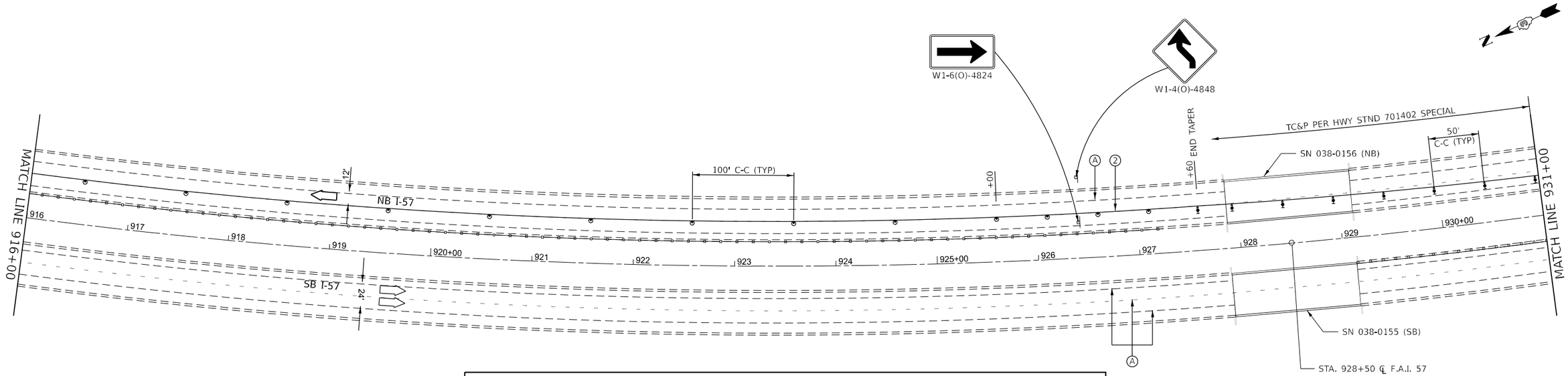


## LEGEND

- DIRECTION INDICATOR BARRICADE WITH STEADY BURN MONODIRECTIONAL LIGHT
- DRUMS WITH MONO-DIRECTIONAL STEADY BURNING LIGHTS
- DIRECTION OF TRAFFIC
- IMPACT ATTENUATOR, TEMPORARY (NON-REDIRECTIVE TL 3)
- TEMPORARY CONCRETE BARRIER
- ARROW BOARD
- CLASS A PATCHING UNDER STRUCTURES
- WORK ZONE
- (A) EXISTING PAVEMENT MARKING
- (1) TEMPORARY PAVEMENT MARKING MODIFIED URETHANE - WHITE
- (2) TEMPORARY PAVEMENT MARKING MODIFIED URETHANE - YELLOW
- (3) TEMPORARY PAVEMENT MARKING TYPE III TAPE - WHITE
- (4) TEMPORARY PAVEMENT MARKING TYPE III TAPE - YELLOW
- (5) SHORT TERM PAVEMENT MARKING

NOTES:
ALTERATIONS TO THE TRAFFIC CONTROL PLAN SHALL BE APPROVED BY THE ENGINEER.
USE TRAFFIC CONTROL STANDARDS 701400, 701401/701402 & 701406 FOR STAGE 3 WORKZONE. USE 701411 & 701456 FOR ALL RAMPS.
(NOT ALL TRAFFIC CONTROL DEVICES & SIGNING SHOWN) ADJUST RAMP OPENINGS IF REQUIRED.

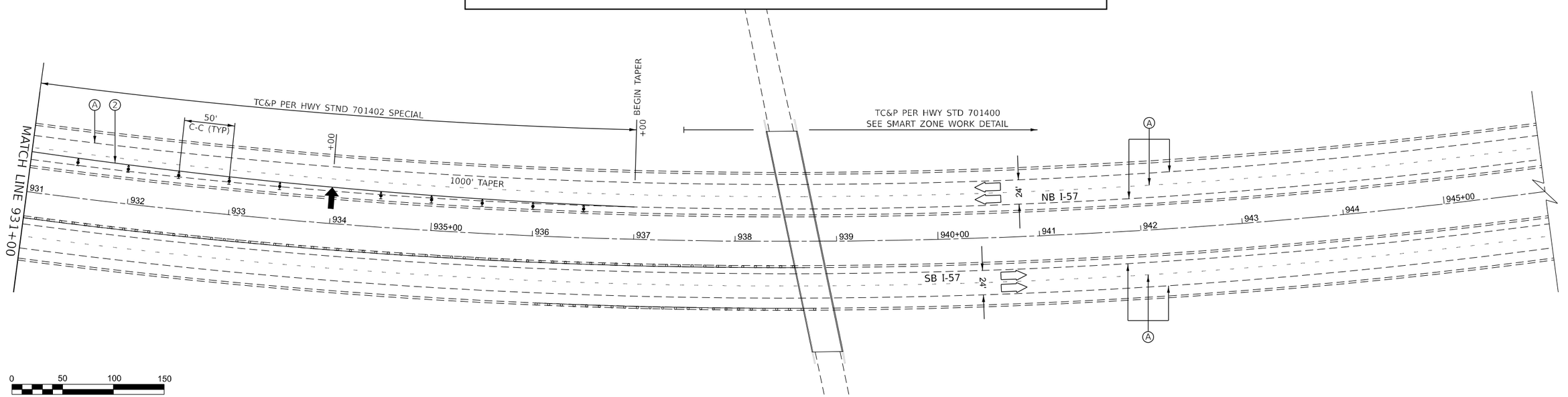


MODEL: Stage 3 Sheets
FILE NAME: pw://ildot-pw.bentley.com:PWIDOT/Documents/IDOT Offices/District 3/ORD Projects/D396H62/CADData/CADsheets/66H62-Plan-Stage 3

| | | | |
|---|---|---|---|
| USER NAME = Cody.M.Johnson | DESIGNED - | REVISED - | |
| | DRAWN - | REVISED - | |
| PLOT SCALE = 100.000 ' / in. | CHECKED - | REVISED - | |
| PLOT DATE = 12/15/2023 | DATE - | REVISED - | |

**STATE OF ILLINOIS**
**DEPARTMENT OF TRANSPORTATION**

**STAGE 3 TRAFFIC CONTROL**

SCALE: | SHEET 17 OF 17 SHEETS | STA. | TO STA.

| F.A.I RTE. | SECTION | COUNTY | TOTAL SHEETS | SHEET NO. |
|---|---|---|---|---|
| 57 | (38-6,38-5)RS,BRR,CLV | IROQUOIS | 213 | 172 |
| | | CONTRACT NO. 66H62 | | |
| | | ILLINOIS | FED. AID PROJECT | |

Long Section Number

## LEGEND

- DIRECTION INDICATOR BARRICADE WITH STEADY BURN MONODIRECTIONAL LIGHT
- DRUMS WITH MONO-DIRECTIONAL STEADY BURNING LIGHTS
- DIRECTION OF TRAFFIC
- IMPACT ATTENUATOR, TEMPORARY (NON-REDIRECTIVE TL 3)
- TEMPORARY CONCRETE BARRIER
- ARROW BOARD
- CLASS A PATCHING UNDER STRUCTURES
- WORK ZONE
- (A) EXISTING PAVEMENT MARKING
- (1) TEMPORARY PAVEMENT MARKING MODIFIED URETHANE - WHITE
- (2) TEMPORARY PAVEMENT MARKING MODIFIED URETHANE - YELLOW
- (3) TEMPORARY PAVEMENT MARKING TYPE III TAPE - WHITE
- (4) TEMPORARY PAVEMENT MARKING TYPE III TAPE - YELLOW
- (5) SHORT TERM PAVEMENT MARKING

NOTES:
ALTERATIONS TO THE TRAFFIC CONTROL PLAN SHALL BE APPROVED BY THE ENGINEER.
USE TRAFFIC CONTROL STANDARD 701400 & 701406 FOR STAGE 4 WORKZONE. USE 701411 & 701456 FOR ALL RAMPS.
(NOT ALL TRAFFIC CONTROL DEVICES & SIGNING SHOWN) ADJUST RAMP OPENINGS IF REQUIRED.

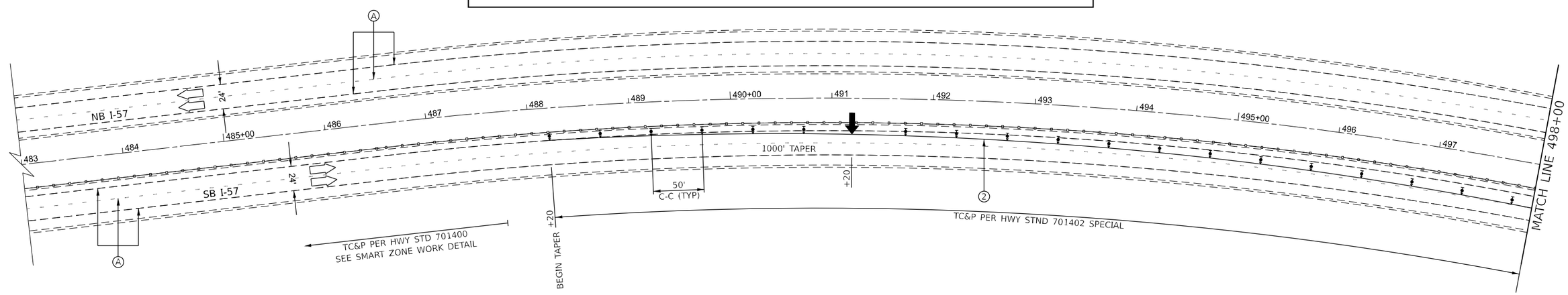


0 50 100 150
SCALE IN FEET

MODEL: Stage 4 Plan Sheets
FILE NAME: pw://ildot-pw.bentley.com:PWIDOT/Documents/IDOT Offices/District 3/ORD Projects/D396H62/CADData/CADsheets/66H62-Plan-Stage 4

| | | | |
|---|---|---|---|
| USER NAME = Cody.M.Johnson | DESIGNED - | REVISED - | |
| | DRAWN - | REVISED - | |
| PLOT SCALE = 100.000 ' / in. | CHECKED - | REVISED - | |
| PLOT DATE = 12/15/2023 | DATE - | REVISED - | |

**STATE OF ILLINOIS**
**DEPARTMENT OF TRANSPORTATION**

**STAGE 4 TRAFFIC CONTROL**

SCALE: | SHEET 1 OF 17 SHEETS | STA. | TO STA.

| F.A.I RTE. | SECTION | COUNTY | TOTAL SHEETS | SHEET NO. |
|---|---|---|---|---|
| 57 | (38-6,38-5)RS,BRR,CLV | IROQUOIS | 213 | 173 |
| | | CONTRACT NO. 66H62 | | |
| | ILLINOIS | FED. AID PROJECT | | |

Long Section Number

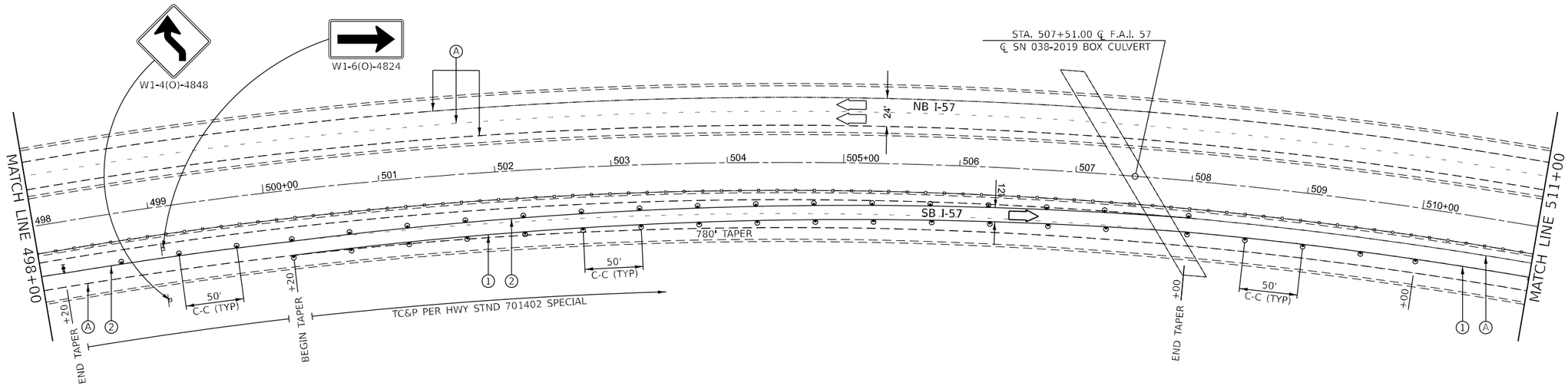


0 50 100 150
SCALE IN FEET

## LEGEND

- DIRECTION INDICATOR BARRICADE WITH STEADY BURN MONODIRECTIONAL LIGHT
- DRUMS WITH MONO-DIRECTIONAL STEADY BURNING LIGHTS
- DIRECTION OF TRAFFIC
- IMPACT ATTENUATOR, TEMPORARY (NON-REDIRECTIVE TL 3)
- TEMPORARY CONCRETE BARRIER
- ARROW BOARD
- CLASS A PATCHING UNDER STRUCTURES
- WORK ZONE
- (A) EXISTING PAVEMENT MARKING
- (1) TEMPORARY PAVEMENT MARKING MODIFIED URETHANE - WHITE
- (2) TEMPORARY PAVEMENT MARKING MODIFIED URETHANE - YELLOW
- (3) TEMPORARY PAVEMENT MARKING TYPE III TAPE - WHITE
- (4) TEMPORARY PAVEMENT MARKING TYPE III TAPE - YELLOW
- (5) SHORT TERM PAVEMENT MARKING

NOTES:
ALTERATIONS TO THE TRAFFIC CONTROL PLAN SHALL BE APPROVED BY THE ENGINEER.
USE TRAFFIC CONTROL STANDARD 701400 & 701406 FOR STAGE 4 WORKZONE. USE 701411 & 701456 FOR ALL RAMPS.
(NOT ALL TRAFFIC CONTROL DEVICES & SIGNING SHOWN) ADJUST RAMP OPENINGS IF REQUIRED.

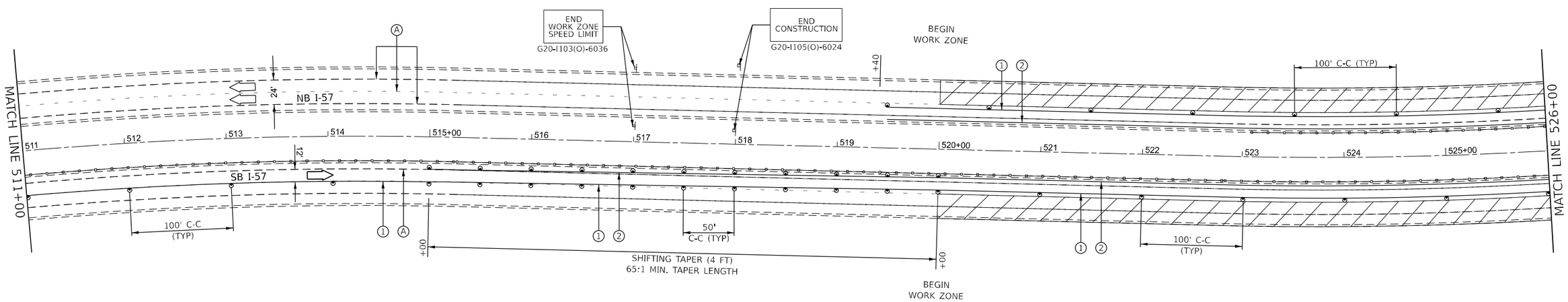


0 50 100 150
SCALE IN FEET

MODEL: Stage 4 Plan Sheets
FILE NAME: pw:\\ildot-pw.bentley.com:PWIDOT\Documents\IDOT Offices\District 3\ORD Projects\D38H62\CADData\CADsheets\66H62-Plan-Stage 4

| | | | |
|---|---|---|---|
| USER NAME = Cody.M.Johnson | DESIGNED - | REVISED - | |
| | DRAWN - | REVISED - | |
| PLOT SCALE = 100.000 ' / in. | CHECKED - | REVISED - | |
| PLOT DATE = 12/15/2023 | DATE - | REVISED - | |

**STATE OF ILLINOIS**
**DEPARTMENT OF TRANSPORTATION**

**STAGE 4 TRAFFIC CONTROL**

SCALE: | SHEET 2 OF 17 SHEETS | STA. | TO STA.

| F.A.I RTE. | SECTION | COUNTY | TOTAL SHEETS | SHEET NO. |
|---|---|---|---|---|
| 57 | (38-6,38-5)RS,BRR,CLV | IROQUOIS | 213 | 174 |
| | | CONTRACT NO. 66H62 | | |
| | ILLINOIS | FED. AID PROJECT | | |

Long Section Number

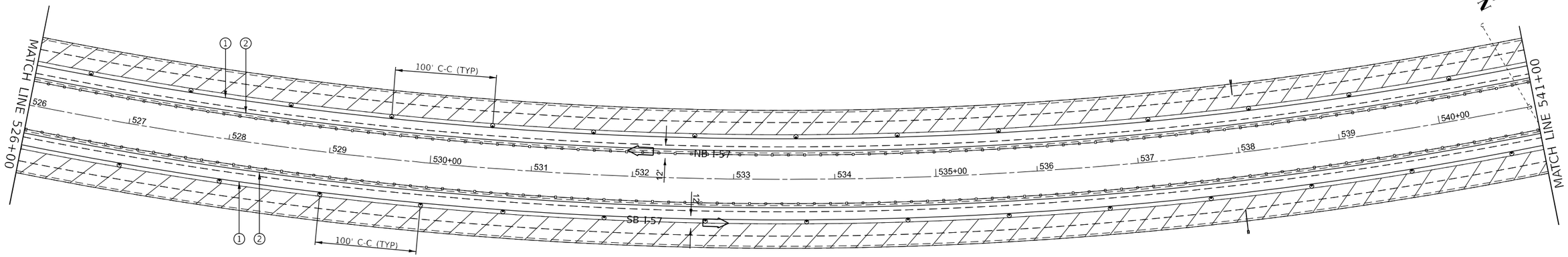


0 50 100 150
SCALE IN FEET

## LEGEND

- DIRECTION INDICATOR BARRICADE WITH STEADY BURN MONODIRECTIONAL LIGHT
- DRUMS WITH MONO-DIRECTIONAL STEADY BURNING LIGHTS
- DIRECTION OF TRAFFIC
- IMPACT ATTENUATOR, TEMPORARY (NON-REDIRECTIVE TL 3)
- TEMPORARY CONCRETE BARRIER
- ARROW BOARD
- CLASS A PATCHING UNDER STRUCTURES
- WORK ZONE
- (A) EXISTING PAVEMENT MARKING
- (1) TEMPORARY PAVEMENT MARKING MODIFIED URETHANE - WHITE
- (2) TEMPORARY PAVEMENT MARKING MODIFIED URETHANE - YELLOW
- (3) TEMPORARY PAVEMENT MARKING TYPE III TAPE - WHITE
- (4) TEMPORARY PAVEMENT MARKING TYPE III TAPE - YELLOW
- (5) SHORT TERM PAVEMENT MARKING

NOTES:
ALTERATIONS TO THE TRAFFIC CONTROL PLAN SHALL BE APPROVED BY THE ENGINEER.
USE TRAFFIC CONTROL STANDARD 701400 & 701406 FOR STAGE 4 WORKZONE. USE 701411 & 701456 FOR ALL RAMPS.
(NOT ALL TRAFFIC CONTROL DEVICES & SIGNING SHOWN) ADJUST RAMP OPENINGS IF REQUIRED.

STA 30+00.00 ℄ F.A.S. RTE 338 (E 1900 N RD)
STA. 541+66.36 ℄ F.A.I. 57
℄ SN 038-0086 OVERHEAD STRUCTURE

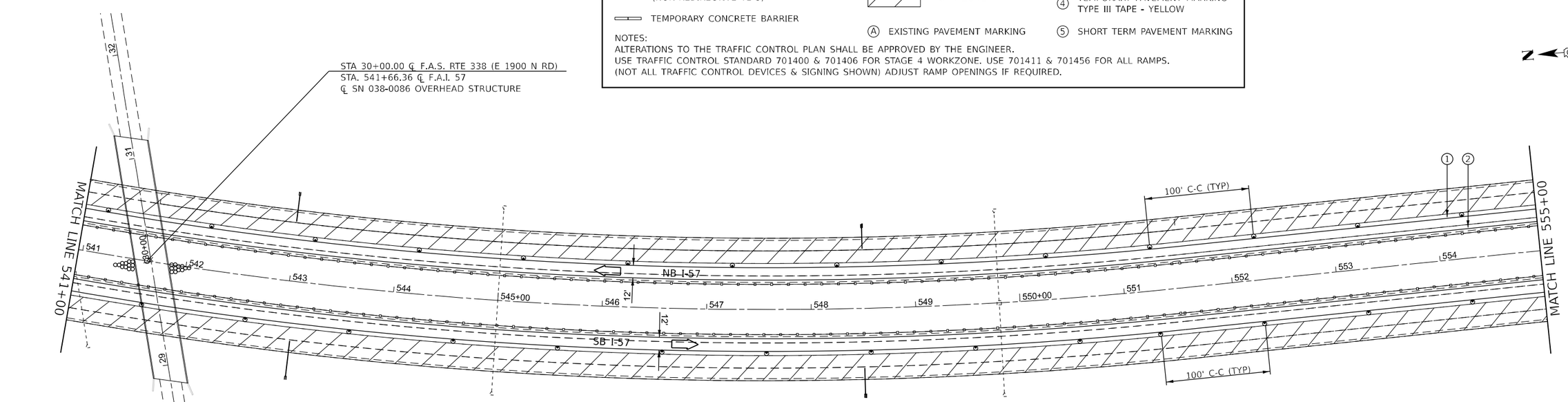


0 50 100 150
SCALE IN FEET

MODEL: Stage 4 Plan Sheets
FILE NAME: pw://ildot-pw.bentley.com:PWIDOT/Documents/IDOT Offices/District 3/ORD Projects/D398H62/CADData/CADsheets/66H62-Plan-Stage 4

| | | | |
|---|---|---|---|
| USER NAME = Cody.M.Johnson | DESIGNED - | REVISED - | |
| | DRAWN - | REVISED - | |
| PLOT SCALE = 100.000 ' / in. | CHECKED - | REVISED - | |
| PLOT DATE = 12/15/2023 | DATE - | REVISED - | |

**STATE OF ILLINOIS**
**DEPARTMENT OF TRANSPORTATION**

**STAGE 4 TRAFFIC CONTROL**

SCALE: | SHEET 3 OF 17 SHEETS | STA. | TO STA.

| F.A.I RTE. | SECTION | COUNTY | TOTAL SHEETS | SHEET NO. |
|---|---|---|---|---|
| 57 | (38-6,38-5)RS,BRR,CLV | IROQUOIS | 213 | 175 |
| | | CONTRACT NO. 66H62 | | |
| | ILLINOIS | FED. AID PROJECT | | |

Long Section Number

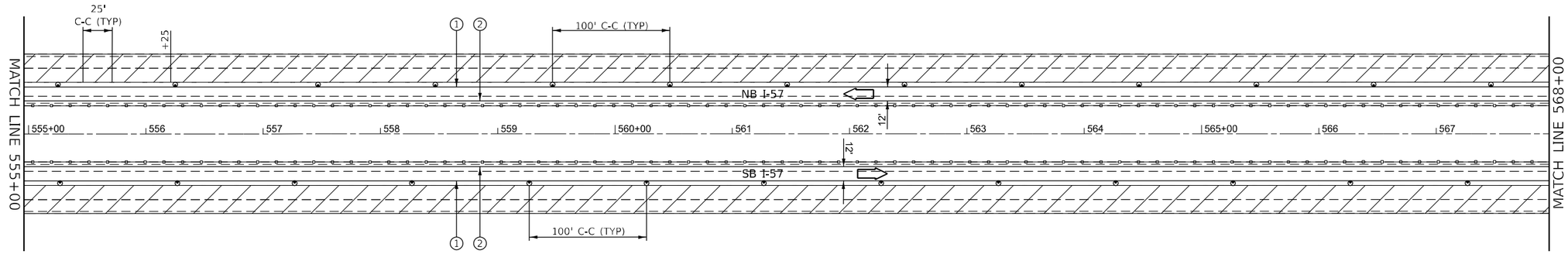


0 50 100 150
SCALE IN FEET

## LEGEND

- DIRECTION INDICATOR BARRICADE WITH STEADY BURN MONODIRECTIONAL LIGHT
- DRUMS WITH MONO-DIRECTIONAL STEADY BURNING LIGHTS
- DIRECTION OF TRAFFIC
- IMPACT ATTENUATOR, TEMPORARY (NON-REDIRECTIVE TL 3)
- TEMPORARY CONCRETE BARRIER
- ARROW BOARD
- CLASS A PATCHING UNDER STRUCTURES
- WORK ZONE
- (A) EXISTING PAVEMENT MARKING
- (1) TEMPORARY PAVEMENT MARKING MODIFIED URETHANE - WHITE
- (2) TEMPORARY PAVEMENT MARKING MODIFIED URETHANE - YELLOW
- (3) TEMPORARY PAVEMENT MARKING TYPE III TAPE - WHITE
- (4) TEMPORARY PAVEMENT MARKING TYPE III TAPE - YELLOW
- (5) SHORT TERM PAVEMENT MARKING

NOTES:
ALTERATIONS TO THE TRAFFIC CONTROL PLAN SHALL BE APPROVED BY THE ENGINEER.
USE TRAFFIC CONTROL STANDARD 701400 & 701406 FOR STAGE 4 WORKZONE. USE 701411 & 701456 FOR ALL RAMPS.
(NOT ALL TRAFFIC CONTROL DEVICES & SIGNING SHOWN) ADJUST RAMP OPENINGS IF REQUIRED.

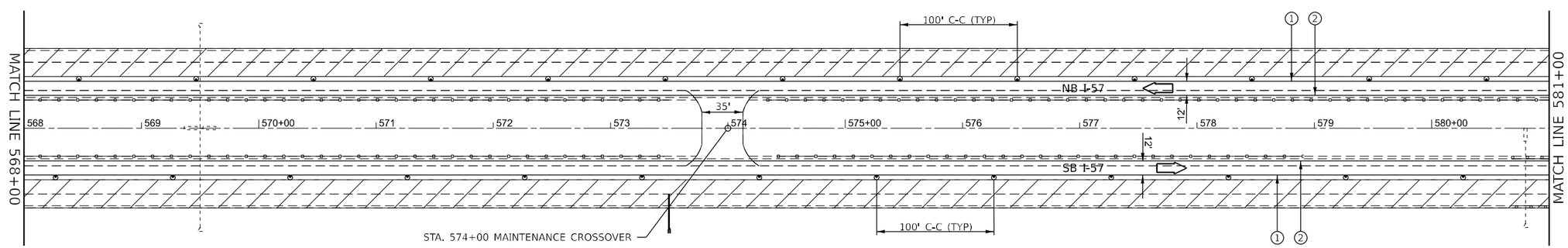


0 50 100 150
SCALE IN FEET

MODEL: Stage 4 Plan Sheets
FILE NAME: pw://ildot-pw.bentley.com:PWIDOT/Documents/IDOT Offices/District 3/ORD Projects/D398H62/CADData/CADsheets/66H62-Plan-Stage 4

| | | | |
|---|---|---|---|
| USER NAME = Cody.M.Johnson | DESIGNED - | REVISED - | |
| | DRAWN - | REVISED - | |
| PLOT SCALE = 100.000 ' / in. | CHECKED - | REVISED - | |
| PLOT DATE = 12/15/2023 | DATE - | REVISED - | |

**STATE OF ILLINOIS**
**DEPARTMENT OF TRANSPORTATION**

**STAGE 4 TRAFFIC CONTROL**

SCALE: | SHEET 4 OF 17 SHEETS | STA. | TO STA.

| F.A.I RTE. | SECTION | COUNTY | TOTAL SHEETS | SHEET NO. |
|---|---|---|---|---|
| 57 | (38-6,38-5)RS,BRR,CLV | IROQUOIS | 213 | 176 |
| | | CONTRACT NO. 66H62 | | |
| | ILLINOIS | FED. AID PROJECT | | |

Long Section Number

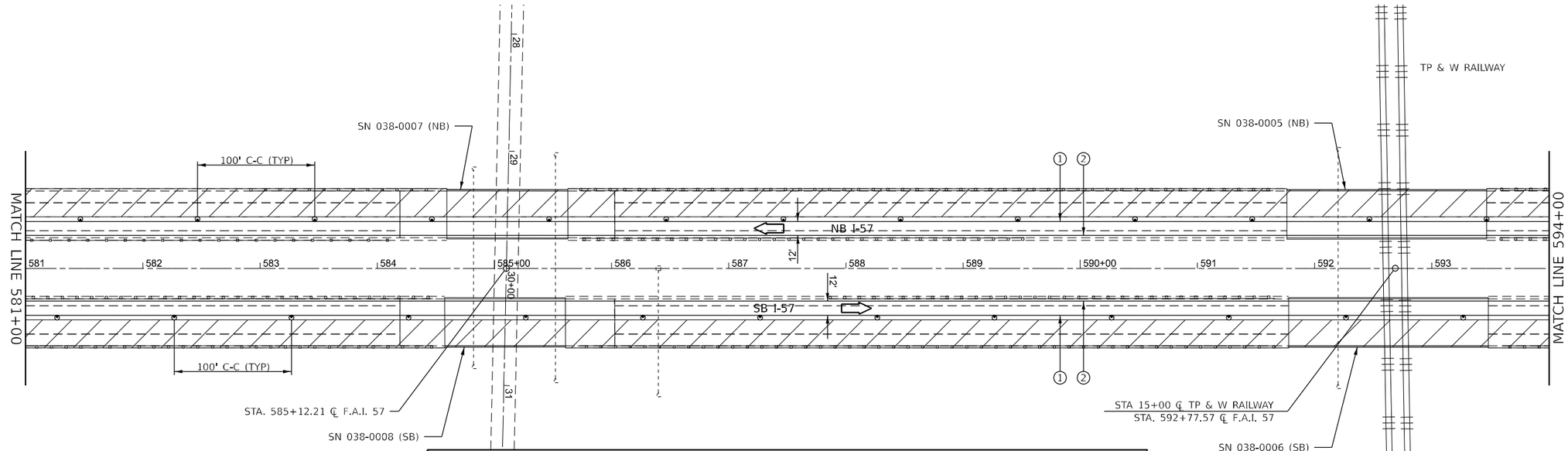


0 50 100 150
SCALE IN FEET

## LEGEND

- DIRECTION INDICATOR BARRICADE WITH STEADY BURN MONODIRECTIONAL LIGHT
- DRUMS WITH MONO-DIRECTIONAL STEADY BURNING LIGHTS
- DIRECTION OF TRAFFIC
- IMPACT ATTENUATOR, TEMPORARY (NON-REDIRECTIVE TL 3)
- TEMPORARY CONCRETE BARRIER
- ARROW BOARD
- CLASS A PATCHING UNDER STRUCTURES
- WORK ZONE
- (A) EXISTING PAVEMENT MARKING
- (1) TEMPORARY PAVEMENT MARKING MODIFIED URETHANE - WHITE
- (2) TEMPORARY PAVEMENT MARKING MODIFIED URETHANE - YELLOW
- (3) TEMPORARY PAVEMENT MARKING TYPE III TAPE - WHITE
- (4) TEMPORARY PAVEMENT MARKING TYPE III TAPE - YELLOW
- (5) SHORT TERM PAVEMENT MARKING

NOTES:
ALTERATIONS TO THE TRAFFIC CONTROL PLAN SHALL BE APPROVED BY THE ENGINEER.
USE TRAFFIC CONTROL STANDARD 701400 & 701406 FOR STAGE 4 WORKZONE. USE 701411 & 701456 FOR ALL RAMPS.
(NOT ALL TRAFFIC CONTROL DEVICES & SIGNING SHOWN) ADJUST RAMP OPENINGS IF REQUIRED.

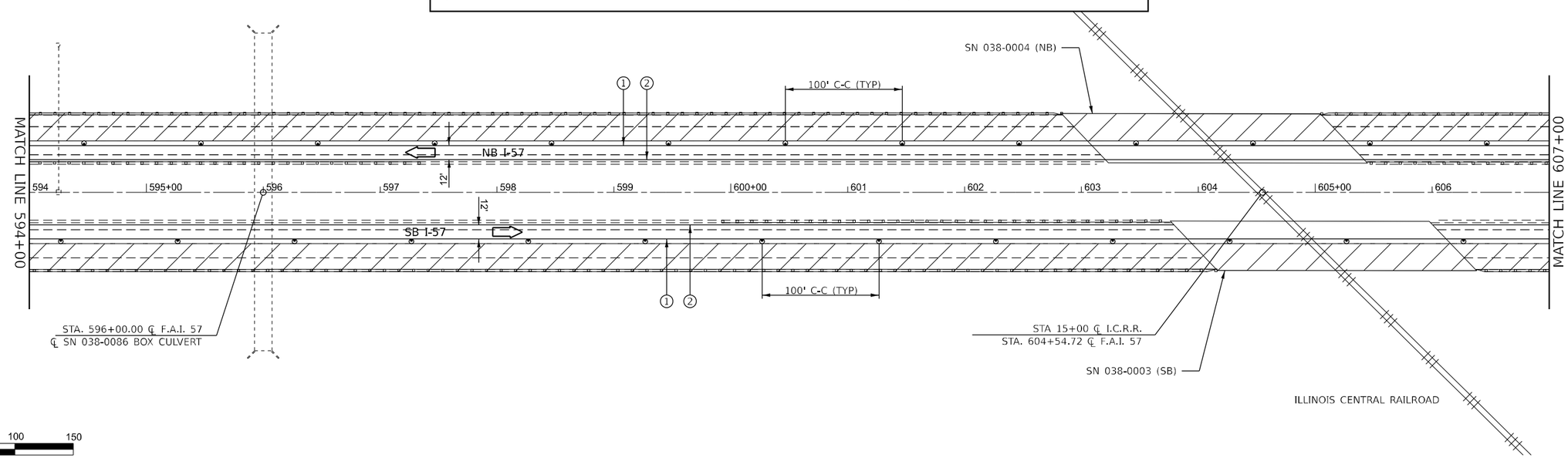


0 50 100 150
SCALE IN FEET

MODEL: Stage 4 Plan Sheets
FILE NAME: pw://ildot-pw.bentley.com:PWIDOT/Documents/IDOT Offices/District 3/ORD Projects/D398H62/CADData/CADsheets/66H62-Plan-Stage 4

| | | | |
|---|---|---|---|
| USER NAME = Cody.M.Johnson | DESIGNED - | REVISED - | |
| | DRAWN - | REVISED - | |
| PLOT SCALE = 100.000 ' / in. | CHECKED - | REVISED - | |
| PLOT DATE = 12/15/2023 | DATE - | REVISED - | |

**STATE OF ILLINOIS**
**DEPARTMENT OF TRANSPORTATION**

**STAGE 4 TRAFFIC CONTROL**

SCALE: | SHEET 5 OF 17 SHEETS | STA. | TO STA.

| F.A.I RTE. | SECTION | COUNTY | TOTAL SHEETS | SHEET NO. |
|---|---|---|---|---|
| 57 | (38-6,38-5)RS,BRR,CLV | IROQUOIS | 213 | 177 |
| | | CONTRACT NO. 66H62 | | |
| | ILLINOIS | FED. AID PROJECT | | |

Long Section Number

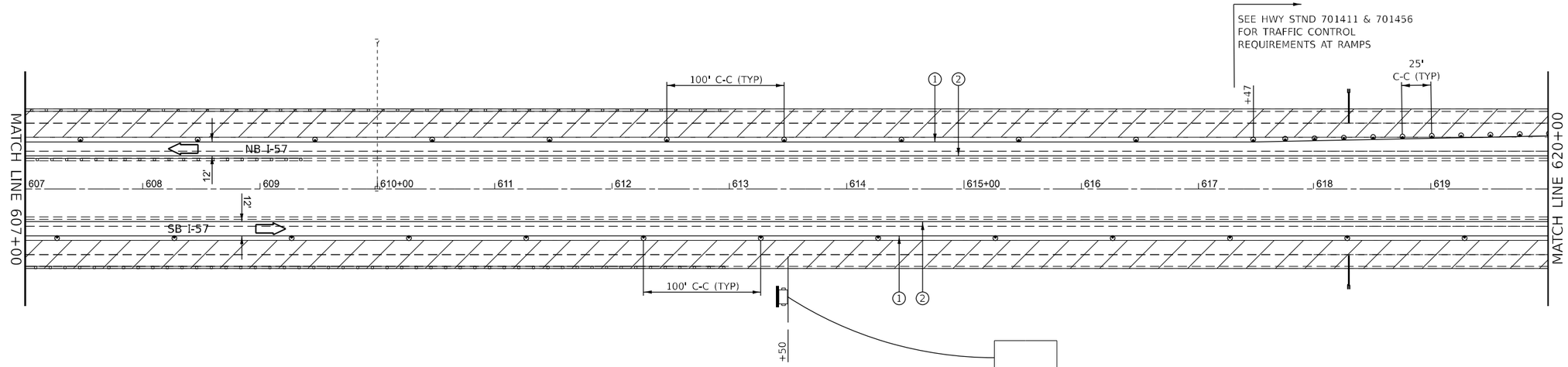


0 50 100 150
SCALE IN FEET

## LEGEND

- DIRECTION INDICATOR BARRICADE WITH STEADY BURN MONODIRECTIONAL LIGHT
- DRUMS WITH MONO-DIRECTIONAL STEADY BURNING LIGHTS
- DIRECTION OF TRAFFIC
- IMPACT ATTENUATOR, TEMPORARY (NON-REDIRECTIVE TL 3)
- TEMPORARY CONCRETE BARRIER
- ARROW BOARD
- CLASS A PATCHING UNDER STRUCTURES
- WORK ZONE
- (A) EXISTING PAVEMENT MARKING
- (1) TEMPORARY PAVEMENT MARKING MODIFIED URETHANE - WHITE
- (2) TEMPORARY PAVEMENT MARKING MODIFIED URETHANE - YELLOW
- (3) TEMPORARY PAVEMENT MARKING TYPE III TAPE - WHITE
- (4) TEMPORARY PAVEMENT MARKING TYPE III TAPE - YELLOW
- (5) SHORT TERM PAVEMENT MARKING

NOTES:
ALTERATIONS TO THE TRAFFIC CONTROL PLAN SHALL BE APPROVED BY THE ENGINEER.
USE TRAFFIC CONTROL STANDARD 701400 & 701406 FOR STAGE 4 WORKZONE. USE 701411 & 701456 FOR ALL RAMPS.
(NOT ALL TRAFFIC CONTROL DEVICES & SIGNING SHOWN) ADJUST RAMP OPENINGS IF REQUIRED.

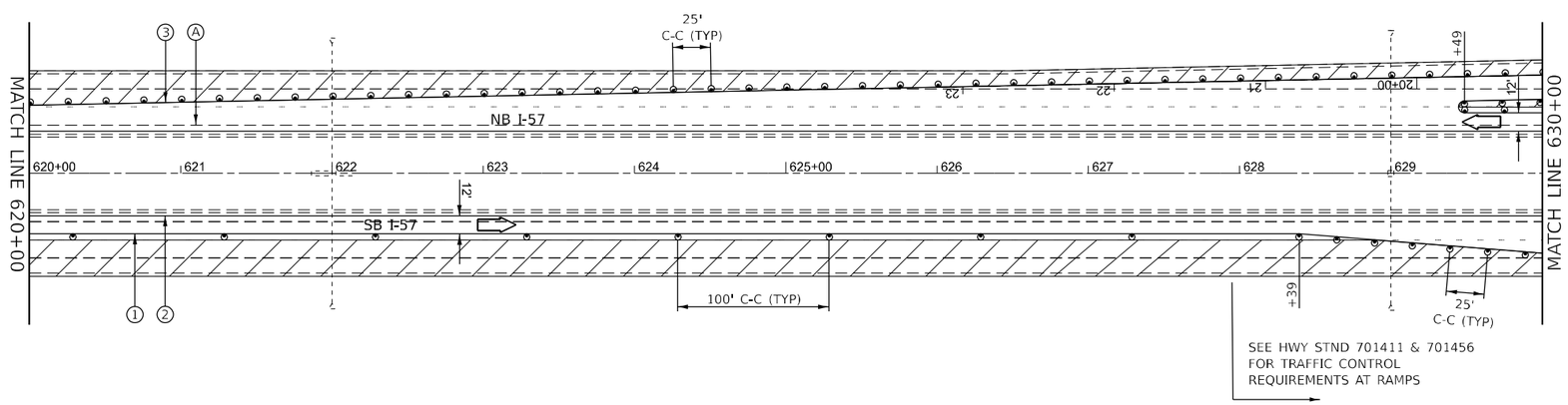


0 50 100 150
SCALE IN FEET

MODEL: Stage 4 Plan Sheets
FILE NAME: pw://ildot-pw.bentley.com:PWIDOT/Documents/IDOT Offices/District 3/ORD Projects/D398H62/CADData/CADsheets/66H62-Plan-Stage 4

| | | | |
|---|---|---|---|
| USER NAME = Cody.M.Johnson | DESIGNED - | REVISED - | |
| | DRAWN - | REVISED - | |
| PLOT SCALE = 100.000 ' / in. | CHECKED - | REVISED - | |
| PLOT DATE = 12/15/2023 | DATE - | REVISED - | |

**STATE OF ILLINOIS**
**DEPARTMENT OF TRANSPORTATION**

**STAGE 4 TRAFFIC CONTROL**

SCALE: | SHEET 6 OF 17 SHEETS | STA. | TO STA.

| F.A.I RTE. | SECTION | COUNTY | TOTAL SHEETS | SHEET NO. |
|---|---|---|---|---|
| 57 | (38-6,38-5)RS,BRR,CLV | IROQUOIS | 213 | 178 |
| | | CONTRACT NO. 66H62 | | |
| | ILLINOIS | FED. AID PROJECT | | |

Long Section Number

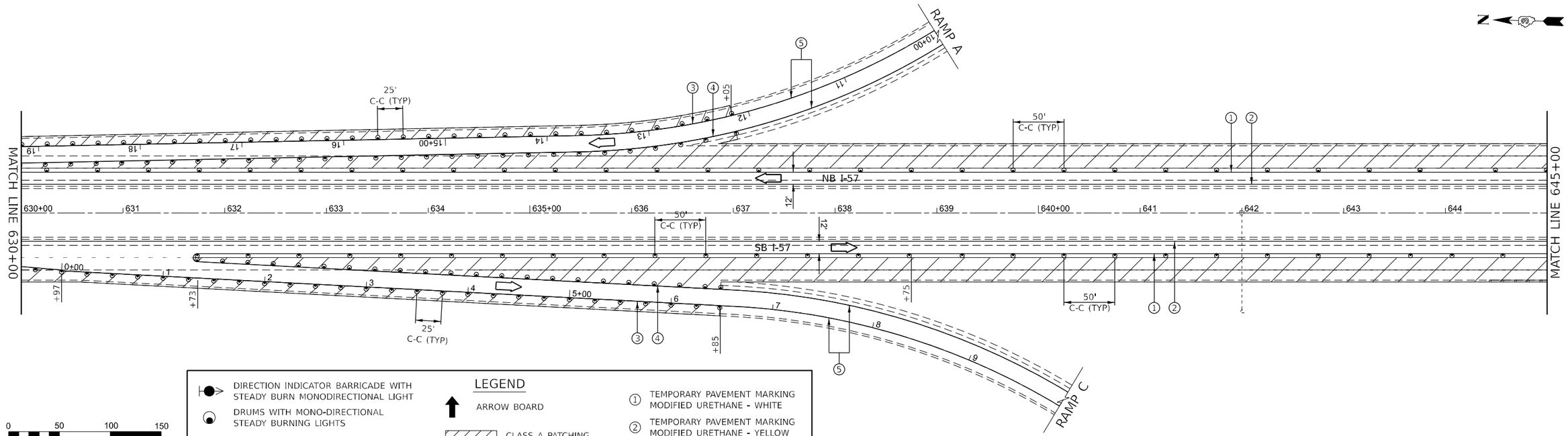


0 50 100 150
SCALE IN FEET

## LEGEND

- DIRECTION INDICATOR BARRICADE WITH STEADY BURN MONODIRECTIONAL LIGHT
- DRUMS WITH MONO-DIRECTIONAL STEADY BURNING LIGHTS
- DIRECTION OF TRAFFIC
- IMPACT ATTENUATOR, TEMPORARY (NON-REDIRECTIVE TL 3)
- TEMPORARY CONCRETE BARRIER
- ARROW BOARD
- CLASS A PATCHING UNDER STRUCTURES
- WORK ZONE
- (A) EXISTING PAVEMENT MARKING
- (1) TEMPORARY PAVEMENT MARKING MODIFIED URETHANE - WHITE
- (2) TEMPORARY PAVEMENT MARKING MODIFIED URETHANE - YELLOW
- (3) TEMPORARY PAVEMENT MARKING TYPE III TAPE - WHITE
- (4) TEMPORARY PAVEMENT MARKING TYPE III TAPE - YELLOW
- (5) SHORT TERM PAVEMENT MARKING

NOTES:
ALTERATIONS TO THE TRAFFIC CONTROL PLAN SHALL BE APPROVED BY THE ENGINEER.
USE TRAFFIC CONTROL STANDARD 701400 & 701406 FOR STAGE 4 WORKZONE. USE 701411 & 701456 FOR ALL RAMPS.
(NOT ALL TRAFFIC CONTROL DEVICES & SIGNING SHOWN) ADJUST RAMP OPENINGS IF REQUIRED.

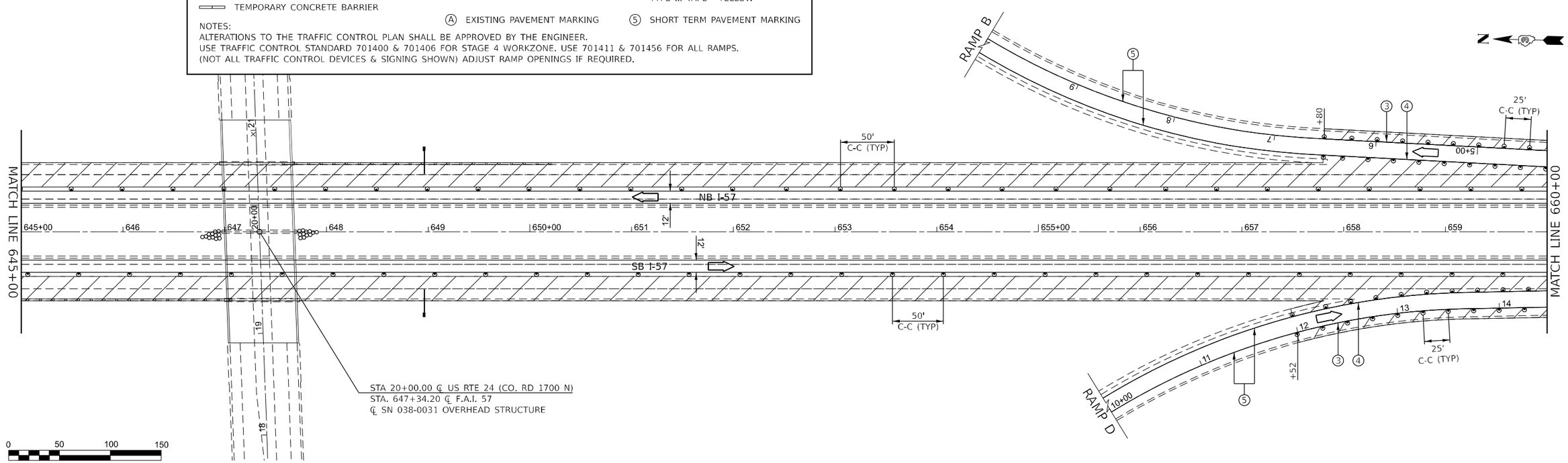


0 50 100 150
SCALE IN FEET

MODEL: Stage 4 Plan Sheets
FILE NAME: pw://ildot-pw.bentley.com:PWIDOT/Documents/IDOT Offices/District 3/ORD Projects/D398H62/CADData/CADsheets/66H62-Plan-Stage 4

| | | | |
|---|---|---|---|
| USER NAME = Cody.M.Johnson | DESIGNED - | REVISED - | |
| | DRAWN - | REVISED - | |
| PLOT SCALE = 100.000 ' / in. | CHECKED - | REVISED - | |
| PLOT DATE = 12/15/2023 | DATE - | REVISED - | |

**STATE OF ILLINOIS**
**DEPARTMENT OF TRANSPORTATION**

**STAGE 4 TRAFFIC CONTROL**

SCALE: | SHEET 7 OF 17 SHEETS | STA. | TO STA.

| F.A.I RTE. | SECTION | COUNTY | TOTAL SHEETS | SHEET NO. |
|---|---|---|---|---|
| 57 | (38-6,38-5)RS,BRR,CLV | IROQUOIS | 213 | 179 |
| | | CONTRACT NO. 66H62 | | |
| | ILLINOIS | FED. AID PROJECT | | |

Long Section Number

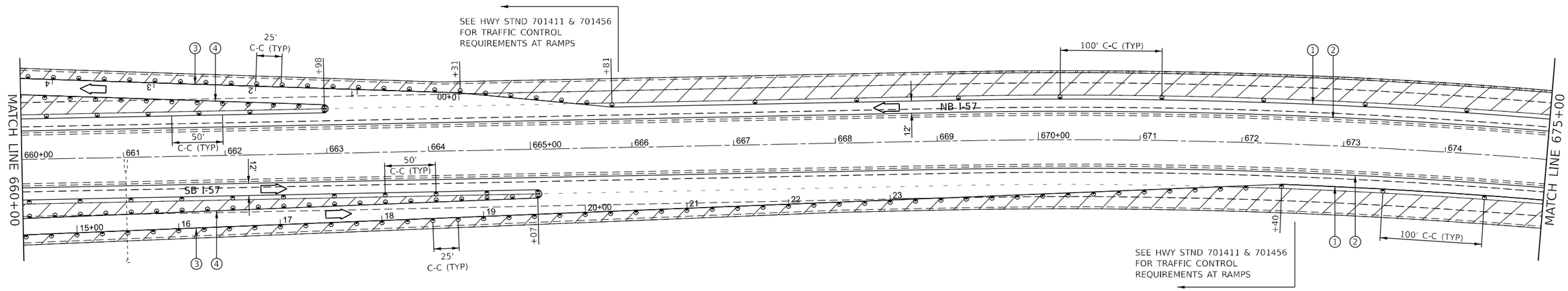


0 50 100 150
SCALE IN FEET

## LEGEND

- DIRECTION INDICATOR BARRICADE WITH STEADY BURN MONODIRECTIONAL LIGHT
- DRUMS WITH MONO-DIRECTIONAL STEADY BURNING LIGHTS
- DIRECTION OF TRAFFIC
- IMPACT ATTENUATOR, TEMPORARY (NON-REDIRECTIVE TL 3)
- TEMPORARY CONCRETE BARRIER
- ARROW BOARD
- CLASS A PATCHING UNDER STRUCTURES
- WORK ZONE
- (A) EXISTING PAVEMENT MARKING
- (1) TEMPORARY PAVEMENT MARKING MODIFIED URETHANE - WHITE
- (2) TEMPORARY PAVEMENT MARKING MODIFIED URETHANE - YELLOW
- (3) TEMPORARY PAVEMENT MARKING TYPE III TAPE - WHITE
- (4) TEMPORARY PAVEMENT MARKING TYPE III TAPE - YELLOW
- (5) SHORT TERM PAVEMENT MARKING

NOTES:
ALTERATIONS TO THE TRAFFIC CONTROL PLAN SHALL BE APPROVED BY THE ENGINEER.
USE TRAFFIC CONTROL STANDARD 701400 & 701406 FOR STAGE 4 WORKZONE. USE 701411 & 701456 FOR ALL RAMPS.
(NOT ALL TRAFFIC CONTROL DEVICES & SIGNING SHOWN) ADJUST RAMP OPENINGS IF REQUIRED.

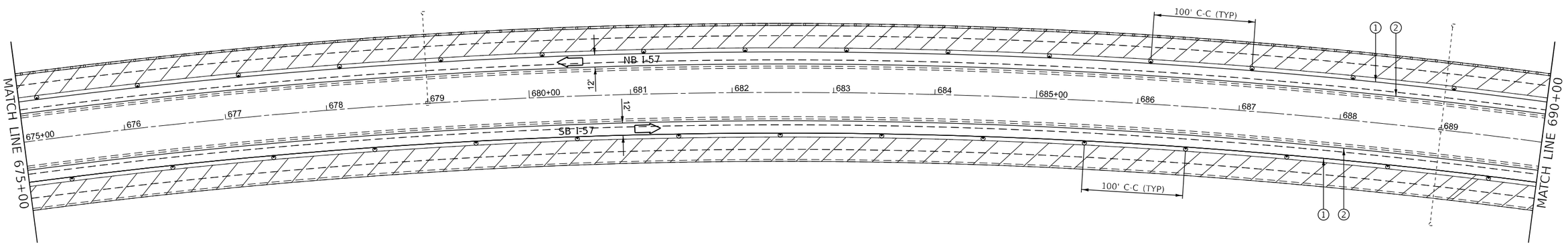


0 50 100 150
SCALE IN FEET

MODEL: Stage 4 Plan Sheets
FILE NAME: pw:\\ildot-pw.bentley.com:PWIDOT\Documents\IDOT Offices\District 3\ORD Projects\D398H62\CADData\CADsheets\66H62-Plan-Stage 4

| | | | |
|---|---|---|---|
| USER NAME = Cody.M.Johnson | DESIGNED - | REVISED - | |
| | DRAWN - | REVISED - | |
| PLOT SCALE = 100.000 ' / in. | CHECKED - | REVISED - | |
| PLOT DATE = 12/15/2023 | DATE - | REVISED - | |

**STATE OF ILLINOIS**
**DEPARTMENT OF TRANSPORTATION**

**STAGE 4 TRAFFIC CONTROL**

SCALE: | SHEET 8 OF 17 SHEETS | STA. | TO STA.

| F.A.I RTE. | SECTION | COUNTY | TOTAL SHEETS | SHEET NO. |
|---|---|---|---|---|
| 57 | (38-6,38-5)RS,BRR,CLV | IROQUOIS | 213 | 180 |
| | | CONTRACT NO. 66H62 | | |
| | ILLINOIS | FED. AID PROJECT | | |

Long Section Number

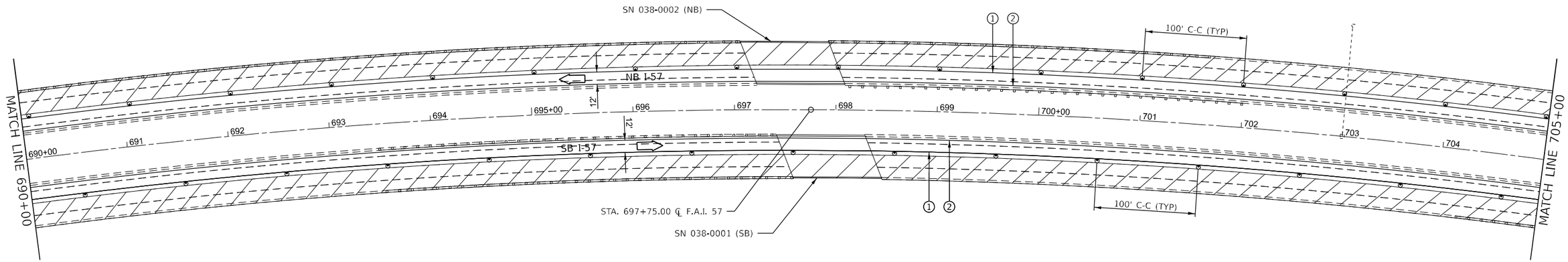


0 50 100 150
SCALE IN FEET

## LEGEND

- DIRECTION INDICATOR BARRICADE WITH STEADY BURN MONODIRECTIONAL LIGHT
- DRUMS WITH MONO-DIRECTIONAL STEADY BURNING LIGHTS
- DIRECTION OF TRAFFIC
- IMPACT ATTENUATOR, TEMPORARY (NON-REDIRECTIVE TL 3)
- TEMPORARY CONCRETE BARRIER
- ARROW BOARD
- CLASS A PATCHING UNDER STRUCTURES
- WORK ZONE
- (A) EXISTING PAVEMENT MARKING
- (1) TEMPORARY PAVEMENT MARKING MODIFIED URETHANE - WHITE
- (2) TEMPORARY PAVEMENT MARKING MODIFIED URETHANE - YELLOW
- (3) TEMPORARY PAVEMENT MARKING TYPE III TAPE - WHITE
- (4) TEMPORARY PAVEMENT MARKING TYPE III TAPE - YELLOW
- (5) SHORT TERM PAVEMENT MARKING

NOTES:
ALTERATIONS TO THE TRAFFIC CONTROL PLAN SHALL BE APPROVED BY THE ENGINEER.
USE TRAFFIC CONTROL STANDARD 701400 & 701406 FOR STAGE 4 WORKZONE. USE 701411 & 701456 FOR ALL RAMPS.
(NOT ALL TRAFFIC CONTROL DEVICES & SIGNING SHOWN) ADJUST RAMP OPENINGS IF REQUIRED.

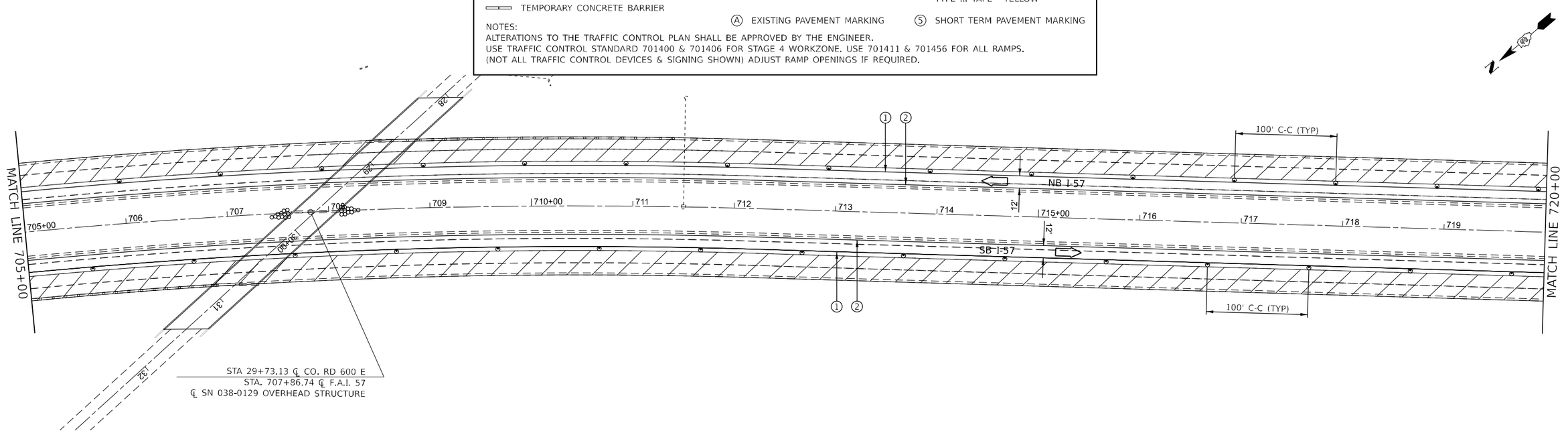


0 50 100 150
SCALE IN FEET

MODEL: Stage 4 Plan Sheets
FILE NAME: pw:\\ildot-pw.bentley.com:PWIDOT\Documents\IDOT Offices\District 3\ORD Projects\D398H62\CADData\CADsheets\66H62-PlanSheets\Stage 4

| | | | |
|---|---|---|---|
| USER NAME = Cody.M.Johnson | DESIGNED - | REVISED - | |
| | DRAWN - | REVISED - | |
| PLOT SCALE = 100.000 ' / in. | CHECKED - | REVISED - | |
| PLOT DATE = 12/15/2023 | DATE - | REVISED - | |

**STATE OF ILLINOIS**
**DEPARTMENT OF TRANSPORTATION**

**STAGE 4 TRAFFIC CONTROL**

SCALE: | SHEET 9 OF 17 SHEETS | STA. | TO STA.

| F.A.I RTE. | SECTION | COUNTY | TOTAL SHEETS | SHEET NO. |
|---|---|---|---|---|
| 57 | (38-6,38-5)RS,BRR,CLV | IROQUOIS | 213 | 181 |

CONTRACT NO. 66H62

ILLINOIS | FED. AID PROJECT

Long Section Number

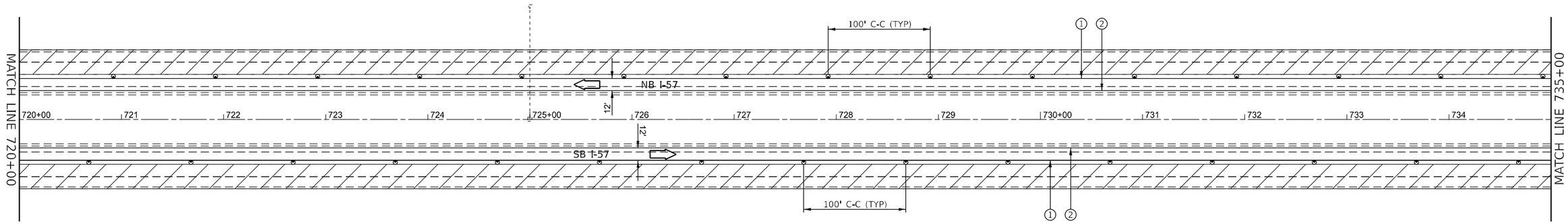


0 50 100 150
SCALE IN FEET

## LEGEND

- DIRECTION INDICATOR BARRICADE WITH STEADY BURN MONODIRECTIONAL LIGHT
- DRUMS WITH MONO-DIRECTIONAL STEADY BURNING LIGHTS
- DIRECTION OF TRAFFIC
- IMPACT ATTENUATOR, TEMPORARY (NON-REDIRECTIVE TL 3)
- TEMPORARY CONCRETE BARRIER
- ARROW BOARD
- CLASS A PATCHING UNDER STRUCTURES
- WORK ZONE
- (A) EXISTING PAVEMENT MARKING
- (1) TEMPORARY PAVEMENT MARKING MODIFIED URETHANE - WHITE
- (2) TEMPORARY PAVEMENT MARKING MODIFIED URETHANE - YELLOW
- (3) TEMPORARY PAVEMENT MARKING TYPE III TAPE - WHITE
- (4) TEMPORARY PAVEMENT MARKING TYPE III TAPE - YELLOW
- (5) SHORT TERM PAVEMENT MARKING

NOTES:
ALTERATIONS TO THE TRAFFIC CONTROL PLAN SHALL BE APPROVED BY THE ENGINEER.
USE TRAFFIC CONTROL STANDARD 701400 & 701406 FOR STAGE 4 WORKZONE. USE 701411 & 701456 FOR ALL RAMPS.
(NOT ALL TRAFFIC CONTROL DEVICES & SIGNING SHOWN) ADJUST RAMP OPENINGS IF REQUIRED.

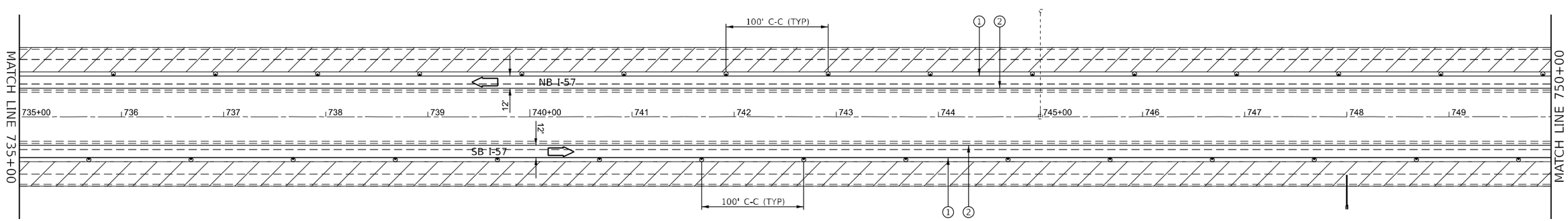


0 50 100 150
SCALE IN FEET

MODEL: Stage 4 Plan Sheets
FILE NAME: pw:\\ildot-pw.bentley.com:PWIDOT\Documents\IDOT Offices\District 3\ORD Projects\D398H62\CADData\CADsheets\66H62-Plan-Stage 4

| | | | |
|---|---|---|---|
| USER NAME = Cody.M.Johnson | DESIGNED - | REVISED - | |
| | DRAWN - | REVISED - | |
| PLOT SCALE = 100.000 ' / in. | CHECKED - | REVISED - | |
| PLOT DATE = 12/15/2023 | DATE - | REVISED - | |

**STATE OF ILLINOIS**
**DEPARTMENT OF TRANSPORTATION**

**STAGE 4 TRAFFIC CONTROL**

SCALE: | SHEET 10 OF 17 SHEETS | STA. | TO STA.

| F.A.I RTE. | SECTION | COUNTY | TOTAL SHEETS | SHEET NO. |
|---|---|---|---|---|
| 57 | (38-6,38-5)RS,BRR,CLV | IROQUOIS | 213 | 182 |
| | | CONTRACT NO. 66H62 | | |
| | ILLINOIS | FED. AID PROJECT | | |

Long Section Number

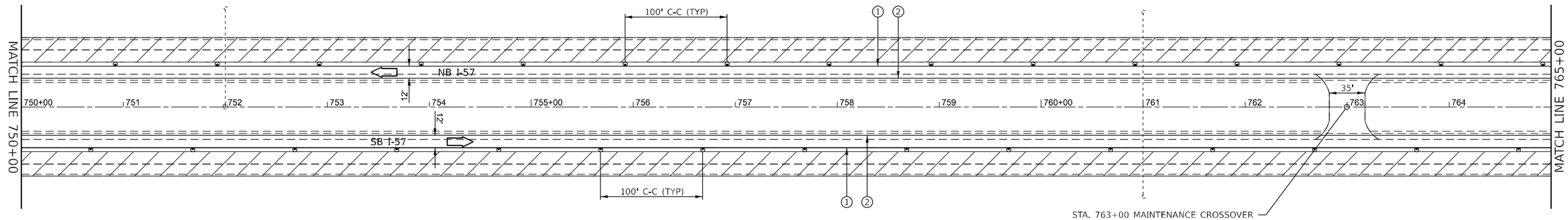


0 50 100 150
SCALE IN FEET

## LEGEND

- DIRECTION INDICATOR BARRICADE WITH STEADY BURN MONODIRECTIONAL LIGHT
- DRUMS WITH MONO-DIRECTIONAL STEADY BURNING LIGHTS
- DIRECTION OF TRAFFIC
- IMPACT ATTENUATOR, TEMPORARY (NON-REDIRECTIVE TL 3)
- TEMPORARY CONCRETE BARRIER
- ARROW BOARD
- CLASS A PATCHING UNDER STRUCTURES
- WORK ZONE
- (A) EXISTING PAVEMENT MARKING
- (1) TEMPORARY PAVEMENT MARKING MODIFIED URETHANE - WHITE
- (2) TEMPORARY PAVEMENT MARKING MODIFIED URETHANE - YELLOW
- (3) TEMPORARY PAVEMENT MARKING TYPE III TAPE - WHITE
- (4) TEMPORARY PAVEMENT MARKING TYPE III TAPE - YELLOW
- (5) SHORT TERM PAVEMENT MARKING

NOTES:
ALTERATIONS TO THE TRAFFIC CONTROL PLAN SHALL BE APPROVED BY THE ENGINEER.
USE TRAFFIC CONTROL STANDARD 701400 & 701406 FOR STAGE 4 WORKZONE. USE 701411 & 701456 FOR ALL RAMPS.
(NOT ALL TRAFFIC CONTROL DEVICES & SIGNING SHOWN) ADJUST RAMP OPENINGS IF REQUIRED.

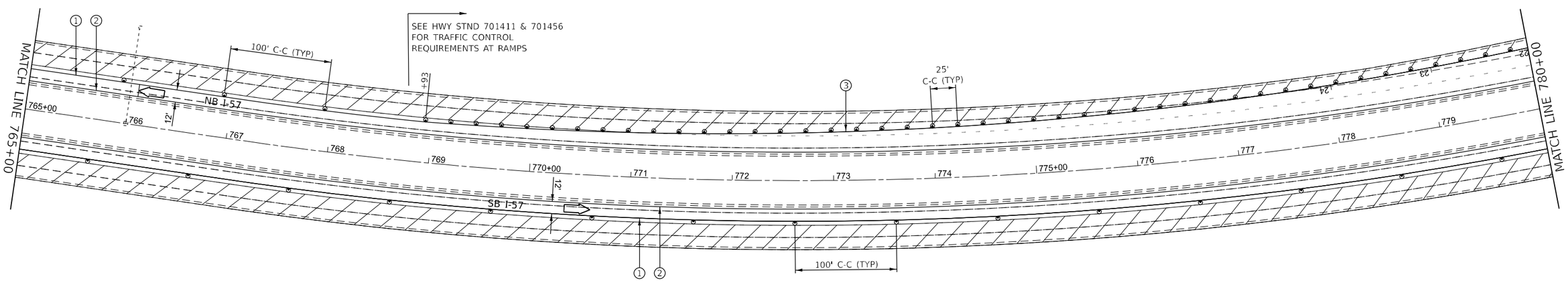


0 50 100 150
SCALE IN FEET

| | | | |
|---|---|---|---|
| USER NAME = Cody.M.Johnson | DESIGNED - | REVISED - | |
| | DRAWN - | REVISED - | |
| PLOT SCALE = 100.000 ' / in. | CHECKED - | REVISED - | |
| PLOT DATE = 12/15/2023 | DATE - | REVISED - | |

**STATE OF ILLINOIS**
**DEPARTMENT OF TRANSPORTATION**

**STAGE 4 TRAFFIC CONTROL**

SCALE: | SHEET 11 OF 17 SHEETS | STA. | TO STA.

| F.A.I RTE. | SECTION | COUNTY | TOTAL SHEETS | SHEET NO. |
|---|---|---|---|---|
| 57 | (38-6,38-5)RS,BRR,CLV | IROQUOIS | 213 | 183 |
| | | CONTRACT NO. 66H62 | | |
| | ILLINOIS | FED. AID PROJECT | | |

Long Section Number

MODEL: Stage 4 Plan Sheets
FILE NAME: pw://ildot-pw.bentley.com:PWIDOT/Documents/IDOT Offices/District 3/ORD Projects/D398H62/CADData/CADsheets/66H62-Plan-Stage 4

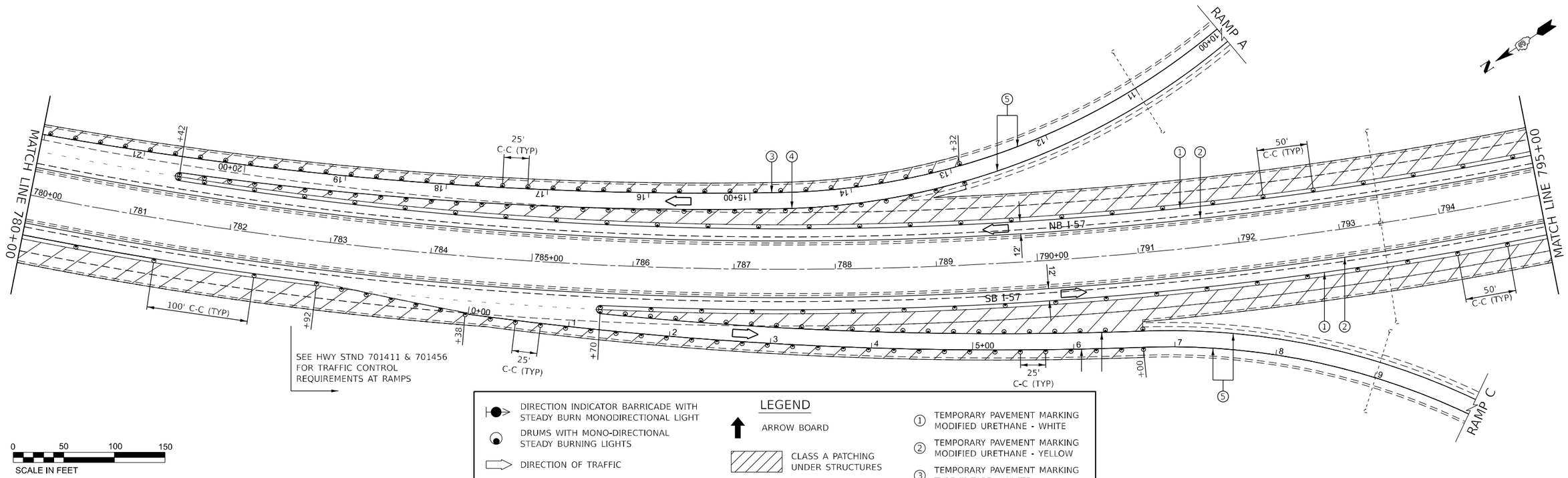


## LEGEND

- DIRECTION INDICATOR BARRICADE WITH STEADY BURN MONODIRECTIONAL LIGHT
- DRUMS WITH MONO-DIRECTIONAL STEADY BURNING LIGHTS
- DIRECTION OF TRAFFIC
- IMPACT ATTENUATOR, TEMPORARY (NON-REDIRECTIVE TL 3)
- TEMPORARY CONCRETE BARRIER
- ARROW BOARD
- CLASS A PATCHING UNDER STRUCTURES
- WORK ZONE
- (A) EXISTING PAVEMENT MARKING
- (1) TEMPORARY PAVEMENT MARKING MODIFIED URETHANE - WHITE
- (2) TEMPORARY PAVEMENT MARKING MODIFIED URETHANE - YELLOW
- (3) TEMPORARY PAVEMENT MARKING TYPE III TAPE - WHITE
- (4) TEMPORARY PAVEMENT MARKING TYPE III TAPE - YELLOW
- (5) SHORT TERM PAVEMENT MARKING

NOTES:
ALTERATIONS TO THE TRAFFIC CONTROL PLAN SHALL BE APPROVED BY THE ENGINEER.
USE TRAFFIC CONTROL STANDARD 701400 & 701406 FOR STAGE 4 WORKZONE. USE 701411 & 701456 FOR ALL RAMPS.
(NOT ALL TRAFFIC CONTROL DEVICES & SIGNING SHOWN) ADJUST RAMP OPENINGS IF REQUIRED.

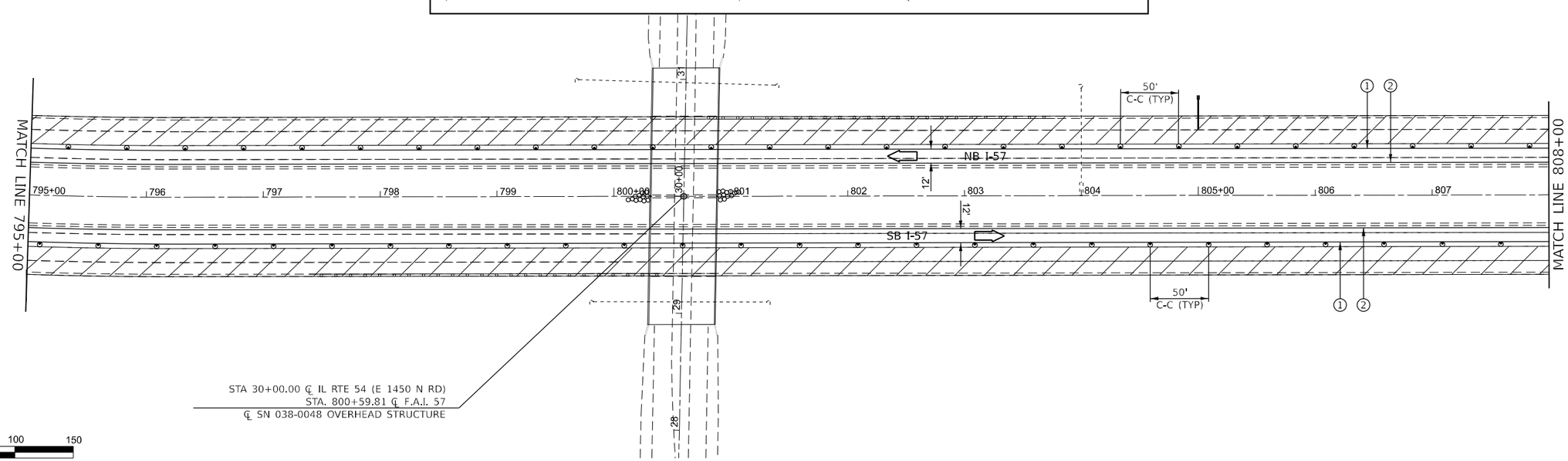


MODEL: Stage 4 Plan Sheets
FILE NAME: pw://ildot-pw.bentley.com:PWIDOT/Documents/IDOT Offices/District 3/ORD Projects/D398H62/CADData/CADsheets/66H62-Plan-Stage 4

| | | | |
|---|---|---|---|
| USER NAME = Cody.M.Johnson | DESIGNED - | REVISED - | |
| | DRAWN - | REVISED - | |
| PLOT SCALE = 100.000 ' / in. | CHECKED - | REVISED - | |
| PLOT DATE = 12/15/2023 | DATE - | REVISED - | |

**STATE OF ILLINOIS**
**DEPARTMENT OF TRANSPORTATION**

**STAGE 4 TRAFFIC CONTROL**

SCALE: | SHEET 12 OF 17 SHEETS | STA. | TO STA.

| F.A.I RTE. | SECTION | COUNTY | TOTAL SHEETS | SHEET NO. |
|---|---|---|---|---|
| 57 | (38-6,38-5)RS,BRR,CLV | IROQUOIS | 213 | 184 |
| | | CONTRACT NO. 66H62 | | |
| | ILLINOIS | FED. AID PROJECT | | |

Long Section Number

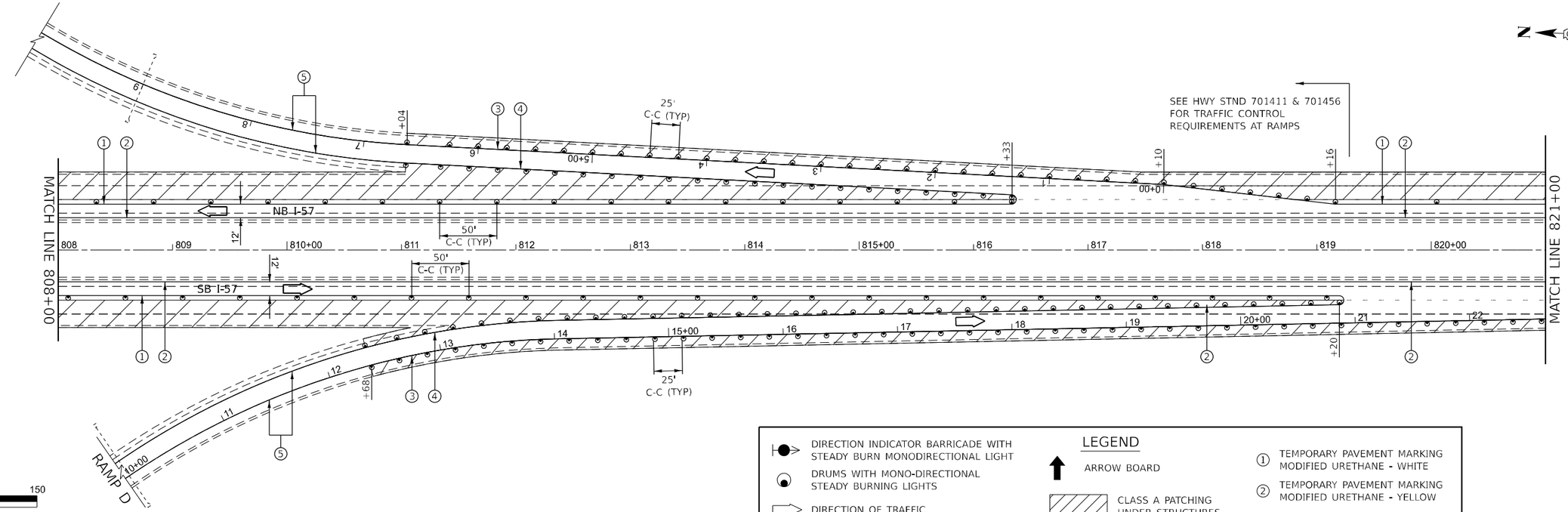


## LEGEND

- DIRECTION INDICATOR BARRICADE WITH STEADY BURN MONODIRECTIONAL LIGHT
- DRUMS WITH MONO-DIRECTIONAL STEADY BURNING LIGHTS
- DIRECTION OF TRAFFIC
- IMPACT ATTENUATOR, TEMPORARY (NON-REDIRECTIVE TL 3)
- TEMPORARY CONCRETE BARRIER
- ARROW BOARD
- CLASS A PATCHING UNDER STRUCTURES
- WORK ZONE
- (A) EXISTING PAVEMENT MARKING
- (1) TEMPORARY PAVEMENT MARKING MODIFIED URETHANE - WHITE
- (2) TEMPORARY PAVEMENT MARKING MODIFIED URETHANE - YELLOW
- (3) TEMPORARY PAVEMENT MARKING TYPE III TAPE - WHITE
- (4) TEMPORARY PAVEMENT MARKING TYPE III TAPE - YELLOW
- (5) SHORT TERM PAVEMENT MARKING

NOTES:
ALTERATIONS TO THE TRAFFIC CONTROL PLAN SHALL BE APPROVED BY THE ENGINEER.
USE TRAFFIC CONTROL STANDARD 701400 & 701406 FOR STAGE 4 WORKZONE. USE 701411 & 701456 FOR ALL RAMPS.
(NOT ALL TRAFFIC CONTROL DEVICES & SIGNING SHOWN) ADJUST RAMP OPENINGS IF REQUIRED.

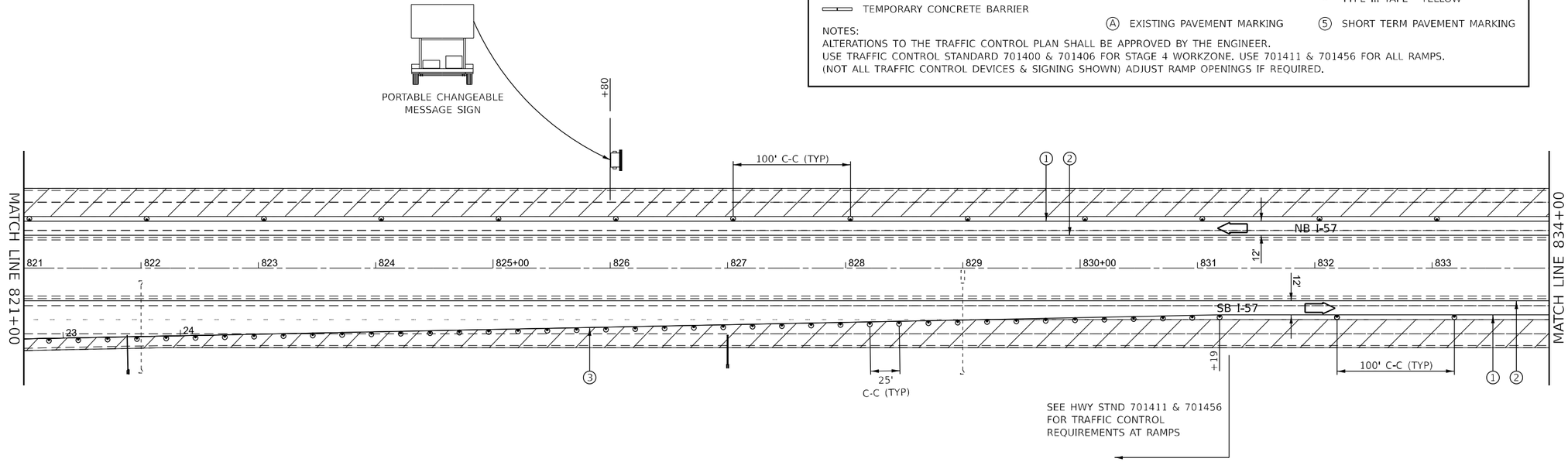


MODEL: Stage 4 Plan Sheets
FILE NAME: pw://ildot-pw.bentley.com:PWIDOT/Documents/IDOT Offices/District 3/ORD Projects/D398H62/CADData/CADsheets/66H62-Plan-Stage 4

| | | | |
|---|---|---|---|
| USER NAME = Cody.M.Johnson | DESIGNED - | REVISED - | |
| | DRAWN - | REVISED - | |
| PLOT SCALE = 100.000 ' / in. | CHECKED - | REVISED - | |
| PLOT DATE = 12/15/2023 | DATE - | REVISED - | |

**STATE OF ILLINOIS**
**DEPARTMENT OF TRANSPORTATION**

**STAGE 4 TRAFFIC CONTROL**

SCALE: | SHEET 13 OF 17 SHEETS | STA. | TO STA.

| F.A.I RTE. | SECTION | COUNTY | TOTAL SHEETS | SHEET NO. |
|---|---|---|---|---|
| 57 | (38-6,38-5)RS,BRR,CLV | IROQUOIS | 213 | 185 |
| | | CONTRACT NO. 66H62 | | |
| | ILLINOIS | FED. AID PROJECT | | |

Long Section Number

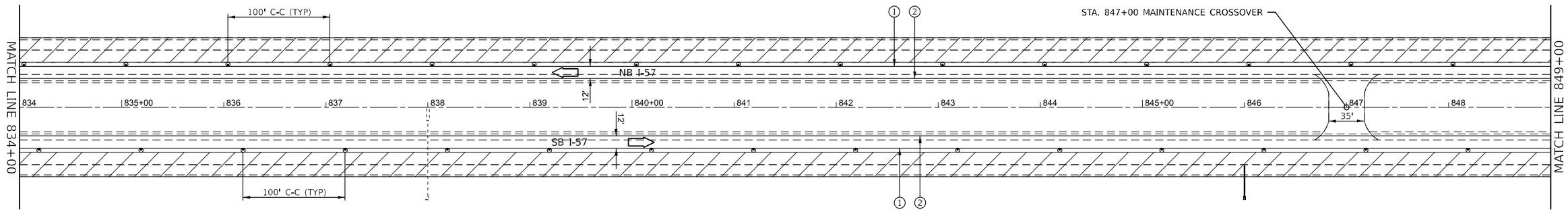


0 50 100 150
SCALE IN FEET

## LEGEND

- DIRECTION INDICATOR BARRICADE WITH STEADY BURN MONODIRECTIONAL LIGHT
- DRUMS WITH MONO-DIRECTIONAL STEADY BURNING LIGHTS
- DIRECTION OF TRAFFIC
- IMPACT ATTENUATOR, TEMPORARY (NON-REDIRECTIVE TL 3)
- TEMPORARY CONCRETE BARRIER
- ARROW BOARD
- CLASS A PATCHING UNDER STRUCTURES
- WORK ZONE
- (A) EXISTING PAVEMENT MARKING
- (1) TEMPORARY PAVEMENT MARKING MODIFIED URETHANE - WHITE
- (2) TEMPORARY PAVEMENT MARKING MODIFIED URETHANE - YELLOW
- (3) TEMPORARY PAVEMENT MARKING TYPE III TAPE - WHITE
- (4) TEMPORARY PAVEMENT MARKING TYPE III TAPE - YELLOW
- (5) SHORT TERM PAVEMENT MARKING

NOTES:
ALTERATIONS TO THE TRAFFIC CONTROL PLAN SHALL BE APPROVED BY THE ENGINEER.
USE TRAFFIC CONTROL STANDARD 701400 & 701406 FOR STAGE 4 WORKZONE. USE 701411 & 701456 FOR ALL RAMPS.
(NOT ALL TRAFFIC CONTROL DEVICES & SIGNING SHOWN) ADJUST RAMP OPENINGS IF REQUIRED.

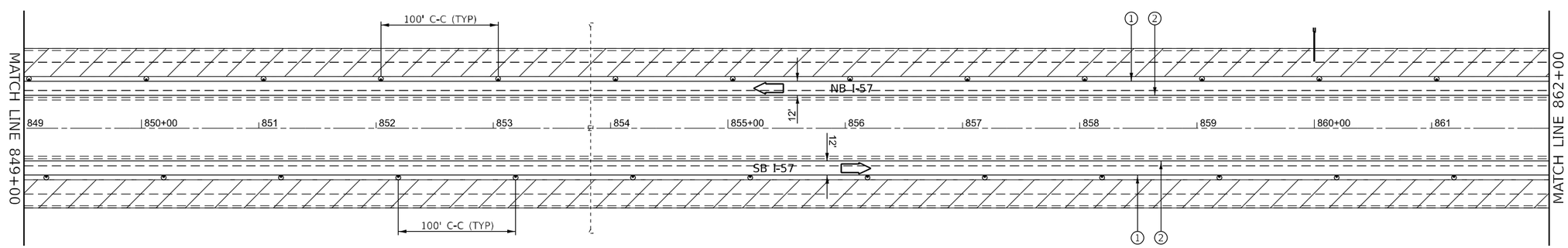


0 50 100 150
SCALE IN FEET

MODEL: Stage 4 Plan Sheets
FILE NAME: pw:\\ildot-pw.bentley.com:PWIDOT\Documents\IDOT Offices\District 3\ORD Projects\D398H62\CADData\CADsheets\66H62-Plan-Stage 4

| | | | |
|---|---|---|---|
| USER NAME = Cody.M.Johnson | DESIGNED - | REVISED - | |
| | DRAWN - | REVISED - | |
| PLOT SCALE = 100.000 ' / in. | CHECKED - | REVISED - | |
| PLOT DATE = 12/15/2023 | DATE - | REVISED - | |

**STATE OF ILLINOIS**
**DEPARTMENT OF TRANSPORTATION**

**STAGE 4 TRAFFIC CONTROL**

SCALE: | SHEET 14 OF 17 SHEETS | STA. | TO STA.

| F.A.I RTE. | SECTION | COUNTY | TOTAL SHEETS | SHEET NO. |
|---|---|---|---|---|
| 57 | (38-6,38-5)RS,BRR,CLV | IROQUOIS | 213 | 186 |
| | | CONTRACT NO. 66H62 | | |
| | ILLINOIS | FED. AID PROJECT | | |

Long Section Number

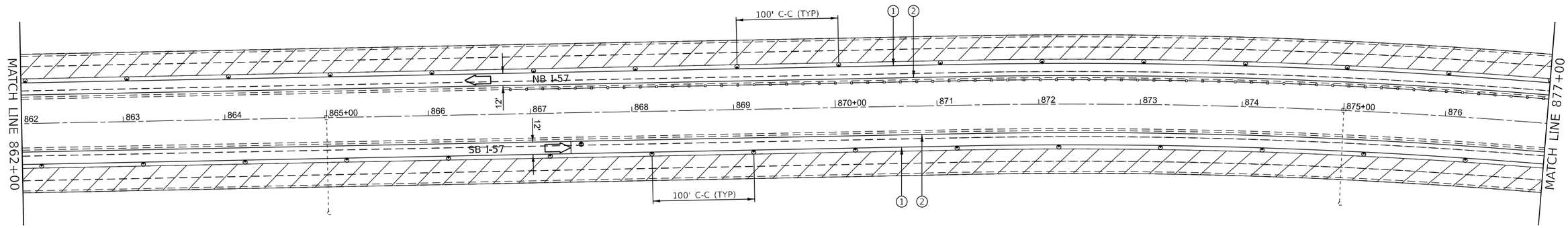


0 50 100 150
SCALE IN FEET

## LEGEND

- DIRECTION INDICATOR BARRICADE WITH STEADY BURN MONODIRECTIONAL LIGHT
- DRUMS WITH MONO-DIRECTIONAL STEADY BURNING LIGHTS
- DIRECTION OF TRAFFIC
- IMPACT ATTENUATOR, TEMPORARY (NON-REDIRECTIVE TL 3)
- TEMPORARY CONCRETE BARRIER
- ARROW BOARD
- CLASS A PATCHING UNDER STRUCTURES
- WORK ZONE
- (A) EXISTING PAVEMENT MARKING
- (1) TEMPORARY PAVEMENT MARKING MODIFIED URETHANE - WHITE
- (2) TEMPORARY PAVEMENT MARKING MODIFIED URETHANE - YELLOW
- (3) TEMPORARY PAVEMENT MARKING TYPE III TAPE - WHITE
- (4) TEMPORARY PAVEMENT MARKING TYPE III TAPE - YELLOW
- (5) SHORT TERM PAVEMENT MARKING

NOTES:
ALTERATIONS TO THE TRAFFIC CONTROL PLAN SHALL BE APPROVED BY THE ENGINEER.
USE TRAFFIC CONTROL STANDARD 701400 & 701406 FOR STAGE 4 WORKZONE. USE 701411 & 701456 FOR ALL RAMPS.
(NOT ALL TRAFFIC CONTROL DEVICES & SIGNING SHOWN) ADJUST RAMP OPENINGS IF REQUIRED.

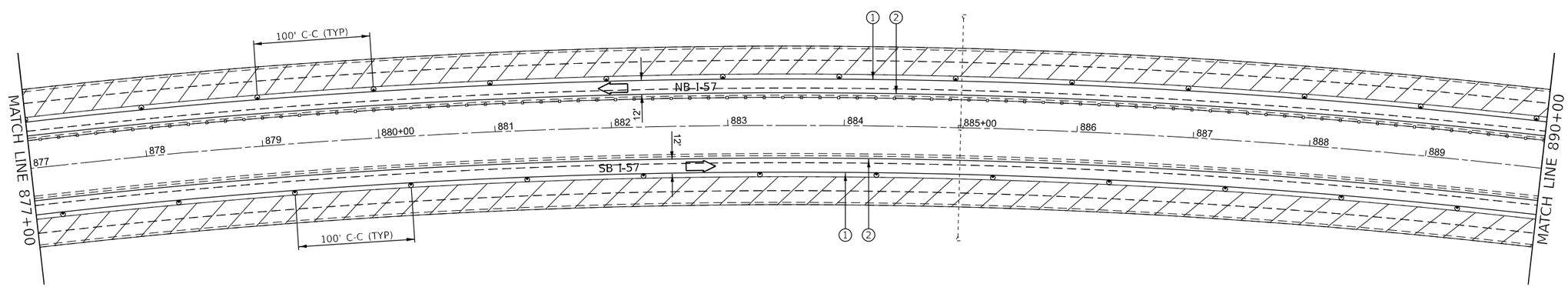


0 50 100 150
SCALE IN FEET

MODEL: Stage 4 Plan Sheets
FILE NAME: pw://ildot-pw.bentley.com:PWIDOT/Documents/IDOT Offices/District 3/ORD Projects/D398H62/CADData/CADsheets/66H62-Plan-Stage 4

| | | | |
|---|---|---|---|
| USER NAME = Cody.M.Johnson | DESIGNED - | REVISED - | |
| | DRAWN - | REVISED - | |
| PLOT SCALE = 100.000 ' / in. | CHECKED - | REVISED - | |
| PLOT DATE = 12/15/2023 | DATE - | REVISED - | |

**STATE OF ILLINOIS**
**DEPARTMENT OF TRANSPORTATION**

**STAGE 4 TRAFFIC CONTROL**

SCALE: | SHEET 15 OF 17 SHEETS | STA. | TO STA.

| F.A.I RTE. | SECTION | COUNTY | TOTAL SHEETS | SHEET NO. |
|---|---|---|---|---|
| 57 | (38-6,38-5)RS,BRR,CLV | IROQUOIS | 213 | 187 |
| | | CONTRACT NO. 66H62 | | |
| | ILLINOIS | FED. AID PROJECT | | |

Long Section Number

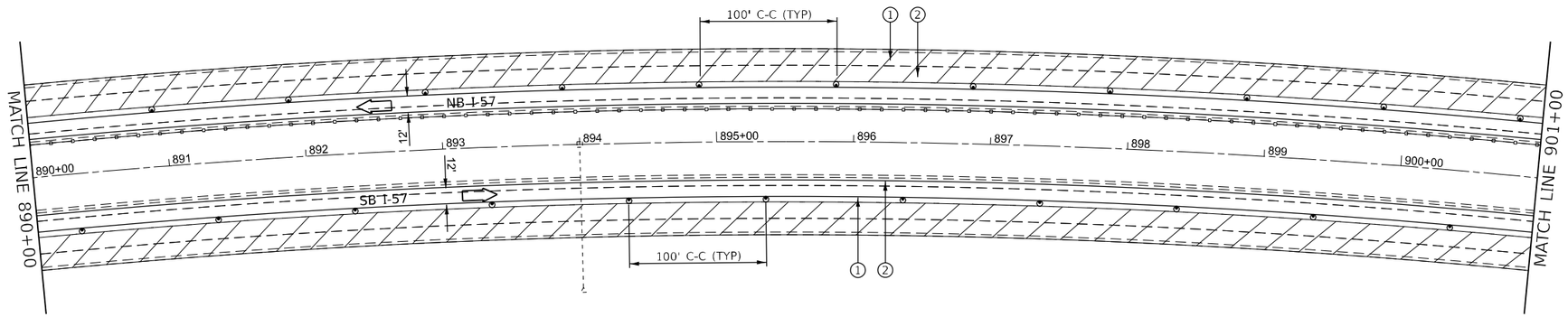


0 50 100 150
SCALE IN FEET

## LEGEND

- DIRECTION INDICATOR BARRICADE WITH STEADY BURN MONODIRECTIONAL LIGHT
- DRUMS WITH MONO-DIRECTIONAL STEADY BURNING LIGHTS
- DIRECTION OF TRAFFIC
- IMPACT ATTENUATOR, TEMPORARY (NON-REDIRECTIVE TL 3)
- TEMPORARY CONCRETE BARRIER
- ARROW BOARD
- CLASS A PATCHING UNDER STRUCTURES
- WORK ZONE
- (A) EXISTING PAVEMENT MARKING
- (1) TEMPORARY PAVEMENT MARKING MODIFIED URETHANE - WHITE
- (2) TEMPORARY PAVEMENT MARKING MODIFIED URETHANE - YELLOW
- (3) TEMPORARY PAVEMENT MARKING TYPE III TAPE - WHITE
- (4) TEMPORARY PAVEMENT MARKING TYPE III TAPE - YELLOW
- (5) SHORT TERM PAVEMENT MARKING

NOTES:
ALTERATIONS TO THE TRAFFIC CONTROL PLAN SHALL BE APPROVED BY THE ENGINEER.
USE TRAFFIC CONTROL STANDARD 701400 & 701406 FOR STAGE 4 WORKZONE. USE 701411 & 701456 FOR ALL RAMPS.
(NOT ALL TRAFFIC CONTROL DEVICES & SIGNING SHOWN) ADJUST RAMP OPENINGS IF REQUIRED.

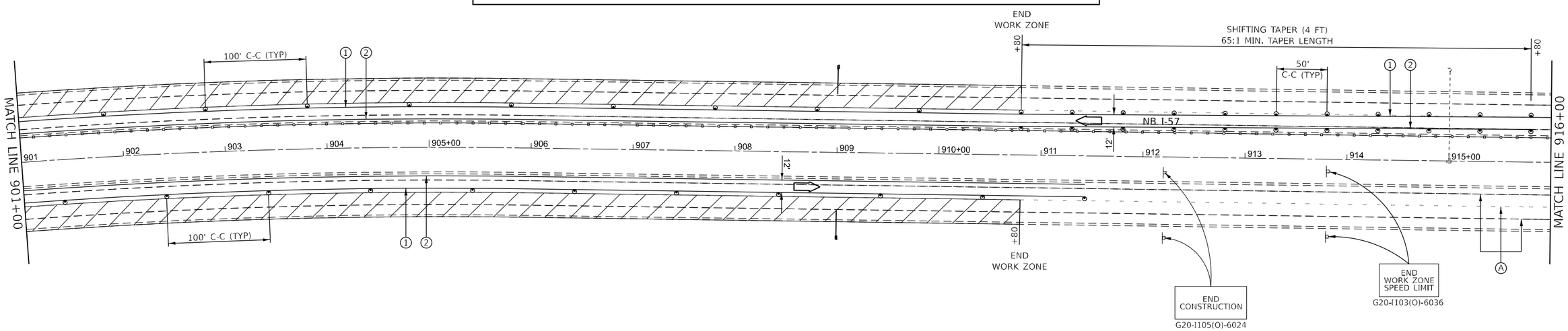


0 50 100 150
SCALE IN FEET

MODEL: Stage 4 Plan Sheets
FILE NAME: pw://ildot.bentley.com:PWIDOT/Documents/IDOT Offices/District 3/ORD Projects/D398H62/CADData/CADsheets/66H62-Plan-Stage 4

| | | | |
|---|---|---|---|
| USER NAME = Cody.M.Johnson | DESIGNED - | REVISED - | |
| | DRAWN - | REVISED - | |
| PLOT SCALE = 100.000 ' / in. | CHECKED - | REVISED - | |
| PLOT DATE = 12/15/2023 | DATE - | REVISED - | |

**STATE OF ILLINOIS**
**DEPARTMENT OF TRANSPORTATION**

**STAGE 4 TRAFFIC CONTROL**

SCALE: | SHEET 16 OF 17 SHEETS | STA. | TO STA.

| F.A.I RTE. | SECTION | COUNTY | TOTAL SHEETS | SHEET NO. |
|---|---|---|---|---|
| 57 | (38-6,38-5)RS,BRR,CLV | IROQUOIS | 213 | 188 |
| | | CONTRACT NO. 66H62 | | |
| | ILLINOIS | FED. AID PROJECT | | |

Long Section Number

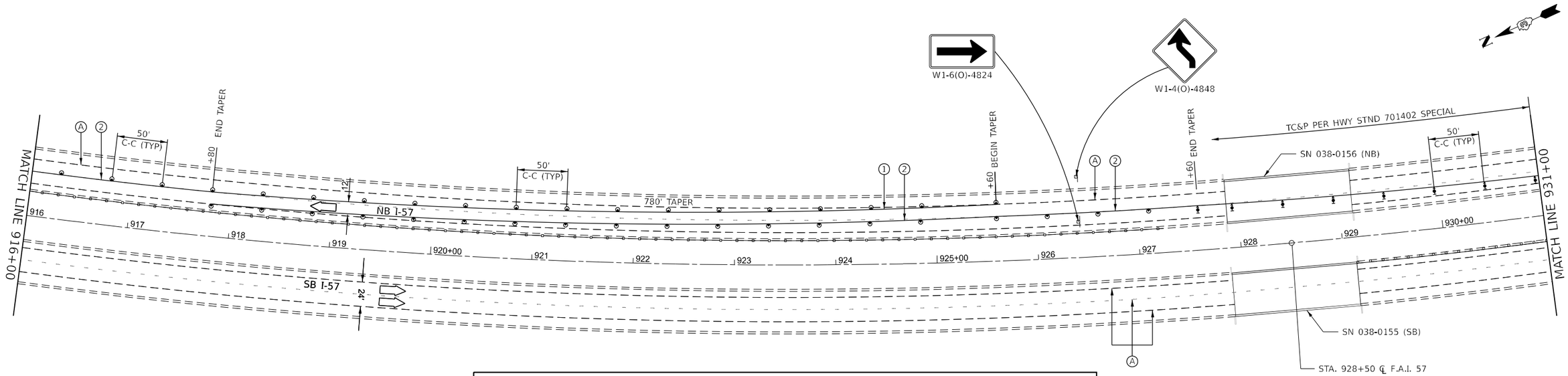


0 50 100 150
SCALE IN FEET

## LEGEND

- DIRECTION INDICATOR BARRICADE WITH STEADY BURN MONODIRECTIONAL LIGHT
- DRUMS WITH MONO-DIRECTIONAL STEADY BURNING LIGHTS
- DIRECTION OF TRAFFIC
- IMPACT ATTENUATOR, TEMPORARY (NON-REDIRECTIVE TL 3)
- TEMPORARY CONCRETE BARRIER
- ARROW BOARD
- CLASS A PATCHING UNDER STRUCTURES
- WORK ZONE
- (A) EXISTING PAVEMENT MARKING
- (1) TEMPORARY PAVEMENT MARKING MODIFIED URETHANE - WHITE
- (2) TEMPORARY PAVEMENT MARKING MODIFIED URETHANE - YELLOW
- (3) TEMPORARY PAVEMENT MARKING TYPE III TAPE - WHITE
- (4) TEMPORARY PAVEMENT MARKING TYPE III TAPE - YELLOW
- (5) SHORT TERM PAVEMENT MARKING

NOTES:
ALTERATIONS TO THE TRAFFIC CONTROL PLAN SHALL BE APPROVED BY THE ENGINEER.
USE TRAFFIC CONTROL STANDARD 701400 & 701406 FOR STAGE 4 WORKZONE. USE 701411 & 701456 FOR ALL RAMPS.
(NOT ALL TRAFFIC CONTROL DEVICES & SIGNING SHOWN) ADJUST RAMP OPENINGS IF REQUIRED.

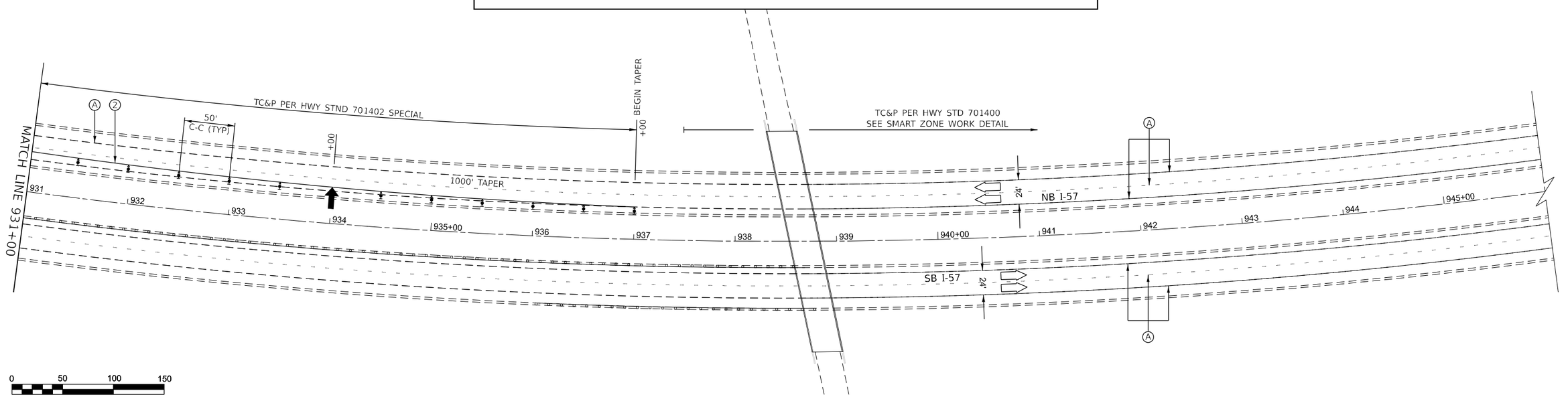


0 50 100 150
SCALE IN FEET

MODEL: Stage 4 Plan Sheets
FILE NAME: pw://ildot-pw.bentley.com:PWIDOT/Documents/IDOT Offices/District 3/ORD Projects/D389H63/CADData/CADsheets/66H62-Plan-Stage 4

| | | | |
|---|---|---|---|
| USER NAME = Cody.M.Johnson | DESIGNED - | REVISED - | |
| | DRAWN - | REVISED - | |
| PLOT SCALE = 100.000 ' / in. | CHECKED - | REVISED - | |
| PLOT DATE = 12/15/2023 | DATE - | REVISED - | |

**STATE OF ILLINOIS**
**DEPARTMENT OF TRANSPORTATION**

**STAGE 4 TRAFFIC CONTROL**

SCALE: | SHEET 17 OF 17 SHEETS | STA. | TO STA.

| F.A.I RTE. | SECTION | COUNTY | TOTAL SHEETS | SHEET NO. |
|---|---|---|---|---|
| 57 | (38-6,38-5)RS,BRR,CLV | IROQUOIS | 213 | 189 |
| | | CONTRACT NO. 66H62 | | |
| | ILLINOIS | FED. AID PROJECT | | |

Long Section Number

# STANDARD DESIGN
# REINFORCEMENT FOR CONTINUOUSLY REINFORCED P.C.C. PAVEMENT

## BAR REINFORCEMENT

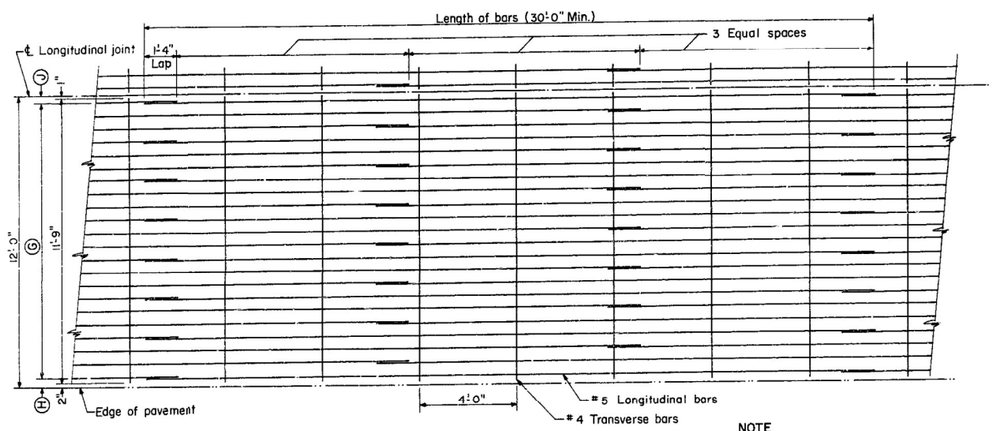


LAP DETAIL I

NOTE
For optional transverse bar construction see "Plans of Optional Longitudinal Sawed Joint Tie Steel" shown on the pavement detail drawings.

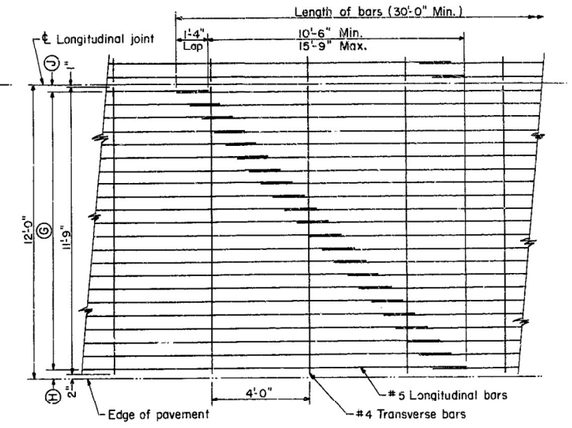


LAP DETAIL II

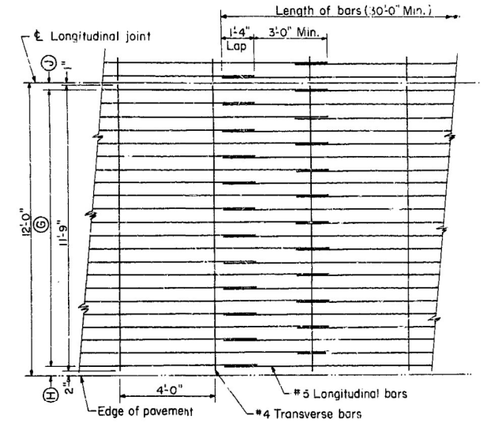


LAP DETAIL III

## FABRIC REINFORCEMENT

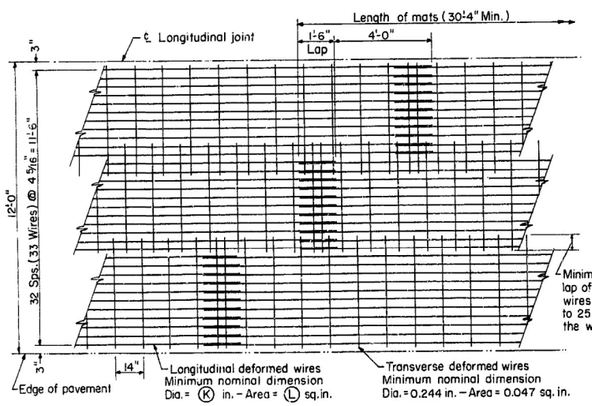


DETAIL OF 4 5/16 x 14 FABRIC

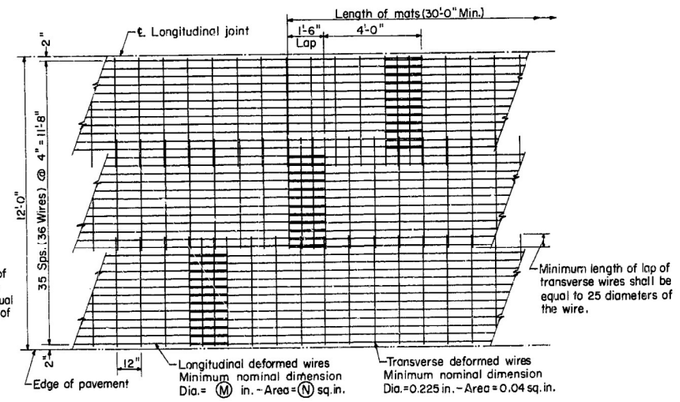


DETAIL OF 4 x 12 FABRIC

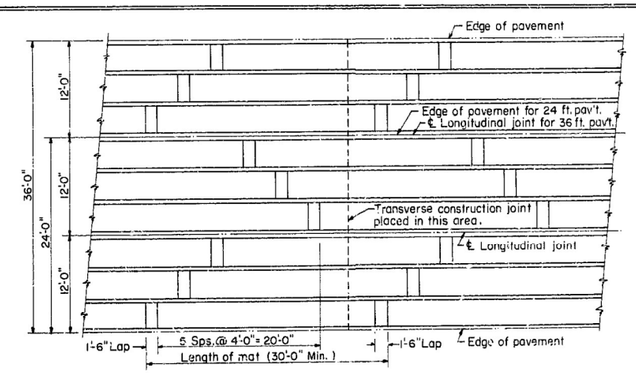


TYPICAL MAT PLACEMENT PATTERN

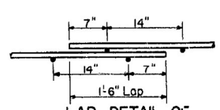


LAP DETAIL OF LONGITUDINAL WIRES

NOTE
When approved by the Engineer the Contractor may use fabric widths other than those shown.

For optional transverse deformed wire construction see "Plans of Optional Longitudinal Sawed Joint Tie Steel" shown on the pavement detail drawings.

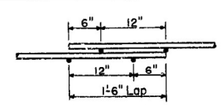


LAP DETAIL OF LONGITUDINAL WIRES

| Pav't. Thk's. | (G) | (H) | (J) | (K) | (L) | (M) | (N) |
|---|---|---|---|---|---|---|---|
| 7" | 22 Sps. (23 Bars) @ 6 1/4" = 11'-5 1/2" | 3 3/4" | 2 3/4" | 0.522 | 0.214 | 0.500 | 0.196 |
| 8" | 21 Sps. (22 Bars) @ 6 1/2" = 11'-4 1/2" | 4 1/4" | 3 1/4" | 0.516 | 0.209 | 0.495 | 0.192 |
| 9" | 24 Sps. (25 Bars) @ 5 3/4" = 11'-6" | 3 1/2" | 2 1/2" | 0.548 | 0.236 | 0.524 | 0.216 |

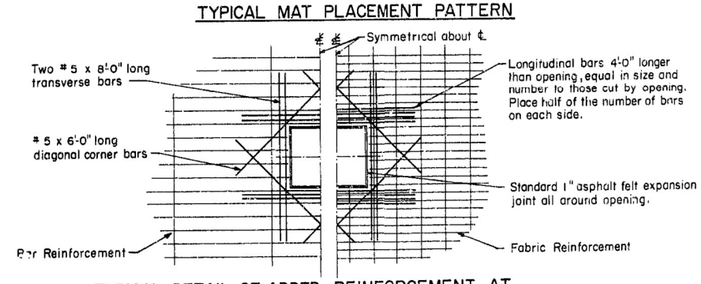


TYPICAL DETAIL OF ADDED REINFORCEMENT AT OPENINGS FOR MANHOLES, ETC. UP TO 4 FT. WIDE

STATE OF ILLINOIS
DEPARTMENT OF PUBLIC WORKS & BUILDINGS
DIVISION OF HIGHWAYS

PASSED January 4 1965
W. L. Van Cuyndall
Engineer of Road Plans And Contracts
APPROVED January 4 1965
H. J. Deleon
Engineer of Design

| REVISIONS | |
|---|---|
| BY | DATE |
| W.F | 4-1-65 |
| W.F. | 4-20-66 |

C-2.10 a

STANDARD 2225-2
(Full Size)
WF

**STANDARD 2225-2 PROVIDED SHOWS REINFORCEMENT USED IN ORIGINAL CONSTRUCTION OF CRC PAVEMENT.**

| | | | |
|---|---|---|---|
| USER NAME = Joseph.Zagar | DESIGNED - | REVISED - | |
| | DRAWN - | REVISED - | |
| PLOT SCALE = 100,000 ' / in. | CHECKED - | REVISED - | |
| PLOT DATE = 12/15/2023 | DATE - | REVISED - | |

**STATE OF ILLINOIS**
**DEPARTMENT OF TRANSPORTATION**

**FOR INFORMATION ONLY**

SCALE: SHEET OF SHEETS STA. TO STA.

| F.A.I. RTE. | SECTION | COUNTY | TOTAL SHEETS | SHEET NO. |
|---|---|---|---|---|
| 57 | (38-6,38-5)RS,BRR,CLV | IROQUOIS | 213 | 190 |
| | | CONTRACT NO. 66H62 | | |
| | ILLINOIS | FED. AID PROJECT | | |

Long Section Number

MODEL: Default
FILE NAME: pw://illinois.bentley.com:PWIDOT/Documents/IDOT Offices/District 3/ORD Projects/D369H62/CAD Data/CADsheets/D369H62-sheets

CONTRACT NO. 66685

| F.A.I. RTE. | SECTION | COUNTY | TOTAL SHEETS | SHEET NO. |
|---|---|---|---|---|
| 57 | (38-3,38-5)L | IROQUOIS | 16 | 9 |
| STA. | TO STA. | | | |
| FED. ROAD DIST. NO. | ILLINOIS | FED. AID PROJECT | | |

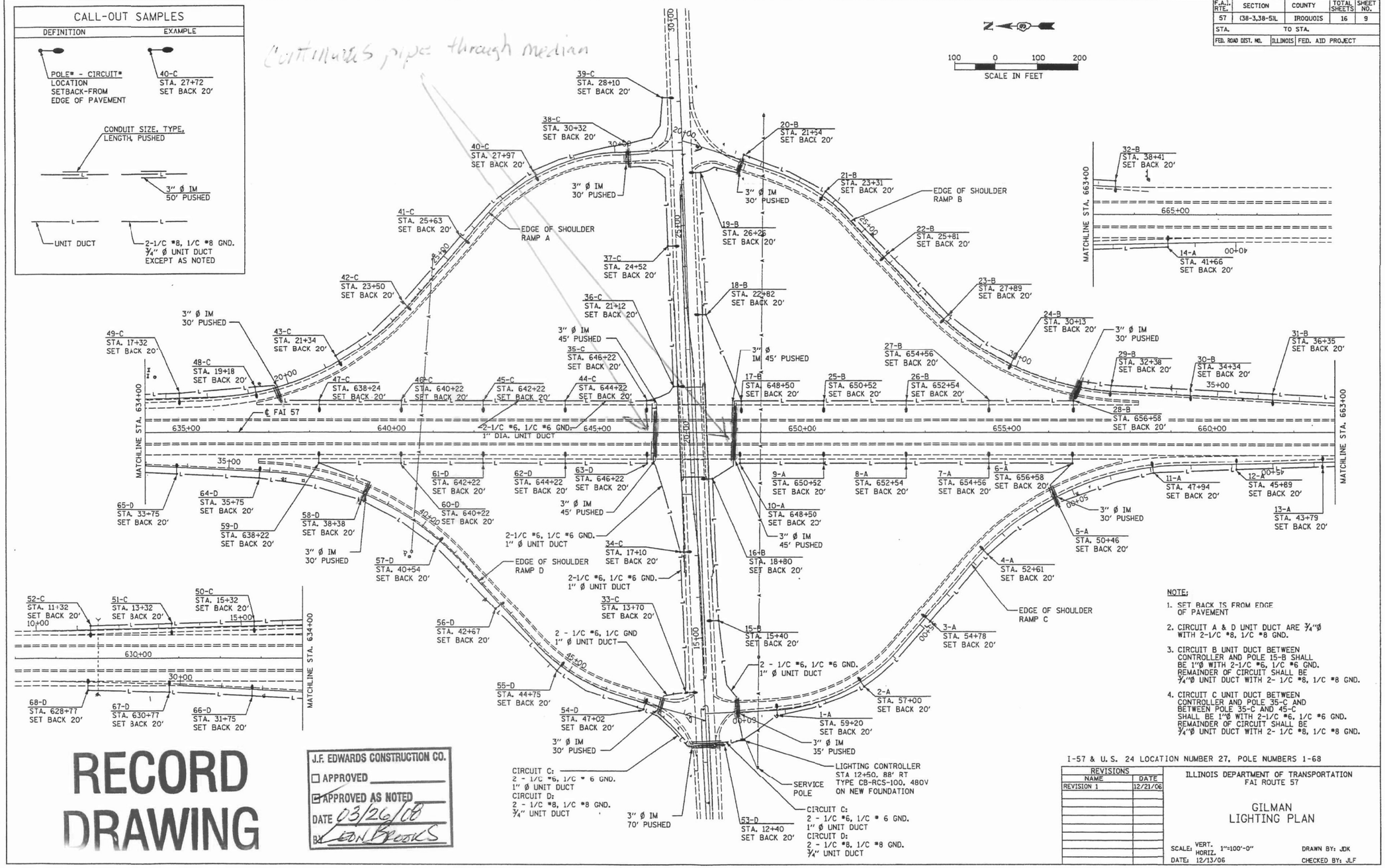


NOTE:

1. SET BACK IS FROM EDGE OF PAVEMENT
2. CIRCUIT A & D UNIT DUCT ARE 3/4"Ø WITH 2-1/C #8, 1/C #8 GND.
3. CIRCUIT B UNIT DUCT BETWEEN CONTROLLER AND POLE 15-B SHALL BE 1"Ø WITH 2-1/C #6, 1/C #6 GND. REMAINDER OF CIRCUIT SHALL BE 3/4"Ø UNIT DUCT WITH 2- 1/C #8, 1/C #8 GND.
4. CIRCUIT C UNIT DUCT BETWEEN CONTROLLER AND POLE 35-C AND BETWEEN POLE 35-C AND 45-C SHALL BE 1"Ø WITH 2-1/C #6, 1/C #6 GND. REMAINDER OF CIRCUIT SHALL BE 3/4"Ø UNIT DUCT WITH 2- 1/C #8, 1/C #8 GND.

I-57 & U. S. 24 LOCATION NUMBER 27, POLE NUMBERS 1-68

| REVISIONS | |
|---|---|
| NAME | DATE |
| REVISION 1 | 12/21/06 |

ILLINOIS DEPARTMENT OF TRANSPORTATION
FAI ROUTE 57

GILMAN
LIGHTING PLAN

SCALE: VERT. HORIZ. 1"=100'-0"
DATE: 12/13/06
DRAWN BY: JDK
CHECKED BY: JLF

RECORD DRAWING

J.F. EDWARDS CONSTRUCTION CO.
☐ APPROVED
☑ APPROVED AS NOTED
DATE 03/26/08
BY LEON BROOKS

Prepared by: Foth & Van Dyke and Associates, Inc.

FVD # 06I008

# US-24 INTERCHANGE - LOCATIONS OF BURIED CABLE FOR LIGHTING

| USER NAME = Joseph.Zagar | DESIGNED - | REVISED - |
|---|---|---|
| | DRAWN - | REVISED - |
| PLOT SCALE = 100,000 ' / in. | CHECKED - | REVISED - |
| PLOT DATE = 12/15/2023 | DATE - | REVISED - |

STATE OF ILLINOIS
DEPARTMENT OF TRANSPORTATION

FOR INFORMATION ONLY

SCALE: SHEET OF SHEETS STA. TO STA.

| F.A.I. RTE. | SECTION | COUNTY | TOTAL SHEETS | SHEET NO. |
|---|---|---|---|---|
| 57 | (38-6,38-5)RS,BRR,CLV | IROQUOIS | 213 | 191 |
| | | CONTRACT NO. 66H62 | | |
| | | ILLINOIS | FED. AID PROJECT | |

Long Section Number

MODEL: Default
FILE NAME: pw://ildot-pw.bentley.com:PWIDOT/Documents/IDOT Offices/District 3/ORD Projects/D366H62/CADData/CADsheets/D366H62-details

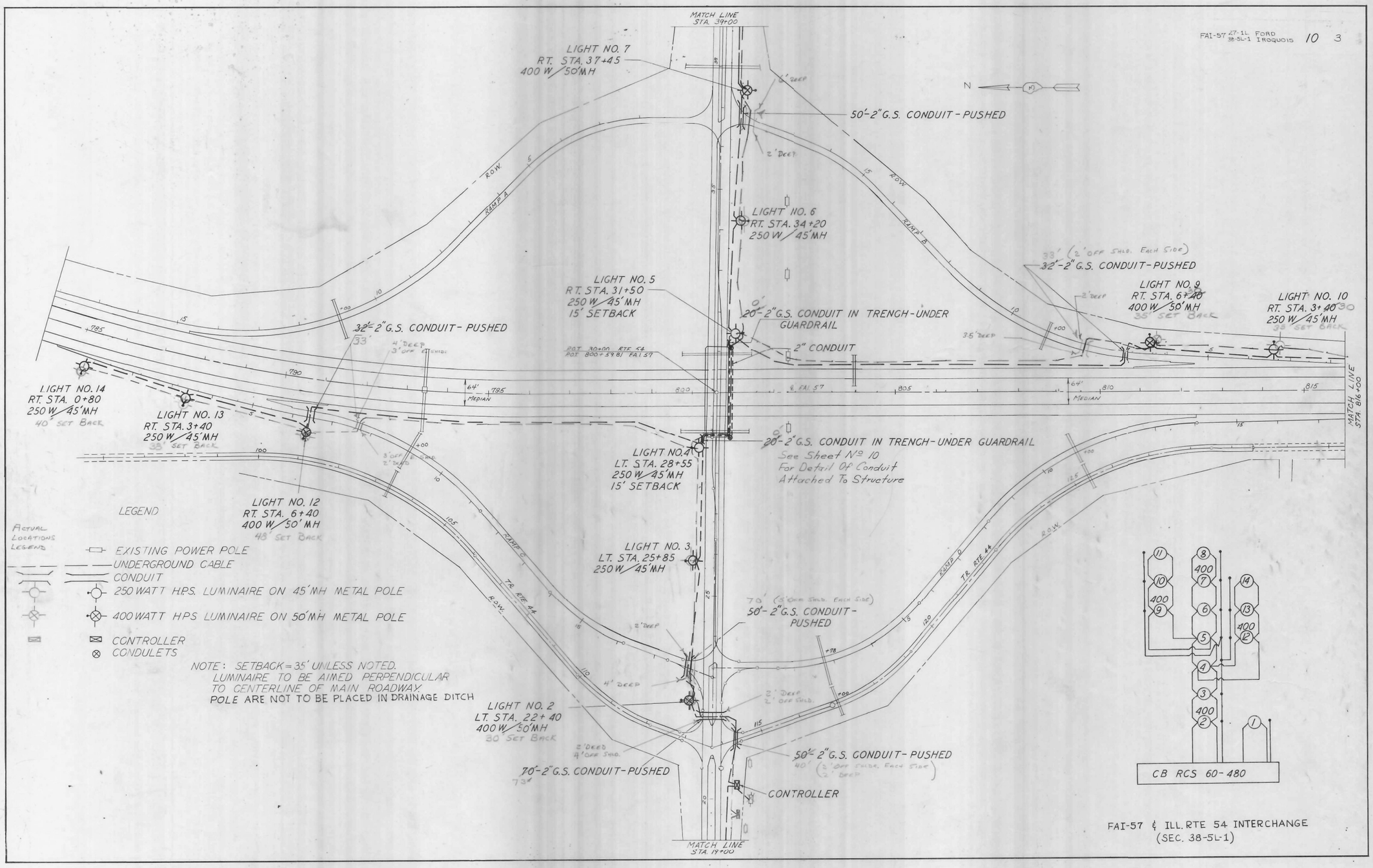


# IL-54 INTERCHANGE - LOCATIONS OF BURIED CABLE FOR LIGHTING

| | | | |
|---|---|---|---|
| USER NAME = Joseph.Zagar | DESIGNED - | REVISED - | |
| | DRAWN - | REVISED - | |
| PLOT SCALE = 100,000 ' / in. | CHECKED - | REVISED - | |
| PLOT DATE = 12/15/2023 | DATE - | REVISED - | |

**STATE OF ILLINOIS**
**DEPARTMENT OF TRANSPORTATION**

**FOR INFORMATION ONLY**

SCALE: SHEET OF SHEETS STA. TO STA.

| F.A.I. RTE. | SECTION | COUNTY | TOTAL SHEETS | SHEET NO. |
|---|---|---|---|---|
| 57 | (38-6,38-5)RS,BRR,CLV | IROQUOIS | 213 | 192 |
| | | CONTRACT NO. 66H62 | | |
| | | ILLINOIS FED. AID PROJECT | | |

Long Section Number

MODEL: Default
FILE NAME: pw://ildot-pw.bentley.com:PWIDOT/Documents/IDOT Offices/District 3/ORD Projects/D366H62/CADData/CADsheets/D366H62-details

57 27-1L FORD 38-5L-1 IROQUOIS 10 4

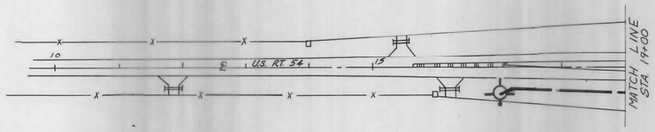


LIGHT Nº 1
RT. STA. 17+00
250 W/45' MH
SETBACK 30 FT.

LIGHT Nº 11
RT. STA. 0+80 RAMP B = LT. STA. 816+8598 F.A.I. 57
250 W/45' MH
36' SET BACK

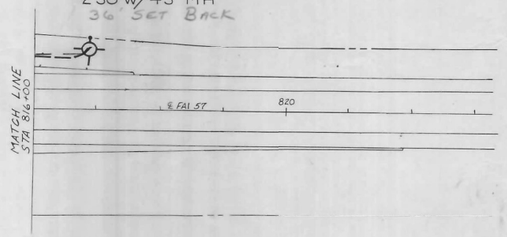


LIGHT Nº 8
LT. STA. 41+00
250 W/45' MH
30' SET BACK
62'-2" G.S. CONDUIT - PUSHED
64'

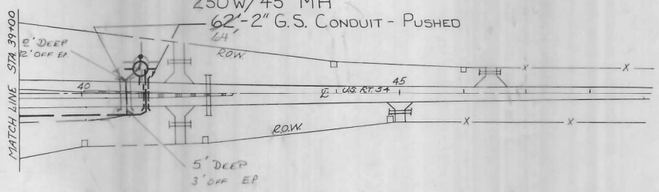


FAI-57 ℄ ILL RTE 54 INTERCHANGE
SEC 38-5L-1

# IL-54 INTERCHANGE - LOCATIONS OF BURIED CABLE FOR LIGHTING

MODEL: Default
FILE NAME: pw://ildot-pw.bentley.com:PWIDOT/Documents/IDOT Offices/District 3/ORD Projects/63968-H62/CAD Data/CAD sheets/D3968H62-details

| | | | |
|---|---|---|---|
| USER NAME = Joseph.Zagar | DESIGNED - | REVISED - | |
| | DRAWN - | REVISED - | |
| PLOT SCALE = 100.000 ' / in. | CHECKED - | REVISED - | |
| PLOT DATE = 12/15/2023 | DATE - | REVISED - | |

STATE OF ILLINOIS
DEPARTMENT OF TRANSPORTATION

FOR INFORMATION ONLY

SCALE: SHEET OF SHEETS STA. TO STA.

| F.A.I. RTE. | SECTION | COUNTY | TOTAL SHEETS | SHEET NO. |
|---|---|---|---|---|
| 57 | (38-6,38-5)RS,BRR,CLV | IROQUOIS | 213 | 193 |

CONTRACT NO. 66H62

ILLINOIS FED. AID PROJECT

Long Section Number

MODEL: Default
FILE NAME: pw://ildot-pw.bentley.com:PWIDOT/Documents/IDOT Offices/District 3/ORD Projects/D366H62/CADData/CADsheets/D366H62-details

SHEET 1 OF 1

STATE OF ILLINOIS
DEPARTMENT OF PUBLIC WORKS & BUILDINGS
DIVISION OF HIGHWAYS

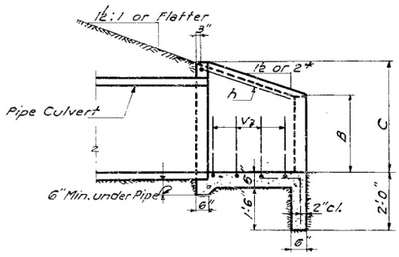


SECTION A-A

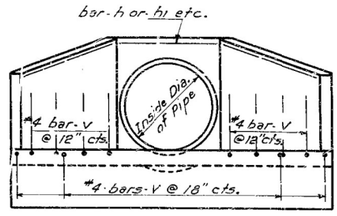


END VIEW

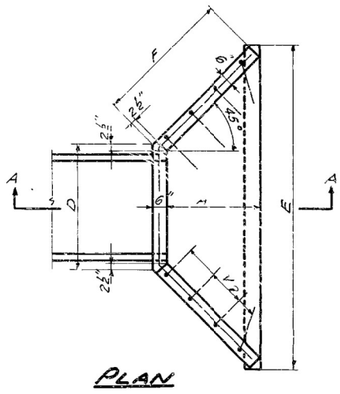


PLAN

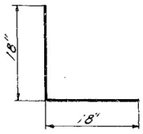


BAR V

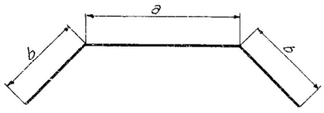


BARS h TO h9

Bend in field
One Req'd. in each headwall

| Mark | a | b |
|---|---|---|
| h | 1'-10" | 2'-5½" |
| h1 | 1'-10" | 3'-2½" |
| h2 | 2'-1" | 2'-5½" |
| h3 | 2'-1" | 3'-2½" |
| h4 | 2'-9" | 3'-5" |
| h5 | 2'-9" | 4'-1½" |
| h6 | 3'-3" | 3'-10½" |
| h7 | 3'-3" | 4'-10½" |
| h8 | 3'-11" | 4'-8" |
| h9 | 3'-11" | 5'-9½" |
| | | |
| | | |

TABLE OF DIMENSIONS

| Design No. | Inside dia. of Pipe | Slope of * Fill | Dimensions A | B | C | D | E | F | Cl "X" Conc. 2 Hdwls. Cu. Yds. | Reinforcement Bars h-Bars Mark | Length | V-Bars No. | Total Wt. 2 Hdwls. |
|---|---|---|---|---|---|---|---|---|---|---|---|---|---|
| D15-1½ | 15" | 1½:1 | 1'-7" | 10" | 1'-11" | 2'-0" | 5'-5½" | 2'-5½" | 0.9 | h | 6'-9" | 16 | 40 |
| D15-2 | 15" | 2:1 | 2'-2" | 10" | 1'-11" | 2'-0" | 6'-9½" | 3'-9½" | 1.2 | h1 | 8'-9" | 22 | 60 |
| D18-1½ | 18" | 1½:1 | 1'-7" | 1'-1" | 2'-2" | 2'-3" | 5'-8½" | 2'-5½" | 1.0 | h2 | 7'-0" | 16 | 40 |
| D18-2 | 18" | 2:1 | 2'-2" | 1'-1" | 2'-2" | 2'-3" | 6'-10½" | 3'-3½" | 1.3 | h3 | 8'-6" | 22 | 60 |
| D24-1½ | 24" | 1½:1 | 2'-1" | 1'-4" | 2'-9" | 2'-11" | 7'-4½" | 3'-2" | 1.5 | h4 | 9'-3" | 22 | 60 |
| D24-2 | 24" | 2:1 | 2'-10" | 1'-4" | 2'-9" | 2'-11" | 8'-10½" | 4'-2½" | 2.0 | h5 | 11'-0" | 28 | 70 |
| D30-1½ | 30" | 1½:1 | 2'-6" | 1'-7" | 3'-3" | 3'-5" | 8'-8½" | 3'-9" | 2.0 | h6 | 11'-0" | 28 | 70 |
| D30-2 | 30" | 2:1 | 3'-4" | 1'-7" | 3'-3" | 3'-5" | 10'-4½" | 4'-11" | 2.6 | h7 | 13'-0" | 34 | 80 |
| D36-1½ | 36" | 1½:1 | 3'-0" | 1'-10" | 3'-10" | 4'-1" | 10'-4½" | 4'-5½" | 2.6 | h8 | 13'-3" | 30 | 80 |
| D36-2 | 36" | 2:1 | 4'-0" | 1'-10" | 3'-10" | 4'-1" | 12'-4½" | 5'-10½" | 3.5 | h9 | 15'-6" | 40 | 100 |
| | | | | | | | | | | | | | |
| | | | | | | | | | | | | | |

Note:
Class-X-Concrete shall be used throughout.

* If embankment slope above headwall is flatter than 2:1, provide wings for 2:1 slope.

OCT. 5 1959
EXAMINED
ENGINEER OF BRIDGE & TRAFFIC STRUCTURES
PASSED
ENGINEER OF DESIGN
APPROVED
CHIEF HIGHWAY ENGINEER

M. Miller Sign's. Rev. Nov. 58

REINFORCED CONCRETE HEADWALLS
FOR
15"-18"-24"-30" & 36" DIAMETER
PIPE CULVERTS
AT RIGHT ANGLES WITH ROADWAY

STANDARD 1976

HIGHWAY STANDARD 2136

STATE OF ILLINOIS
DEPARTMENT OF TRANSPORTATION

FOR INFORMATION ONLY

SCALE: | SHEET | OF | SHEETS | STA. | TO STA.

| F.A.I. RTE. | SECTION | COUNTY | TOTAL SHEETS | SHEET NO. |
|---|---|---|---|---|
| 57 | (38-4,38-5)RS,BRR,CLV | IROQUOIS | 213 | 194 |

ILLINOIS FED. AID PROJECT | CONTRACT NO. 66H62

Long Section Number

USER NAME = Joseph.Zeigler
PLOT SCALE = 100.000 ' / in.
PLOT DATE = 12/15/2023

| DESIGNED | - | REVISED | - |
|---|---|---|---|
| DRAWN | - | REVISED | - |
| CHECKED | - | REVISED | - |
| DATE | - | REVISED | - |

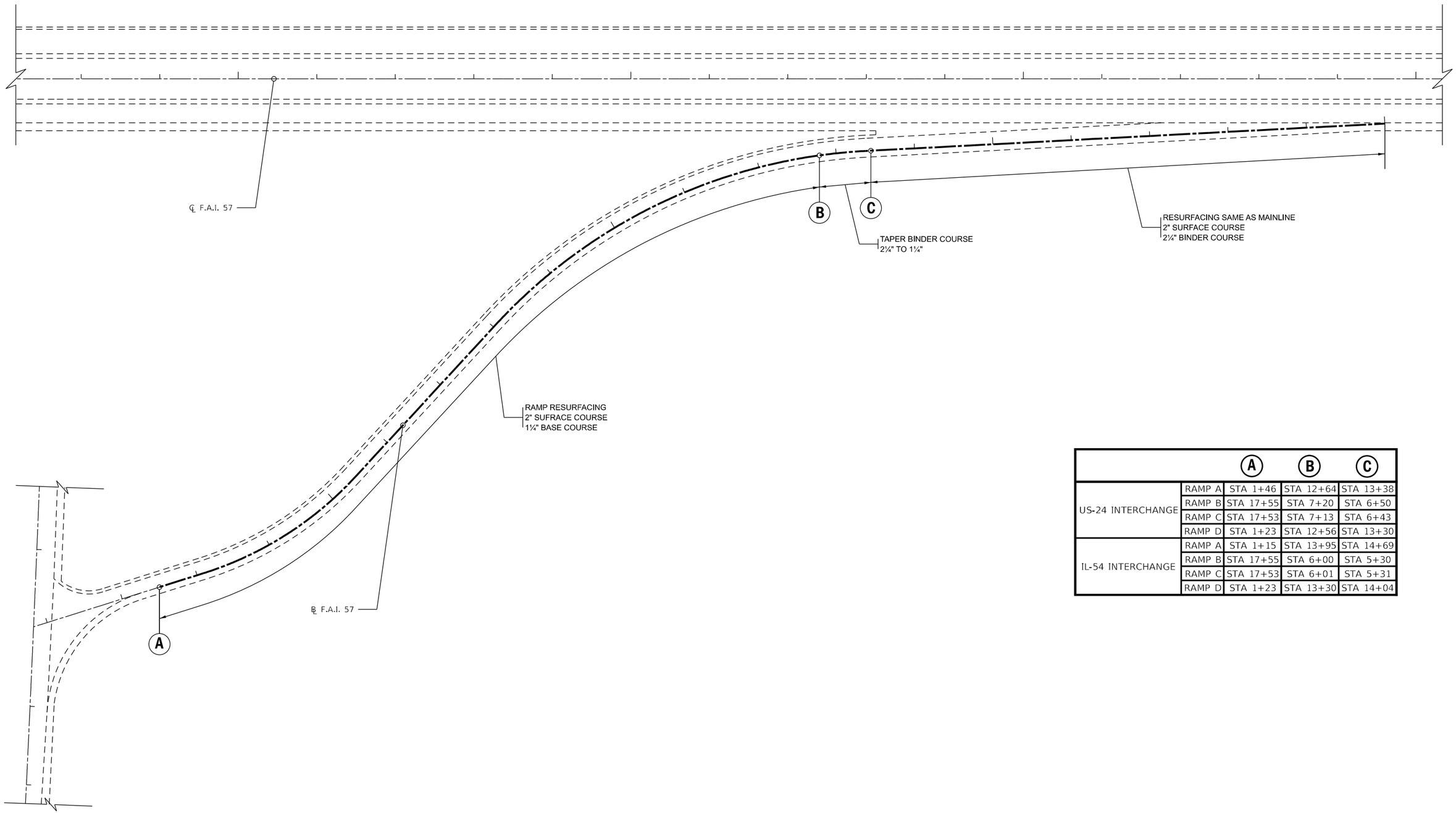


| | | A | B | C |
|---|---|---|---|---|
| US-24 INTERCHANGE | RAMP A | STA 1+46 | STA 12+64 | STA 13+38 |
| | RAMP B | STA 17+55 | STA 7+20 | STA 6+50 |
| | RAMP C | STA 17+53 | STA 7+13 | STA 6+43 |
| | RAMP D | STA 1+23 | STA 12+56 | STA 13+30 |
| IL-54 INTERCHANGE | RAMP A | STA 1+15 | STA 13+95 | STA 14+69 |
| | RAMP B | STA 17+55 | STA 6+00 | STA 5+30 |
| | RAMP C | STA 17+53 | STA 6+01 | STA 5+31 |
| | RAMP D | STA 1+23 | STA 13+30 | STA 14+04 |

**NOT TO SCALE**

MODEL: Default
FILE NAME: pw://ildot-pw.bentley.com:PWIDOT/Documents/IDOT Offices/District 3/ORD Projects/D386H62/CADData/CADsheets/D386H62-details

| | | | |
|---|---|---|---|
| USER NAME = Joseph.Zagar | DESIGNED - | REVISED - | |
| | DRAWN - | REVISED - | |
| PLOT SCALE = 100.000 ' / in. | CHECKED - | REVISED - | |
| PLOT DATE = 12/15/2023 | DATE - | REVISED - | |

**STATE OF ILLINOIS**
**DEPARTMENT OF TRANSPORTATION**

**RAMP DETAILS**

SCALE: | SHEET OF SHEETS | STA. TO STA.

| F.A.I. RTE. | SECTION | COUNTY | TOTAL SHEETS | SHEET NO. |
|---|---|---|---|---|
| 57 | (38-6,38-5)RS,BRR,CLV | IROQUOIS | 213 | 195 |

CONTRACT NO. 66H62

ILLINOIS | FED. AID PROJECT

Long Section Number

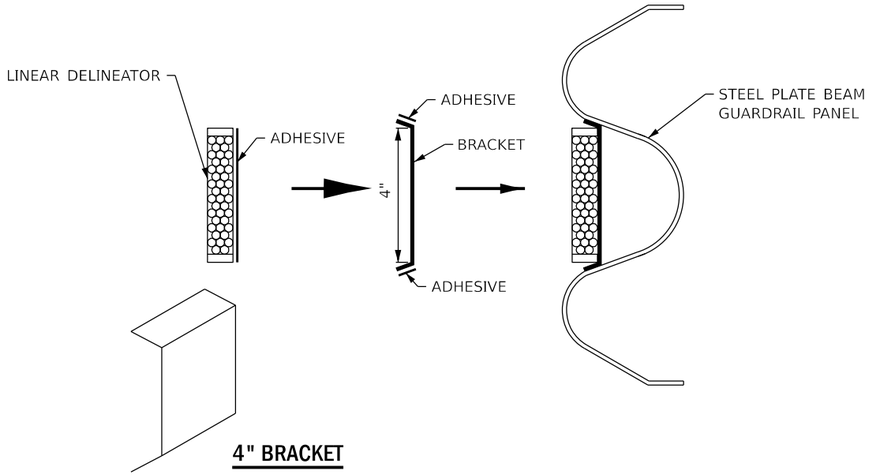


## LINEAR DELINEATOR APPLICATION TO STANDARD GALVANIZED GUARDRAIL

LINEATOR DELINEATOR SHALL BE APLLIED
ACCORDING TO THE MANUFACTURER'S RECOMMENDATIONS

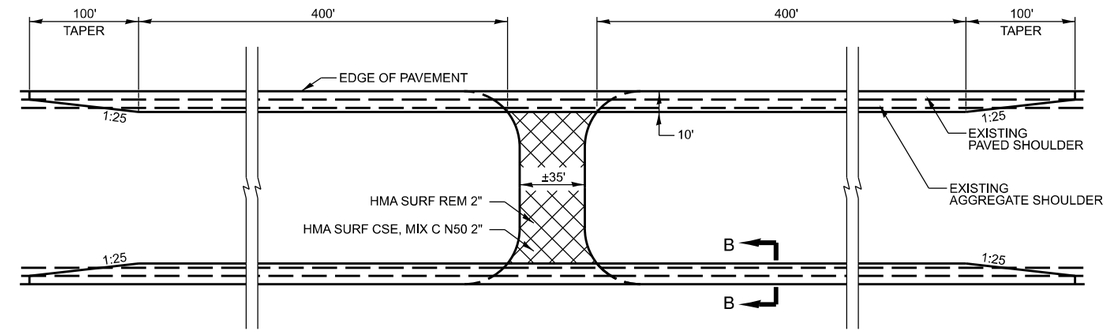


## SHOULDER WIDENING AT MAINTENANCE CROSSOVERS

STA 847+00

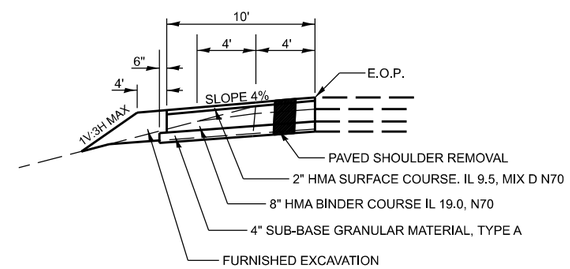


## SECTION B-B

NOTES

1.) OMIT RUMBLE STRIPS ON SHOULDERS WITHIN THESE LIMITS.

2.) REMOVAL OF EXISTING AGGREGATE SHOULDERS IS INCIDENTAL TO THE COST OF THE PROPOSED 8" HMA BINDER COURSE.

MODEL: Default
FILE NAME: c:\pw_work\pwidot\zapark\d0874886\D36H62-details.dgn

| | | | |
|---|---|---|---|
| USER NAME = Joseph.Zagar | DESIGNED - | REVISED - | STATE OF ILLINOIS DEPARTMENT OF TRANSPORTATION |
| | DRAWN - | REVISED - | |
| PLOT SCALE = 100.000 ' / in. | CHECKED - | REVISED - | |
| PLOT DATE = 12/15/2023 | DATE - | REVISED - | |

MAINTENANCE CROSSOVER DETAILS

SCALE: | SHEET OF SHEETS | STA. TO STA.

| F.A.I. RTE. | SECTION | COUNTY | TOTAL SHEETS | SHEET NO. |
|---|---|---|---|---|
| 57 | (38-6,38-5)RS,BRR,CLV | IROQUOIS | 213 | 196 |
| | | 66H62 | | |
| | ILLINOIS | FED. AID PROJECT | | |

# IDENTIFICATION OF ROADSIDE HAZARDS FOR TWO-LANE ROADWAYS

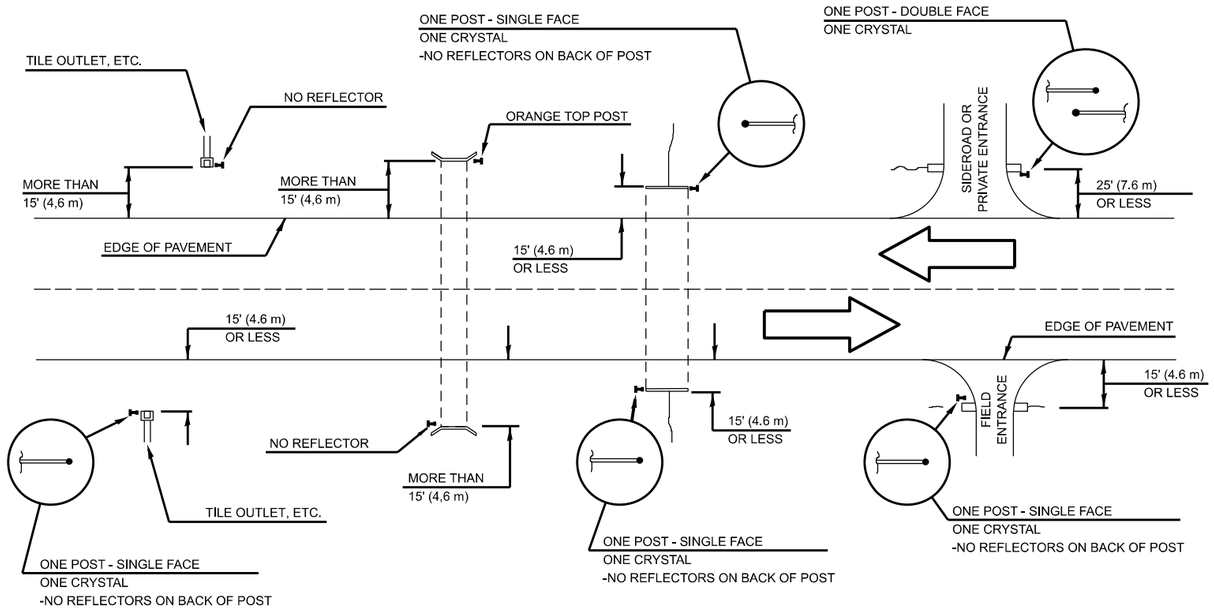


# MEDIAN DELINEATORS AT CROSSOVER

(FOR INTERSTATES, EXPRESSWAYS, DUAL HIGHWAYS)

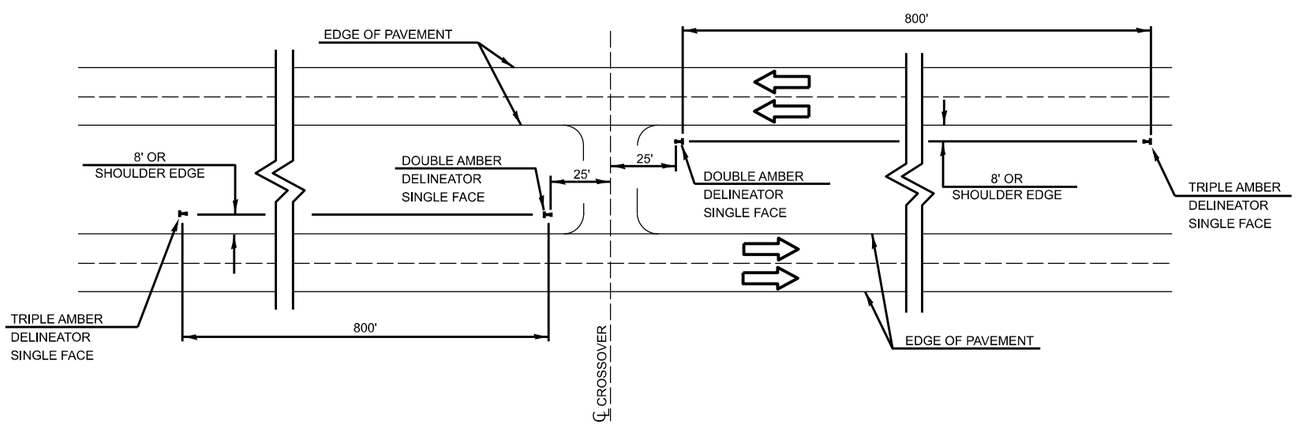


# BILL OF MATERIALS

| DELINEATOR TYPE | SINGLE FACE | DOUBLE FACE | NO REFLECTOR | TOTAL DELINEATORS |
|---|---|---|---|---|
| SINGLE CRYSTAL | | | N/A | |
| | | | | |
| | | | | |
| | | | | |
| | | | | |
| | | | | |
| NO REFLECTOR | | | TOTAL | |

NOTE:

DELINEATORS FOR ROADSIDE HAZARDS SHALL ONLY BE PLACED AT LOCATIONS WHERE THERE IS NO GUARDRAIL, OR OTHER PERMANENT BARRIER, ON THE SAME SIDE OF THE ROAD AS THE HAZZARD.

DELINEATORS FOR ROADSIDE HAZARDS SHALL ONLY BE PLACED AT LOCATIONS WHERE DELINEATORS ARE NOT IN PLACE ALONG THE EDGE OF SHOULDER.

EACH POST SHALL BE CONSIDERED AS ONE DELINEATOR FOR PAYMENT, REGUARDLESS OF THE NUMBER OF DELINEATORS ATTACHED TO IT.

FOR ONE-WAY AND INTERSTATE ROADWAYS THE APPLICATION SHALL BE SIMILAR WITH DELINEATORS PLACED ON THE TRAFFIC APPROACH SIDE OF HAZARDS AND OBJECTS, ONLY SINGLE FACE DELINEATORS WILL BE REQUIRED ON ONE-WAY ROADWAYS, CRYSTAL ON THE RIGHT SIDE AND AMBER ON THE LEFT SIDE.

FOR OTHER DELINEATOR APPLICATIONS, REFER TO HIGHWAY STANDARD 635001.

DESIGNER NOTE:
REMOTE OPENING FOR FILL CLOSURE.

MODEL: Default
FILE NAME: c:\pw_work\pwidot\zangrik\d0874886\D366ht62-details.dgn

| | | | |
|---|---|---|---|
| USER NAME = Joseph.Zagar | DESIGNED - | REVISED - | |
| | DRAWN - | REVISED - | |
| PLOT SCALE = 100,000 ' / in. | CHECKED - | REVISED - | |
| PLOT DATE = 12/15/2023 | DATE - | REVISED - | |

**STATE OF ILLINOIS**
**DEPARTMENT OF TRANSPORTATION**

**DELINEATOR PLACEMENT**

SCALE: SHEET OF SHEETS STA. TO STA.

| F.A.I. RTE. | SECTION | COUNTY | TOTAL SHEETS | SHEET NO. |
|---|---|---|---|---|
| 57 | (38-6,38-5)RS,BRR,CLV | IROQUOIS | 213 | 197 |
| | | 66H62 | | |

ILLINOIS FED. AID PROJECT

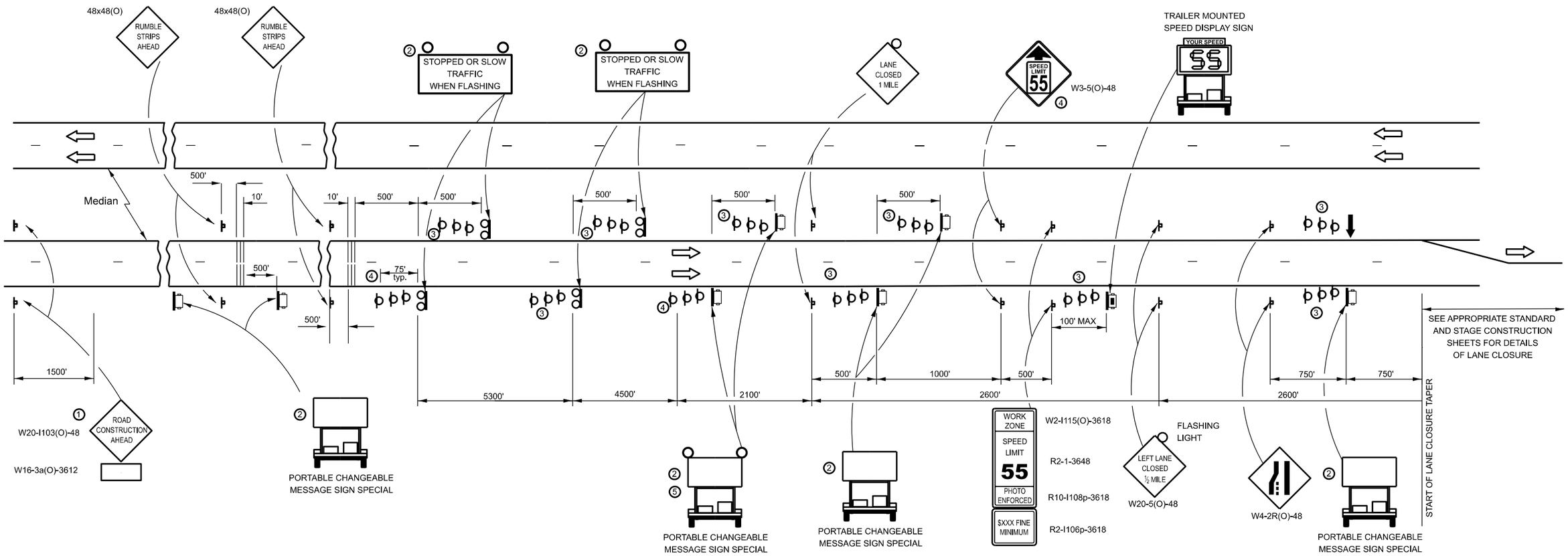


## NOTES:

1. THE ROAD CONSTRUCTION AHEAD SIGN SHALL BE LOCATED 5 MILES IN ADVANCE OF THE PROJECT LIMITS.
2. UNIT TO BE PAID FOR SEPARATELY. TO BE PLACED OUTSIDE OF EXISTING PAVED SHOULDER. ANY REQUIRED EARTHWORK INCLUDED IN THE COST OF THE UNIT.
3. THREE, TYPE II BARRICADES, DRUMS, OR VERTICAL BARRICADES AT 25' CENTERS.
4. THIS SIGN SHALL ONLY BE USED IF THE EXISTING SPEED LIMIT IS GREATHER THAN 65 MPH.
5. WHEN SHOWN, PORTABLE CHANGEABLE MESSAGE SIGN SPECIAL SHALL HAVE EQUIVALENT FLASHING BEACONS AS REAL TIME TRAFFIC CONTROL SIGNING. COST INCLUDED IN PORTABLE CHANGEABLE MESSAGE SIGN SPECIAL.

## LEGEND:

- ARROW BOARD
- PORTABLE CHANGEABLE MESSAGE SIGN SPECIAL (PCMS)
- SIGN
- REAL-TIME TRAFFIC CONTROL SIGNING
- TYPE II BARRICADE, DRUM, OR VERTICAL BARRICADE WITH MONODIRECTIONAL FLASHING LIGHT.
- TEMPORARY RUMBLE STRIPS (SPECIAL). SEE DETAIL & SPECIAL PROVISION
- SPEED DISPLAY TRAILER

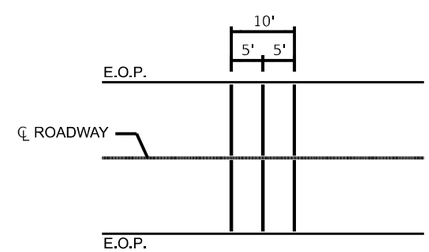


**TEMPORARY RUMBLE STRIP (SPECIAL)**

## GENERAL NOTE:

THIS STANDARD IS USED WHERE A LANE CLOSURE IS IN PLACE LONGER THAN ONE CONSECUTIVE WEEK OR INCLUDING A WEEKEND OR HOLIDAY AS DESCRIBED IN KEEPING ROADS OPEN TO TRAFFIC.

THE FIRST TWO SIGNS ARE STATIONARY. THE OTHER SIGNS, ARROWBOARDS AND MESSAGE BOARDS SHALL BE MOVED AS NECESSARY TO MAINTAIN THE REQUIRED DISTANCE FROM THE START OF THE LANE CLOSURE TAPER(S).

SEE SPECIAL PROVISIONS FOR SMART TRAFFIC MONITORING SYSTEM, PORTABLE CHANGEABLE MESSAGE SIGN SPECIAL AND CONTROL OF WORK.

THIS DETAIL APPLIES TO THE APPROACHES TO THE WORK ZONE IN BOTH DIRECTIONS.

WHEN THE RIGHT LANE IS CLOSED, RIGHT LANE CLOSED SIGNS SHALL BE SUBSTITUTED FOR LEFT LANE CLOSED SIGNS.

WHEN EXISTING SIGNS, POLES, AND OTHER ITEMS CONFLICT WITH LOCATING THE EQUIPMENT SHOWN, THE CONTRACTOR SHALL COORDINATE WITH THE ENGINEER TO DECONFLICT EQUIPMENT PLACEMENT.

ALL ORANGE SIGN SHEETING SHALL BE FLOURESCENT ORANGE MATERIAL.

DESIGNER NOTE:
USE IN PLACE OF HIGHWAY STANDARD 701400.
REQUIRES SPECIAL PROVISIONS FOR SMART TRAFFIC MONITORING SYTEM AND CONTROL OF WORK - SMART WORK ZONE.

MODEL: Default
FILE NAME: c:\pw_work\pwidot\zagarjk\d0874886\D366H62-details.dgn

| | | | |
|---|---|---|---|
| USER NAME = Joseph.Zagar | DESIGNED - | REVISED - | |
| | DRAWN - | REVISED - | |
| PLOT SCALE = 100.218 ' / in. | CHECKED - | REVISED - | |
| PLOT DATE = 12/15/2023 | DATE - | REVISED - | |

**STATE OF ILLINOIS**
**DEPARTMENT OF TRANSPORTATION**

**SMART ZONE WORK DETAIL**
**DETAIL**

SCALE: SHEET OF SHEETS STA. TO STA.

| F.A.I. RTE. | SECTION | COUNTY | TOTAL SHEETS | SHEET NO. |
|---|---|---|---|---|
| 57 | (38-6,38-5)RS,BRR,CLV | IROQUOIS | 213 | 198 |
| | | 66H62 | | |

ILLINOIS FED. AID PROJECT

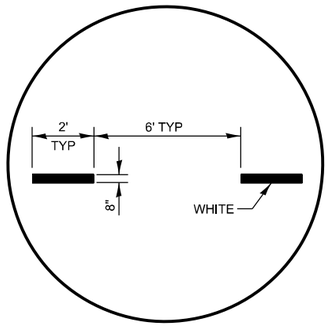


## INTERSTATE RAMP TRANSITION LINE

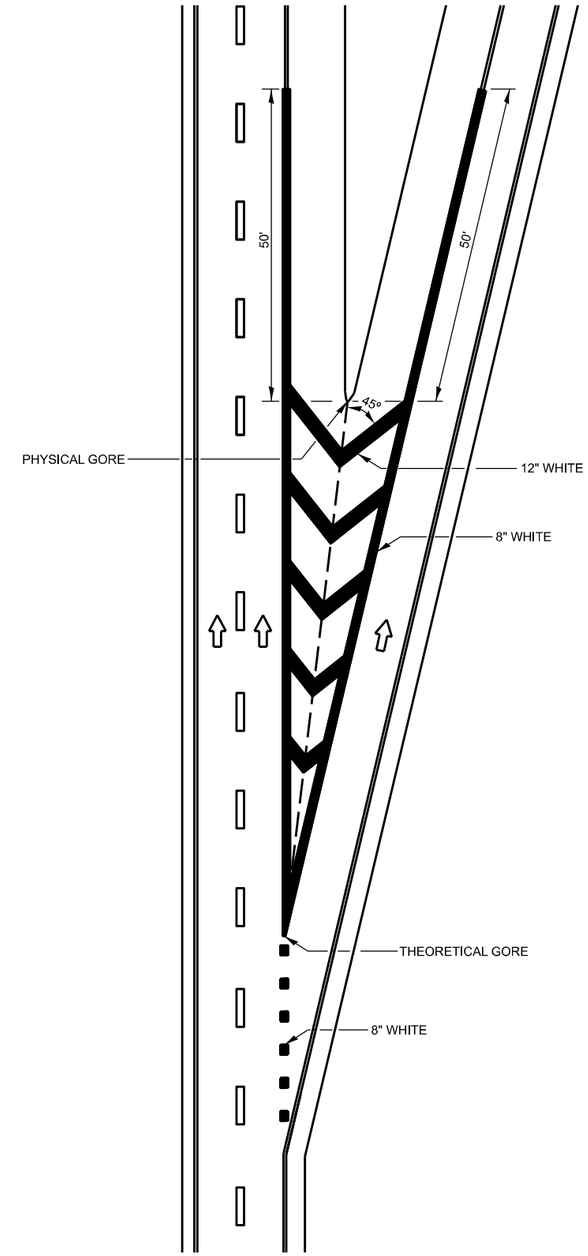


## EXIT RAMP GORE DETAIL

MODEL: Default
FILE NAME: c:\pw_work\pwidot\zagarjk\d0874886\D36H62-details.dgn

| | | | |
|---|---|---|---|
| USER NAME = Joseph.Zagar | DESIGNED - | REVISED - | |
| | DRAWN - | REVISED - | |
| PLOT SCALE = 100.218 ' / in. | CHECKED - | REVISED - | |
| PLOT DATE = 12/15/2023 | DATE - | REVISED - | |

**STATE OF ILLINOIS**
**DEPARTMENT OF TRANSPORTATION**

**PAVEMENT MARKING DETAIL**

SCALE: SHEET OF SHEETS STA. TO STA.

| F.A.I. RTE. | SECTION | COUNTY | TOTAL SHEETS | SHEET NO. |
|---|---|---|---|---|
| 57 | (38-6,38-5)RS,BRR,CLV | IROQUOIS | 213 | 199 |
| | | 66H62 | | |

ILLINOIS FED. AID PROJECT

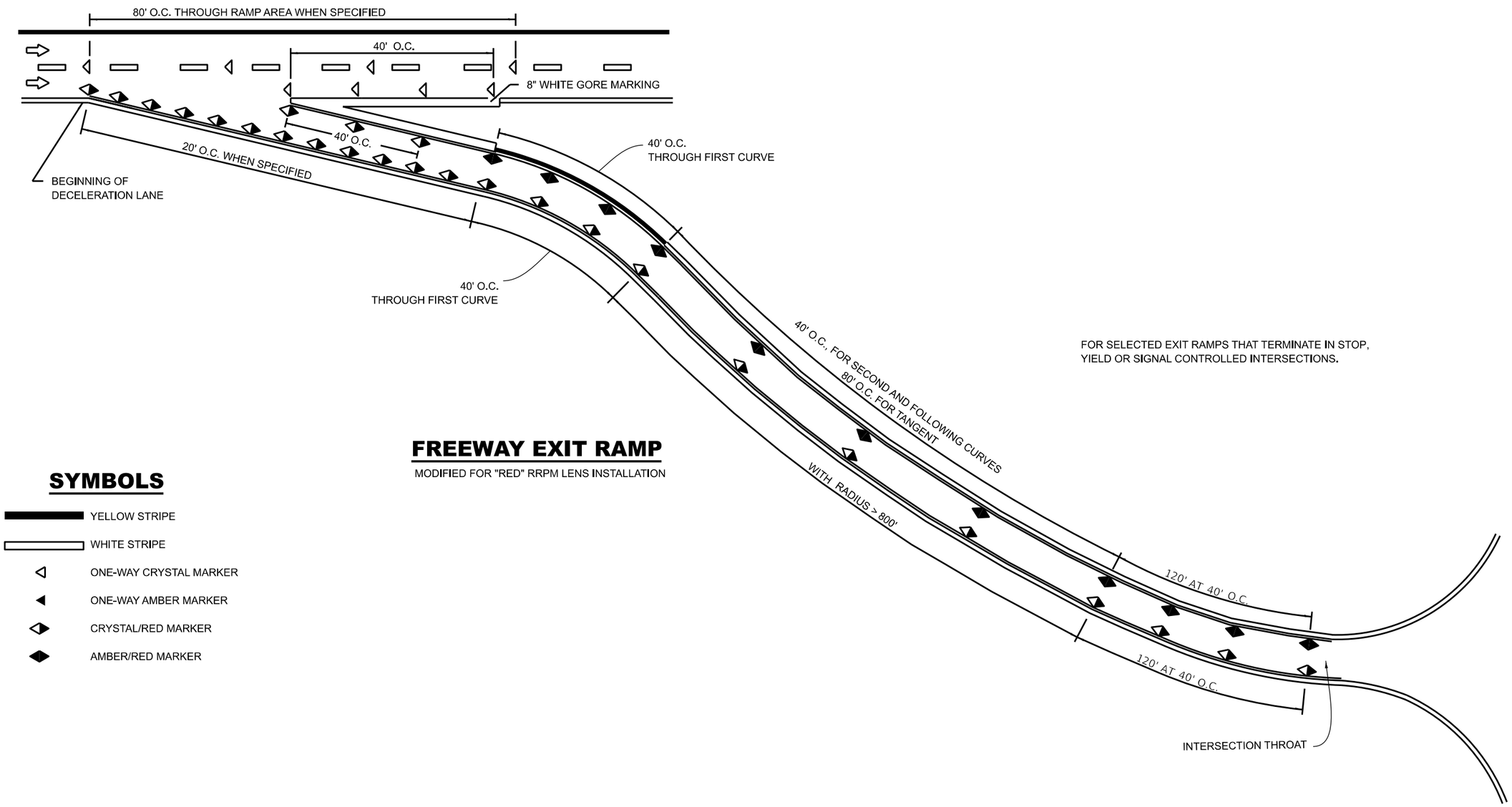


FOR SELECTED EXIT RAMPS THAT TERMINATE IN STOP, YIELD OR SIGNAL CONTROLLED INTERSECTIONS.

# FREEWAY EXIT RAMP

MODIFIED FOR "RED" RRPM LENS INSTALLATION

## SYMBOLS

- YELLOW STRIPE
- WHITE STRIPE
- ONE-WAY CRYSTAL MARKER
- ONE-WAY AMBER MARKER
- CRYSTAL/RED MARKER
- AMBER/RED MARKER

MODEL: Default
FILE NAME: c:\pw_work\pwidot\zagarjk\d0874886\D366H62-details.dgn

| | | | |
|---|---|---|---|
| USER NAME = Joseph.Zagar | DESIGNED - | REVISED - | STATE OF ILLINOIS DEPARTMENT OF TRANSPORTATION |
| | DRAWN - | REVISED - | |
| PLOT SCALE = 100.218 ' / in. | CHECKED - | REVISED - | |
| PLOT DATE = 12/15/2023 | DATE - | REVISED - | |

PAVEMENT MARKING DETAIL

SCALE: SHEET OF SHEETS STA. TO STA.

| F.A.I. RTE. | SECTION | COUNTY | TOTAL SHEETS | SHEET NO. |
|---|---|---|---|---|
| 57 | (38-6,38-5)RS,BRR,CLV | IROQUOIS | 213 | 200 |
| | | 66H62 | | |
| | ILLINOIS | FED. AID PROJECT | | |

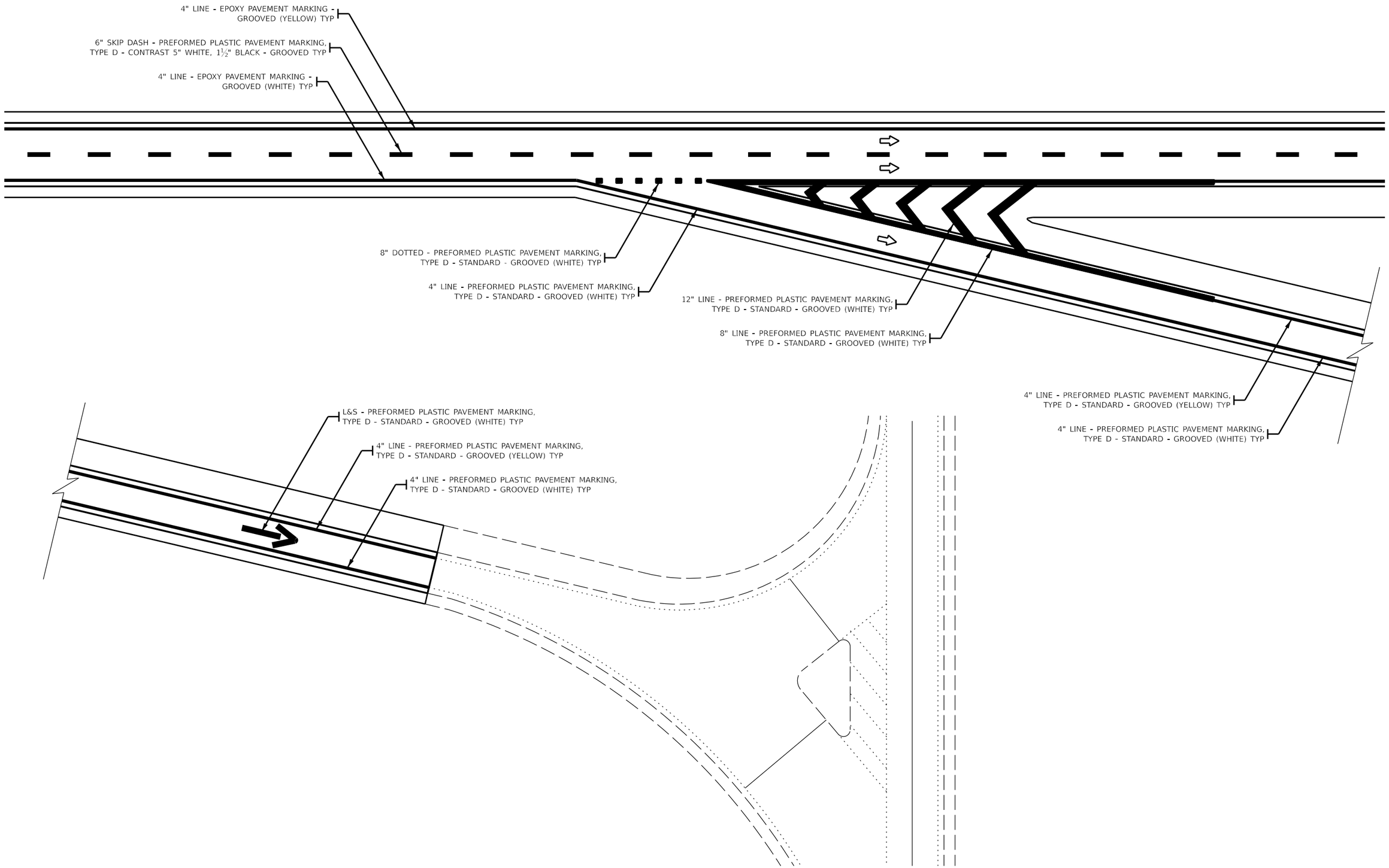


MODEL: Default
FILE NAME: c:\pw_work\pwidot\zagarjk\d0884020\66H62 PMK Detail.dgn

| | | | |
|---|---|---|---|
| USER NAME = Joseph.Zagar | DESIGNED - | REVISED - | |
| | DRAWN - | REVISED - | |
| PLOT SCALE = 100.218 ' / in. | CHECKED - | REVISED - | |
| PLOT DATE = 12/8/2023 | DATE - | REVISED - | |

**STATE OF ILLINOIS**
**DEPARTMENT OF TRANSPORTATION**

**PAVEMENT MARKING DETAIL**

SCALE: SHEET OF SHEETS STA. TO STA.

| F.A.I. RTE. | SECTION | COUNTY | TOTAL SHEETS | SHEET NO. |
|---|---|---|---|---|
| 57 | (38-6,38-5)RS,BRR,CLV | IROQUOIS | 213 | 201 |
| | | 66H62 | | |

ILLINOIS FED. AID PROJECT

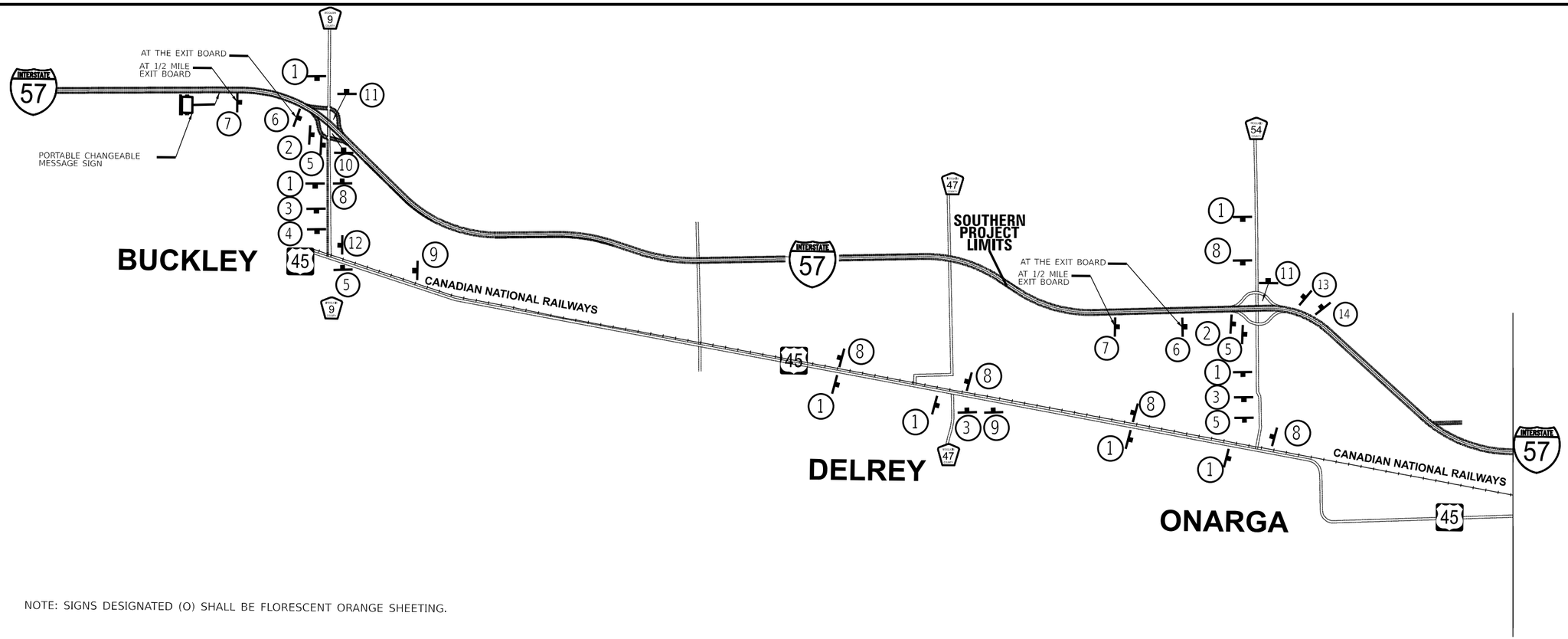


NOTE: SIGNS DESIGNATED (O) SHALL BE FLORESCENT ORANGE SHEETING.

| | | | | | | | | | | | | | |
|---|---|---|---|---|---|---|---|---|---|---|---|---|---|
| 1 | M4-1a(O) 24"X12" | 2 | M4-1a(O) 24"X12" | 3 | M4-1a(O) 24"X12" | 4 | M4-1a(O) 24"X12" | 5 | M4-1a(O) 24"X12" | 6 | M4-1a(O) 24"X12" | 7 | M4-1a(O) 24"X12" |
| | M3-1(BL) 24"X12" | | M3-1(BL) 24"X12" | | M3-1(BL) 24"X12" | | M3-1(BL) 24"X12" | | M3-1(BL) 24"X12" | | M3-1(BL) 24"X12" | | M3-1(BL) 24"X12" |
| | M1-1 24"X24" | | M1-1 24"X24" | | M1-1 24"X24" | | M1-1 24"X24" | | M1-1 24"X24" | | M1-1 24"X24" | | M1-1 24"X24" |
| | M6-3(O) 21"X15" | | M5-1(R)(O) 21"X15" | | M5-1(L)(O) 21"X15" | | M6-19(O) 21"X15" | | M6-1(O) 21"X15" | | M6-2(O) 21"X15" | | M5-2(R)(O) 21"X15" |

| | | | | | | | | | | | | | |
|---|---|---|---|---|---|---|---|---|---|---|---|---|---|
| 8 | M4-1a(O) 24"X12" | 9 | M4-1a(O) 24"X12" | 10 | M4-1a(O) 24"X12" | 11 | M4-1a(O) 24"X12" | 12 | M4-1a(O) 24"X12" | 13 | M4-1a(O) 24"X12" | 14 | M4-1a(O) 24"X12" |
| | M3-3(BL) 24"X12" | | M3-3(BL) 24"X12" | | M3-3(BL) 24"X12" | | M3-3(BL) 24"X12" | | M3-3(BL) 24"X12" | | M3-3(BL) 24"X12" | | M3-3(BL) 24"X12" |
| | M1-1 24"X24" | | M1-1 24"X24" | | M1-1 24"X24" | | M1-1 24"X24" | | M1-1 24"X24" | | M1-1 24"X24" | | M1-1 24"X24" |
| | M6-3(O) 21"X15" | | M5-1(R)(O) 21"X15" | | M5-1(L)(O) 21"X15" | | M6-19(O) 21"X15" | | M6-1(O) 21"X15" | | M6-2(O) 21"X15" | | M5-2(R)(O) 21"X15" |

MODEL: Default
FILE NAME: c:\pw_work\pwidot\zagarjk\d0874886\D366H62-details.dgn

| | | | |
|---|---|---|---|
| USER NAME = Joseph.Zagar | DESIGNED - | REVISED - | |
| | DRAWN - | REVISED - | |
| PLOT SCALE = 100.218 ' / in. | CHECKED - | REVISED - | |
| PLOT DATE = 12/15/2023 | DATE - | REVISED - | |

**STATE OF ILLINOIS**
**DEPARTMENT OF TRANSPORTATION**

**ALTERNATE ROUTE SIGNING DETAIL**

SCALE: | SHEET OF SHEETS | STA. TO STA.

| F.A.I RTE. | SECTION | COUNTY | TOTAL SHEETS | SHEET NO. |
|---|---|---|---|---|
| 57 | (38-6,38-5)RS,BRR,CLV | IROQUOIS | 213 | 202 |
| | | CONTRACT NO. 66H62 | | |
| | | ILLINOIS | FED. AID PROJECT | |

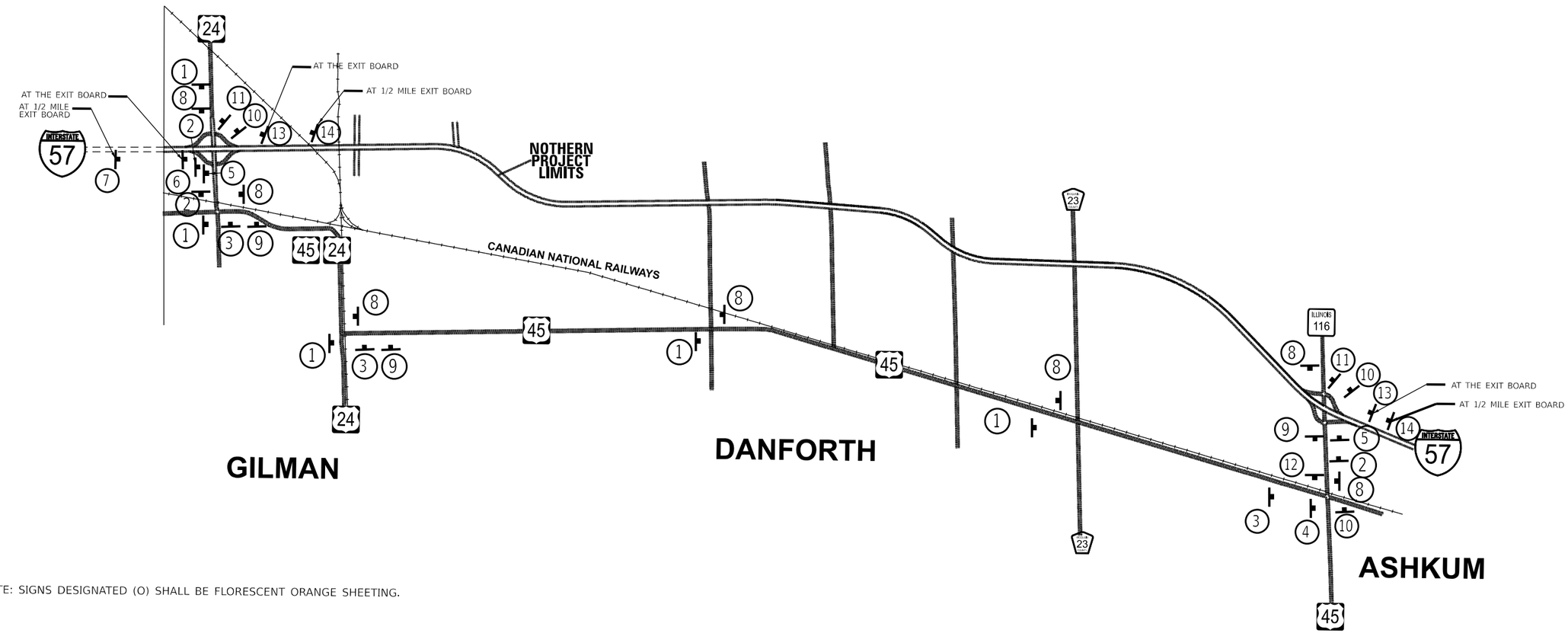


NOTE: SIGNS DESIGNATED (O) SHALL BE FLORESCENT ORANGE SHEETING.

| | | | | | | |
|---|---|---|---|---|---|---|
| 1 | 2 | 3 | 4 | 5 | 6 | 7 |
| ALT M4-1a(O) 24"X12" | ALT M4-1a(O) 24"X12" | ALT M4-1a(O) 24"X12" | ALT M4-1a(O) 24"X12" | ALT M4-1a(O) 24"X12" | ALT M4-1a(O) 24"X12" | ALT M4-1a(O) 24"X12" |
| NORTH M3-1(BL) 24"X12" | NORTH M3-1(BL) 24"X12" | NORTH M3-1(BL) 24"X12" | NORTH M3-1(BL) 24"X12" | NORTH M3-1(BL) 24"X12" | NORTH M3-1(BL) 24"X12" | NORTH M3-1(BL) 24"X12" |
| INTERSTATE 57 M1-1 24"X24" | INTERSTATE 57 M1-1 24"X24" | INTERSTATE 57 M1-1 24"X24" | INTERSTATE 57 M1-1 24"X24" | INTERSTATE 57 M1-1 24"X24" | INTERSTATE 57 M1-1 24"X24" | INTERSTATE 57 M1-1 24"X24" |
| M6-3(O) 21"X15" | M5-1(R)(O) 21"X15" | M5-1(L)(O) 21"X15" | M6-19(O) 21"X15" | M6-1(O) 21"X15" | M6-2(O) 21"X15" | M5-2(R)(O) 21"X15" |

| | | | | | | |
|---|---|---|---|---|---|---|
| 8 | 9 | 10 | 11 | 12 | 13 | 14 |
| ALT M4-1a(O) 24"X12" | ALT M4-1a(O) 24"X12" | ALT M4-1a(O) 24"X12" | ALT M4-1a(O) 24"X12" | ALT M4-1a(O) 24"X12" | ALT M4-1a(O) 24"X12" | ALT M4-1a(O) 24"X12" |
| SOUTH M3-3(BL) 24"X12" | SOUTH M3-3(BL) 24"X12" | SOUTH M3-3(BL) 24"X12" | SOUTH M3-3(BL) 24"X12" | SOUTH M3-3(BL) 24"X12" | SOUTH M3-3(BL) 24"X12" | SOUTH M3-3(BL) 24"X12" |
| INTERSTATE 57 M1-1 24"X24" | INTERSTATE 57 M1-1 24"X24" | INTERSTATE 57 M1-1 24"X24" | INTERSTATE 57 M1-1 24"X24" | INTERSTATE 57 M1-1 24"X24" | INTERSTATE 57 M1-1 24"X24" | INTERSTATE 57 M1-1 24"X24" |
| M6-3(O) 21"X15" | M5-1(R)(O) 21"X15" | M5-1(L)(O) 21"X15" | M6-19(O) 21"X15" | M6-1(O) 21"X15" | M6-2(O) 21"X15" | M5-2(R)(O) 21"X15" |

MODEL: Default
FILE NAME: c:\pw_work\pwidot\zagarjk\d0874886\D366H62-details.dgn

| | | | |
|---|---|---|---|
| USER NAME = Joseph.Zagar | DESIGNED - | REVISED - | |
| | DRAWN - | REVISED - | |
| PLOT SCALE = 100.218 ' / in. | CHECKED - | REVISED - | |
| PLOT DATE = 12/15/2023 | DATE - | REVISED - | |

**STATE OF ILLINOIS**
**DEPARTMENT OF TRANSPORTATION**

**ALTERNATE ROUTE SIGNING DETAIL**

SCALE: | SHEET OF SHEETS | STA. TO STA.

| F.A.I RTE. | SECTION | COUNTY | TOTAL SHEETS | SHEET NO. |
|---|---|---|---|---|
| 57 | (38-6,38-5)RS,BRR,CLV | IROQUOIS | 213 | 203 |
| | | CONTRACT NO. 66H62 | | |
| | ILLINOIS | FED. AID PROJECT | | |

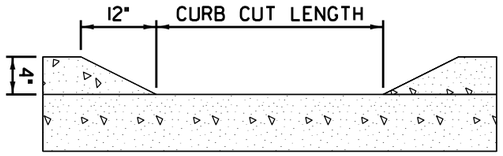


CURB CUT
PROFILE VIEW

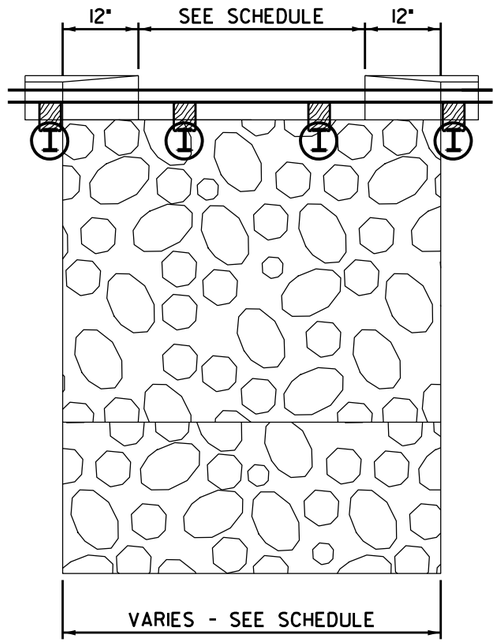


RIPRAP EMBANKMENT
PLAN VIEW

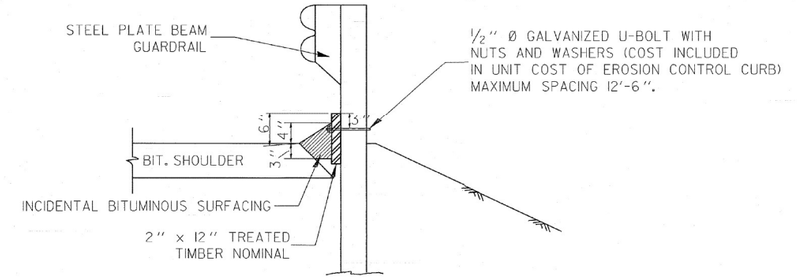


**SIDE VIEW**

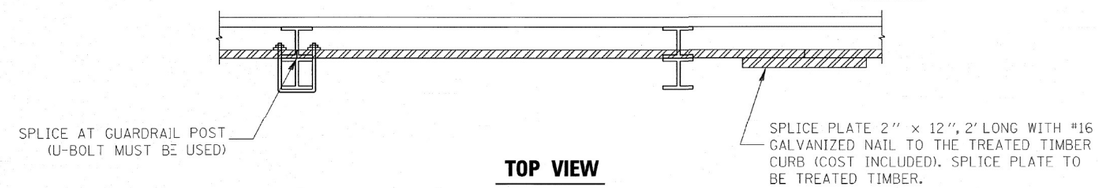


**TOP VIEW**

NOTE:
THE TREATED TIMBER SHALL BUTT TOGETHER AT THE GUARDRAIL POST OR SPLICED AS SHOWN ON THE DETAIL.

THE TREATED TIMBER SHALL BE TREATED IN ACCORDANCE TO ARTICLE 1007.12 AND ALL PRESERVATIVES SPECIFIED IN THE ARTICLE WILL BE ALLOWED.

THE PRICE FOR EROSION CONTROL CURB SHALL INCLUDE THE U-BOLTS ATTACHING THE TREATED TIMBER TO THE GUARDRAIL POSTS, TREATED TIMBER, AND THE NECESSARY GRADING TO COMPLETE THIS WORK.

INCIDENTAL BITUMINOUS SURFACING SHALL BE MEASURED AND PAID FOR AT CONTRACT UNIT PRICE PER TON FOR INCIDENTAL BITUMINOUS SURFACING.

THE EROSION CONTROL CURB SHALL BE MEASURED AND PAID FOR AT THE CONTRACT UNIT PRICE PER FOOT FOR EROSION CONTROL CURB.

STRUCTURE
BARRIER WALL

EXISTING EROSION CONTROL CURB
FOR INFORMATION ONLY

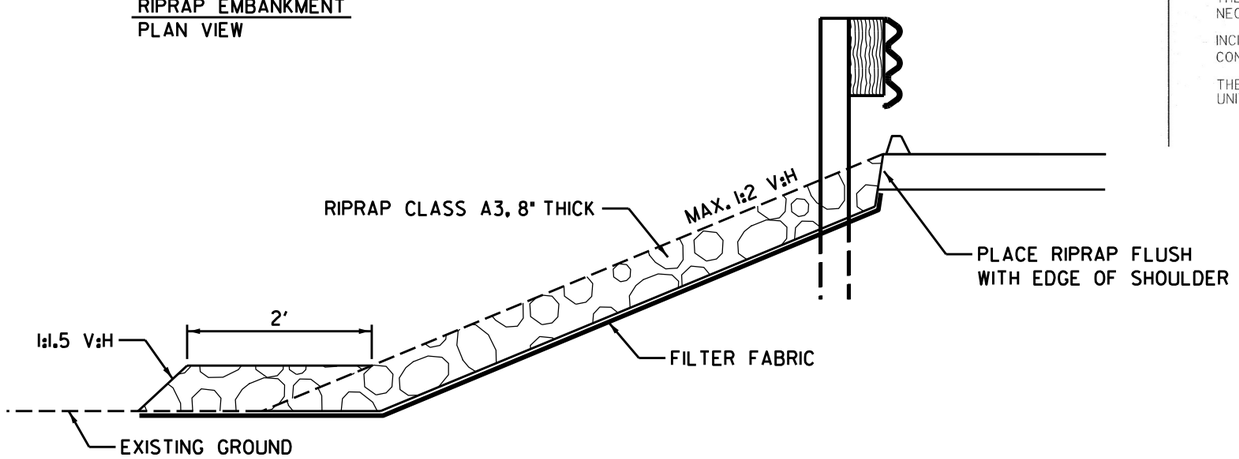


RIPRAP EMBANKMENT
PROFILE VIEW

NOT TO SCALE

MODEL: Default
FILE NAME: c:\pw_work\pwidot\zagarjk\d0874886\D366H62-details.dgn

| | | | |
|---|---|---|---|
| USER NAME = Joseph.Zagar | DESIGNED - | REVISED - | |
| | DRAWN - | REVISED - | |
| PLOT SCALE = 100.218 ' / in. | CHECKED - | REVISED - | |
| PLOT DATE = 12/15/2023 | DATE - | REVISED - | |

**STATE OF ILLINOIS**
**DEPARTMENT OF TRANSPORTATION**

**RIPRAP EMBANKMENT DETAILS**

SCALE: | SHEET OF SHEETS | STA. | TO STA.

| F.A.I. RTE. | SECTION | COUNTY | TOTAL SHEETS | SHEET NO. |
|---|---|---|---|---|
| 57 | (38-6,38-5)RS,BRR,CLV | IROQUOIS | 213 | 204 |
| | | 66H62 | | |
| | ILLINOIS | FED. AID PROJECT | | |

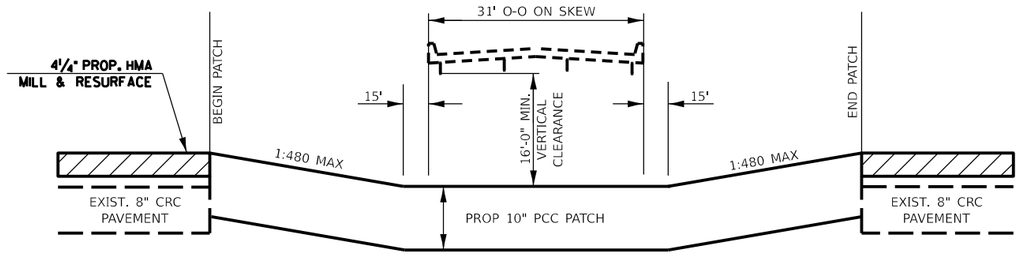


## TAPER DETAIL UNDER SN 038-0086

STA 536+00 TO STA 551+00 NB & SB

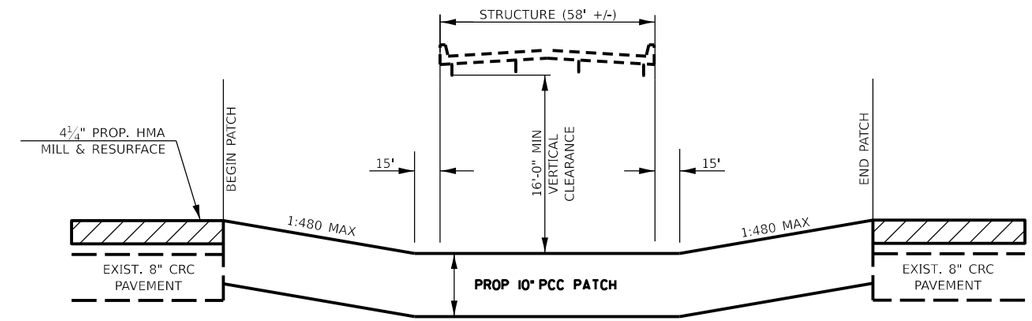


## TAPER DETAIL UNDER SN 038-0031

STA 644+00 TO STA 651+00 NB & SB

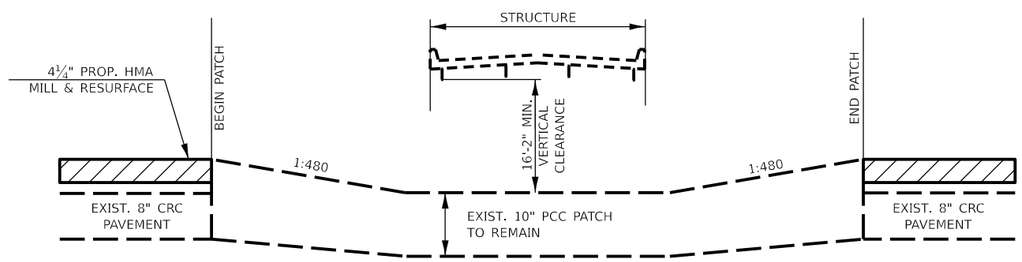


## TAPER DETAIL UNDER SN 038-0129

STA 705+60 TO STA 709+10 SB

STA 706+65 TO STA 710+15 NB

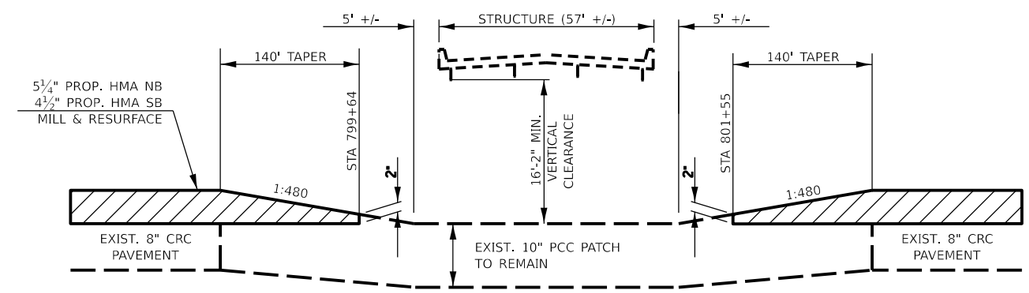


## TAPER DETAIL UNDER SN 038-0048

STA 798+24 TO STA 802+95 NB & SB

MODEL: Default
FILE NAME: pw://ildot-pw.bentley.com:PWIDOT/Documents/IDOT Offices/District 3/ORD Projects/D366H62/CADData/CADsheets/D366H62-details

| | | | |
|---|---|---|---|
| USER NAME = Joseph.Zagar | DESIGNED - | REVISED - | STATE OF ILLINOIS DEPARTMENT OF TRANSPORTATION |
| | DRAWN - | REVISED - | |
| PLOT SCALE = 100.218 ' / in. | CHECKED - | REVISED - | |
| PLOT DATE = 12/15/2023 | DATE - | REVISED - | |

**I-57 TAPER DETAILS**

SCALE: | SHEET OF SHEETS | STA. TO STA.

| F.A.I. RTE. | SECTION | COUNTY | TOTAL SHEETS | SHEET NO. |
|---|---|---|---|---|
| 57 | (38-6,38-5)RS,BRR,CLV | IROQUOIS | 213 | 205 |
| | | CONTRACT NO. 66H62 | | |
| | | ILLINOIS FED. AID PROJECT | | |

Long Section Number

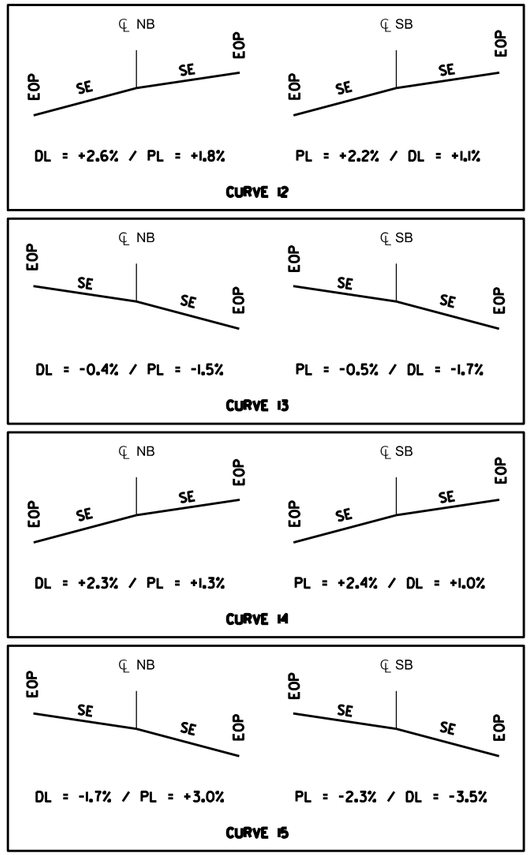


FIELD MEASUREMENTS AT
FULL SUPERELEVATION (E)
LOOKING SOUTH (DOWN STATION)

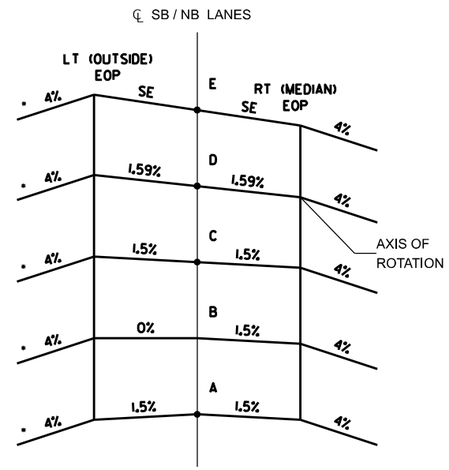


CROSS SECTION DIAGRAM
SUPERELEVATION TRANSITION

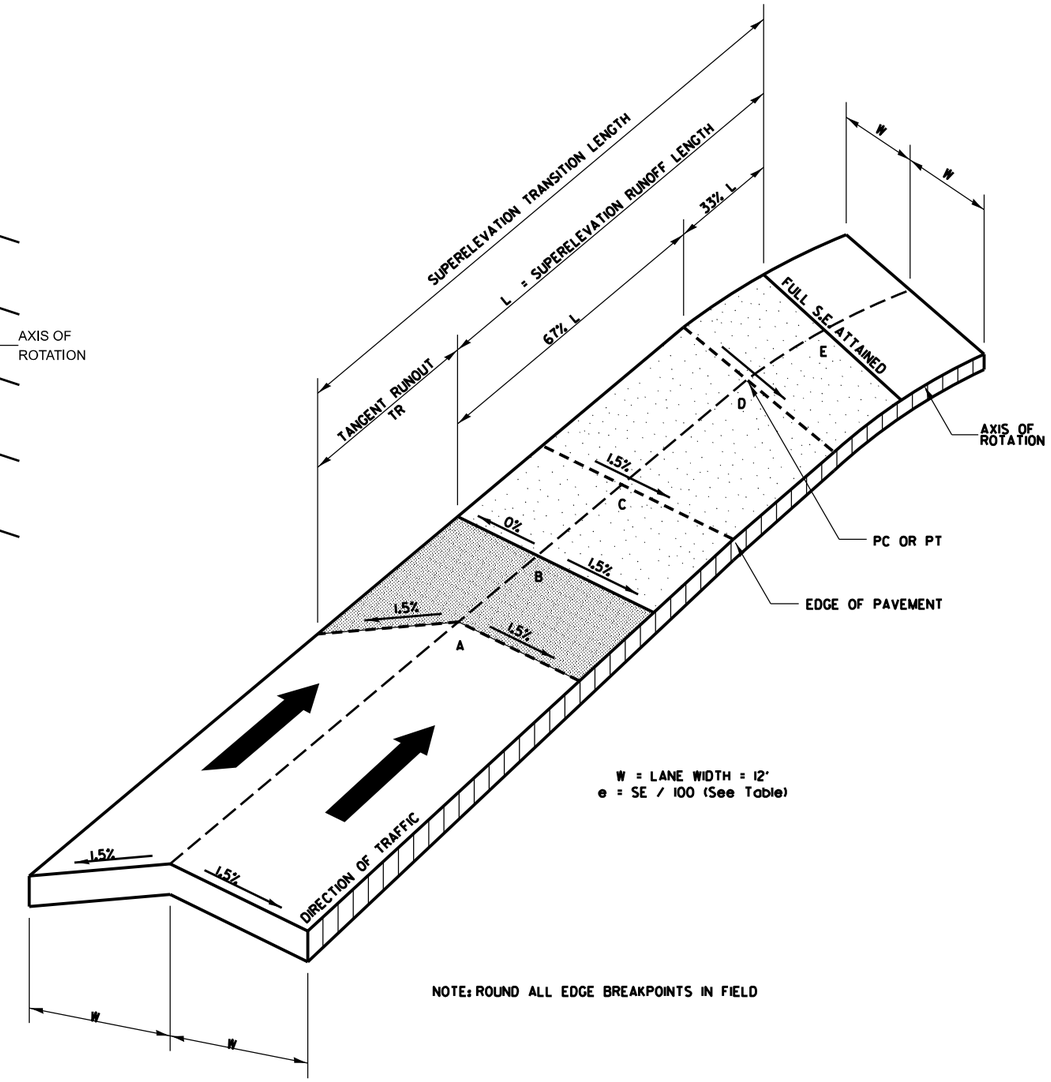


SUPERELEVATION TRANSITION

| Curve Number | Approaching/ Departing * | A | B | C | D | E | Design Superelevation Rate e (%) | Tangent Runout BDE 32 3.6 TRml | Superelevation Runoff BDE 32 3.E LML |
|---|---|---|---|---|---|---|---|---|---|
| 12 | A | 521+67.29 | 522+28.29 | 522+96.29 | 522+79.62 | 523+05.29 | 1.7% | 61 | 77 |
| | D | 552+63.69 | 552+02.69 | 551+34.69 | 551+51.36 | 551+25.69 | 1.7% | 61 | 77 |
| 13 | A | 667+47.78 | 668+82.78 | ** | 669+12.78 | 669+27.78 | 1.0% | 135 | 45 |
| | D | 713+79.67 | 712+44.67 | ** | 712+14.67 | 711+99.67 | 1.0% | 135 | 45 |
| 14 | A | 765+96.79 | 766+57.79 | 767+25.79 | 767+09.12 | 767+34.79 | 1.7% | 61 | 77 |
| | D | 797+41.81 | 796+80.81 | 796+12.81 | 796+29.48 | 796+03.81 | 1.7% | 61 | 77 |
| 15 | A | 869+90.64 | 870+36.64 | 871+04.64 | 871+20.64 | 871+62.64 | 2.8% | 46 | 126 |
| | D | 907+20.46 | 906+74.46 | 906+06.46 | 905+90.46 | 905+48.46 | 2.8% | 46 | 126 |

MODEL: Default
FILE NAME: pw://ildot-pw.bentley.com:PWIDOT/Documents/IDOT Offices/District 3/ORD Projects/D369H62/CADData/CADsheets/D369H62-details

| | | | |
|---|---|---|---|
| USER NAME = Joseph.Zagar | DESIGNED - | REVISED - | |
| | DRAWN - | REVISED - | |
| PLOT SCALE = 100.218 ' / In. | CHECKED - | REVISED - | |
| PLOT DATE = 12/15/2023 | DATE - | REVISED - | |

STATE OF ILLINOIS
DEPARTMENT OF TRANSPORTATION

EXISTING I-57 TYPICAL SECTIONS
SUPERELEVATION DETAILS

SCALE: SHEET OF SHEETS STA. TO STA.

| F.A.I. RTE. | SECTION | COUNTY | TOTAL SHEETS | SHEET NO. |
|---|---|---|---|---|
| 57 | (38-6,38-5)RS,BRR,CLV | IROQUOIS | 213 | 206 |

CONTRACT NO. 66H62
ILLINOIS FED. AID PROJECT

Long Section Number

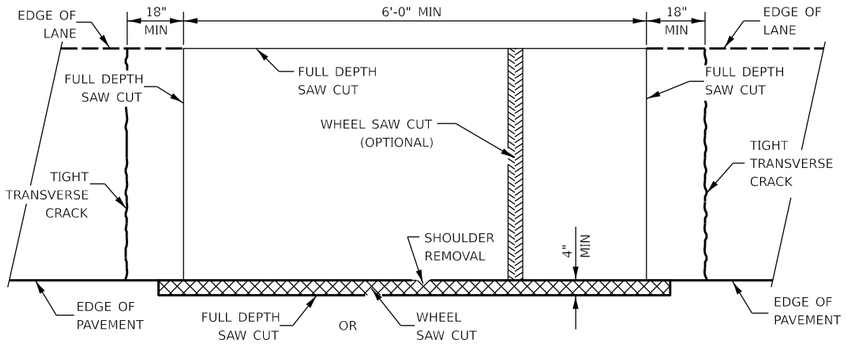


## PAVEMENT SAWING DETAIL

(HMA SHOULDER)

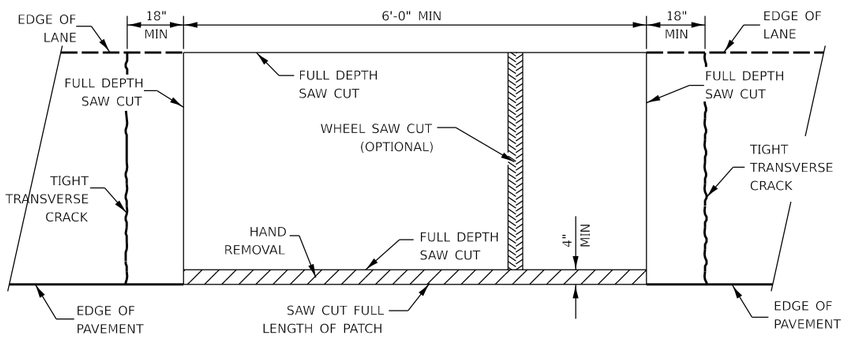


## PAVEMENT SAWING DETAIL

(PCC SHOULDER)

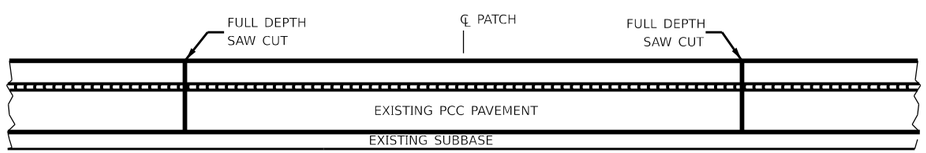


## EXISTING PAVEMENT WITHOUT HMA SURFACE

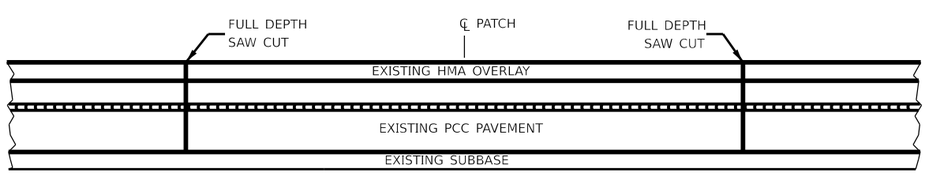


## EXISTING PAVEMENT WITH HMA SURFACE

## PAVEMENT SAWING DETAIL FOR CLASS A PATCHING (CRC PAVEMENT)

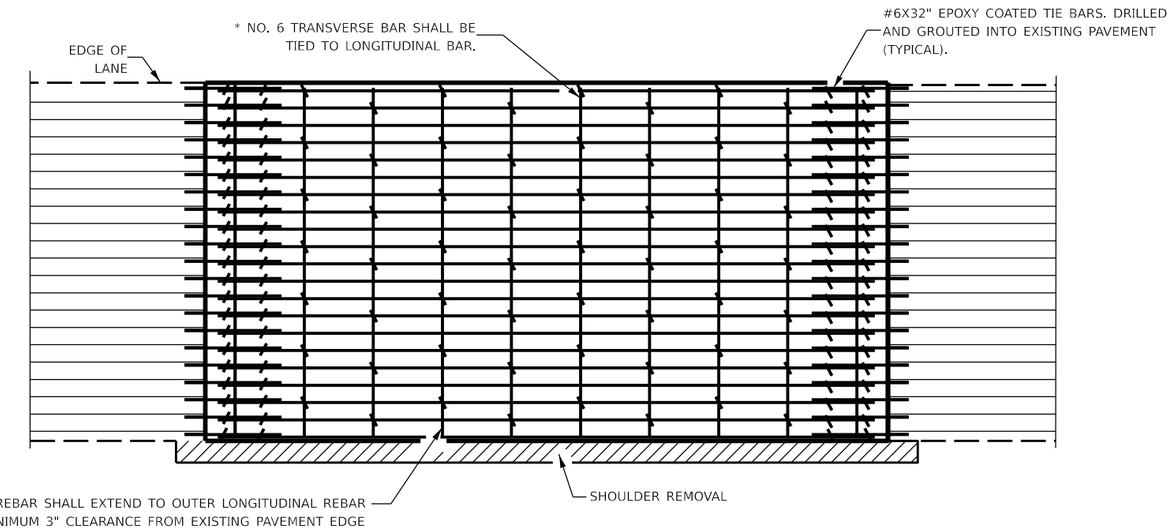


## PAVEMENT REINFORCEMENT DETAIL

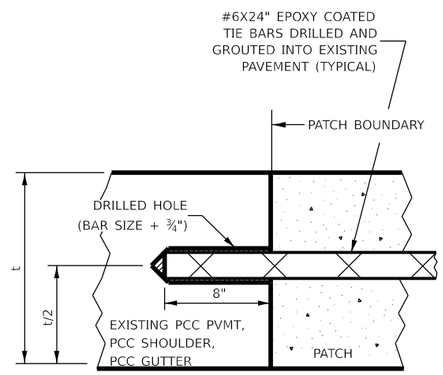


## LONGITUDINAL CONSTRUCTION JOINT

PATCHES MORE THAN 20' IN LENGTH SHALL BE TIED TO ADJACENT PAVEMENT, PCC SHOULDERS OR PCC CURB AND GUTTER WITH #6x24" EPOXY COATED TIE BARS AT 36" CENTERS.

NOTES:

- EXISTING LONGITUDINAL REINFORCEMENT SPACING; ±6".

SPACING OF NEW LONGITUDINAL REINFORCEMENT AND NEW LONGITUDINAL TIE BARS SHALL MATCH SPACING OF EXISTING REINFORCEMENT AND SHALL BE TIED TOGETHER WITH A MINIMUM OF TWO TIES PER BAR.

∗ EVERY THIRD INTERSECTION MUST BE TIED. WHEN THE MINIMUM CLEARANCE CANNOT BE OBTAINED WITH THE TRANSVERSE REBAR ON TOP, THEN THE TRANSVERSE REBAR SHALL BE TIED TO THE BOTTOM OF THE LONGITUDINAL REBAR.

∗∗ VARIABLE: WHERE $S_1$ AND $S_2$ ARE 2½" MIN. AND 12" MAX.

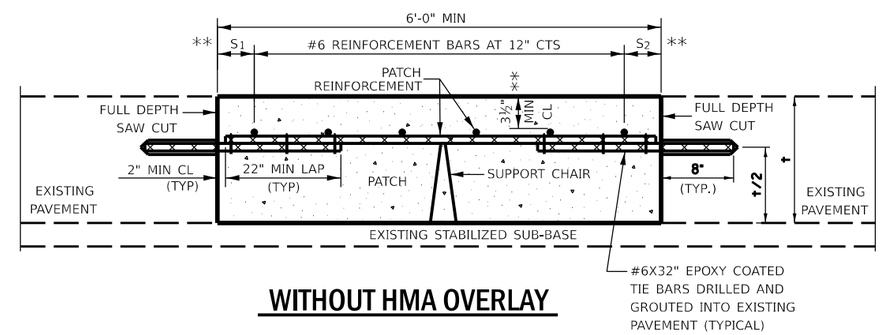


## WITHOUT HMA OVERLAY

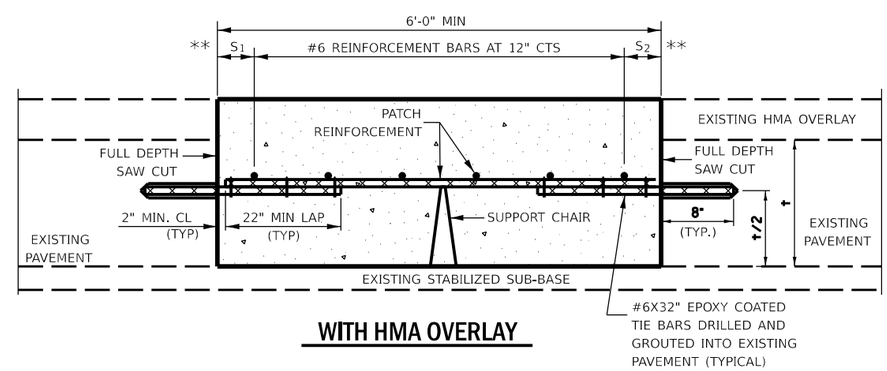


## WITH HMA OVERLAY

## PATCHING DETAIL FOR CLASS A PATCHING (CRC PAVEMENT)

SHEET 1 OF 2

| | | | |
|---|---|---|---|
| USER NAME = Joseph.Zagar | DESIGNED - | REVISED - | |
| | DRAWN - | REVISED - | |
| PLOT SCALE = 100.218 ' / in. | CHECKED - | REVISED - | |
| PLOT DATE = 12/15/2023 | DATE - | REVISED - | |

**STATE OF ILLINOIS**
**DEPARTMENT OF TRANSPORTATION**

# CLASS A PATCHING DETAILS

SCALE: | SHEET OF SHEETS | STA. TO STA.

| F.A.I. RTE. | SECTION | COUNTY | TOTAL SHEETS | SHEET NO. |
|---|---|---|---|---|
| 57 | (38-6,38-5)RS,BRR,CLV | IROQUOIS | 213 | 207 |

CONTRACT NO. 66H62

ILLINOIS | FED. AID PROJECT

Long Section Number

MODEL: Default
FILE NAME: pw://ildot-pw.bentley.com:PWIDOT/Documents/IDOT Offices/District 3/ORD Projects/D396H62/CADData/CADsheets/D396H62-details

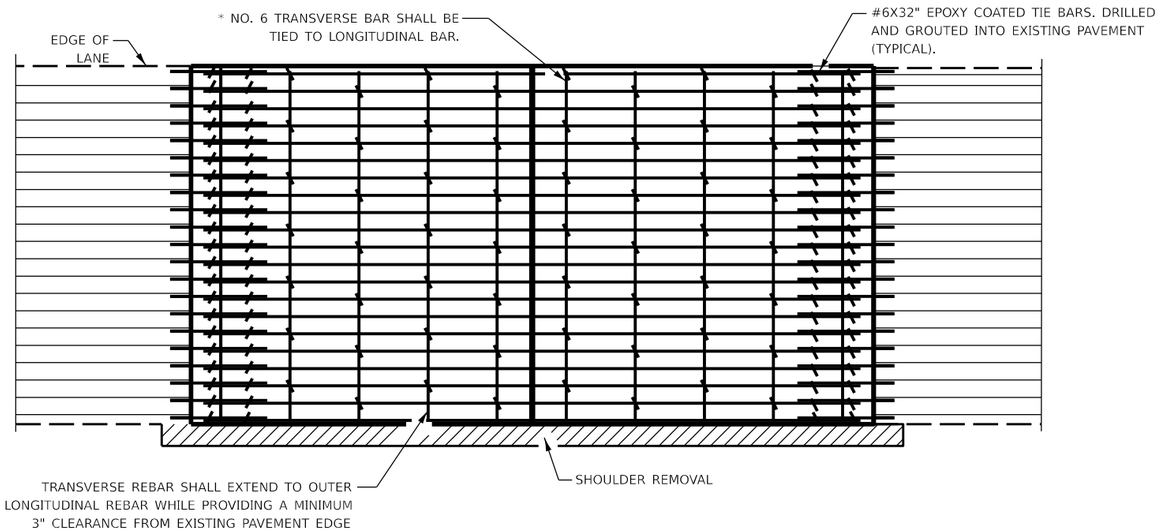


## PAVEMENT REINFORCEMENT DETAIL

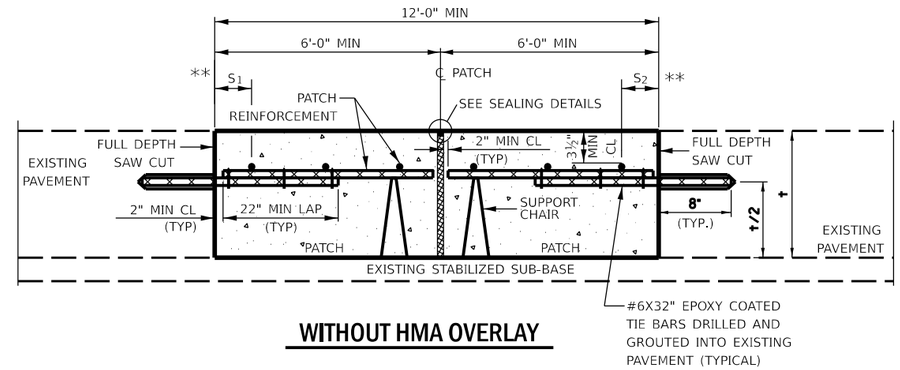


## WITHOUT HMA OVERLAY

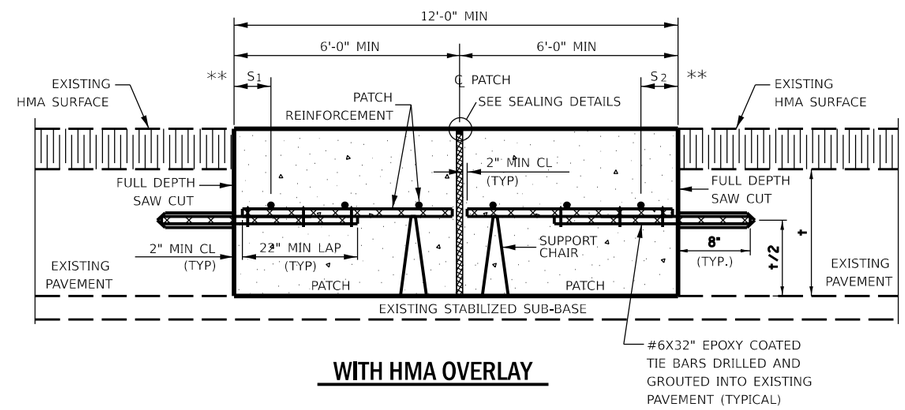


## WITH HMA OVERLAY

## CLASS A PATCH WITH EXPANSION JOINT

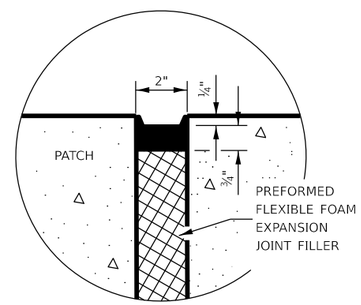


## SEALING DETAIL

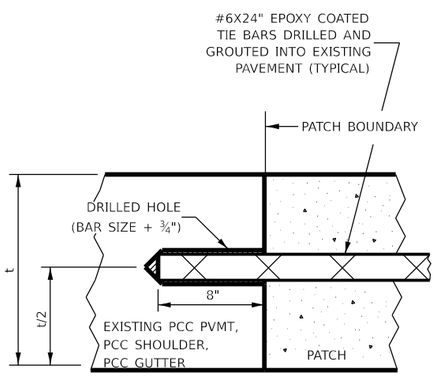


## LONGITUDINAL CONSTRUCTION JOINT

PATCHES MORE THAN 20' IN LENGTH SHALL BE TIED TO ADJACENT PAVEMENT, PCC SHOULDERS OR PCC CURB AND GUTTER WITH #6x24" EPOXY COATED TIE BARS AT 36" CENTERS.

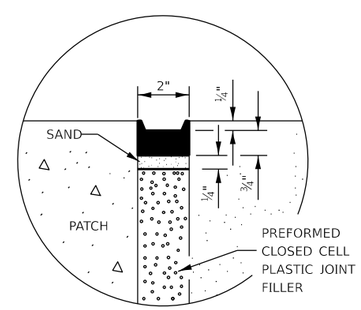


## SEALING DETAIL

NOTES:

- EXISTING LONGITUDINAL REINFORCEMENT SPACING; ±6".

  SPACING OF NEW LONGITUDINAL REINFORCEMENT AND NEW LONGITUDINAL TIE BARS SHALL MATCH SPACING OF EXISTING REINFORCEMENT AND SHALL BE TIED TOGETHER WITH A MINIMUM OF TWO TIES PER BAR.

* EVERY THIRD INTERSECTION MUST BE TIED. WHEN THE MINIMUM CLEARANCE CANNOT BE OBTAINED WITH THE TRANSVERSE REBAR ON TOP, THEN THE TRANSVERSE REBAR SHALL BE TIED TO THE BOTTOM OF THE LONGITUDINAL REBAR.

** VARIABLE: WHERE $S_1$ AND $S_2$ ARE 2½" MIN. AND 12" MAX.



| | | | |
|---|---|---|---|
| USER NAME = Joseph.Zagar | DESIGNED - | REVISED - | STATE OF ILLINOIS DEPARTMENT OF TRANSPORTATION |
| | DRAWN - | REVISED - | |
| PLOT SCALE = 100.218 ' / in. | CHECKED - | REVISED - | |
| PLOT DATE = 12/15/2023 | DATE - | REVISED - | |

CLASS A PATCHING DETAILS

SCALE: SHEET OF SHEETS STA. TO STA.

| F.A.I. RTE. | SECTION | COUNTY | TOTAL SHEETS | SHEET NO. |
|---|---|---|---|---|
| 57 | (38-6,38-5)RS,BRR,CLV | IROQUOIS | 213 | 208 |
| | | CONTRACT NO. 66H62 | | |
| | | ILLINOIS FED. AID PROJECT | | |

Long Section Number

MODEL: Default
FILE NAME: pw://ildot-pw.bentley.com:PWIDOT/Documents/IDOT Offices/District 3/CRD Projects/D396H62/CADData/CADsheets/D396H62-details

12.0" Radius, 2.0" Border, White on Green;
"EXIT", E 2K 120% spacing; " 283", E 2K;

12.0" Radius, 2.0" Border, White on Green;
"Gilman", E Mod 2K; "Chatsworth", E Mod 2K; "1 MILE", E 2K;
Table of letter and object lefts

24

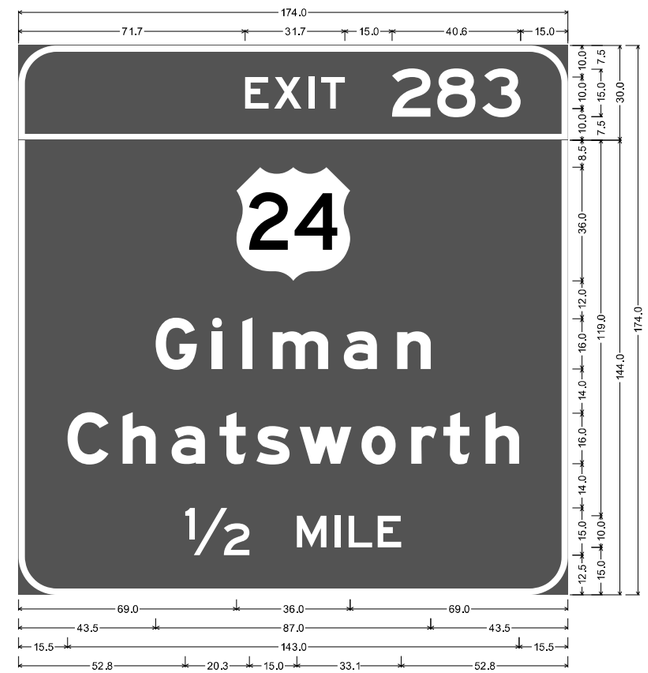


12.0" Radius, 2.0" Border, White on Green;
"EXIT", E 2K 120% spacing; " 283", E 2K;

12.0" Radius, 2.0" Border, White on Green;
"Gilman", E Mod 2K; "Chatsworth", E Mod 2K; "½ MILE", E 2K;
Table of letter and object lefts

24

*DIMENSIONS SHOWN ARE IN INCHES UNLESS OTHERWISE NOTED

MODEL: Default
FILE NAME: pw://ildot-pw.bentley.com:PWIDOT/Documents/IDOT Offices/District 3/ORD Projects/D386H62/CAD Data/CAD sheets/D386H62-details

| | | | |
|---|---|---|---|
| USER NAME = Cody.M.Johnson | DESIGNED - | REVISED - | |
| | DRAWN - | REVISED - | |
| PLOT SCALE = 100.000 ' / in. | CHECKED - | REVISED - | |
| PLOT DATE = 12/18/2023 | DATE - | REVISED - | |

**STATE OF ILLINOIS**
**DEPARTMENT OF TRANSPORTATION**

**SIGN DETAILS**

SCALE: SHEET OF SHEETS STA. TO STA.

| F.A.I. RTE. | SECTION | COUNTY | TOTAL SHEETS | SHEET NO. |
|---|---|---|---|---|
| 57 | (38-6,38-5)RS,BRR,CLV | IROQUOIS | 213 | 209 |
| | | CONTRACT NO. 66H62 | | |
| | | ILLINOIS | FED. AID PROJECT | |

Long Section Number

12.0" Radius, 2.0" Border, White on Green;
"EXIT", E 2K 120% spacing; " 283", E 2K;

12.0" Radius, 2.0" Border, White on Green;
"Gilman", E Mod 2K; "Chatsworth", E Mod 2K; Arrow 160 - 35.0" 45°;
Table of letter and object lefts

24

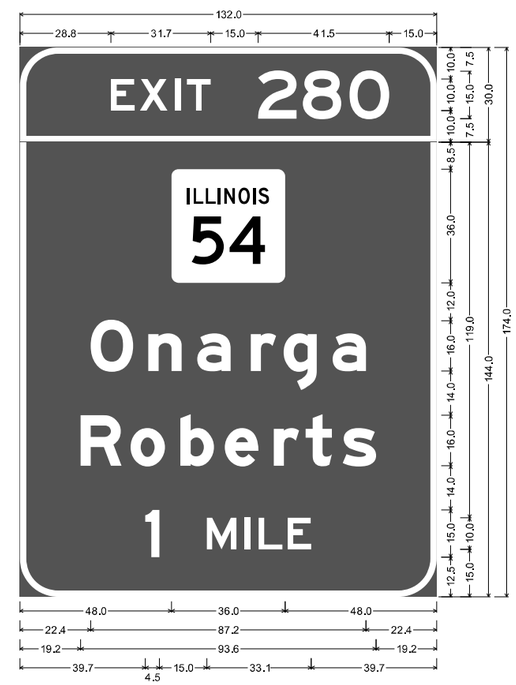


12.0" Radius, 2.0" Border, White on Green;
"EXIT", E 2K 120% spacing; " 280", E 2K;

12.0" Radius, 2.0" Border, White on Green;
"Onarga", E Mod 2K; "Roberts", E Mod 2K; "1 MILE", E 2K;
Table of letter and object lefts

*DIMENSIONS SHOWN ARE IN INCHES UNLESS OTHERWISE NOTED

MODEL: Default
FILE NAME: pw://ildot-pw.bentley.com:PWIDOT/Documents/IDOT Offices/District 3/ORD Projects/D386H62/CADData/CADsheets/D386H62-details

| | | | |
|---|---|---|---|
| USER NAME = Cody.M.Johnson | DESIGNED - | REVISED - | |
| | DRAWN - | REVISED - | |
| PLOT SCALE = 100.000 ' / in. | CHECKED - | REVISED - | |
| PLOT DATE = 12/18/2023 | DATE - | REVISED - | |

**STATE OF ILLINOIS**
**DEPARTMENT OF TRANSPORTATION**

**SIGN DETAILS**

SCALE: | SHEET OF SHEETS | STA. TO STA.

| F.A.I. RTE. | SECTION | COUNTY | TOTAL SHEETS | SHEET NO. |
|---|---|---|---|---|
| 57 | (38-6,38-5)RS,BRR,CLV | IROQUOIS | 213 | 210 |
| | | CONTRACT NO. 66H62 | | |
| | | ILLINOIS | FED. AID PROJECT | |

Long Section Number

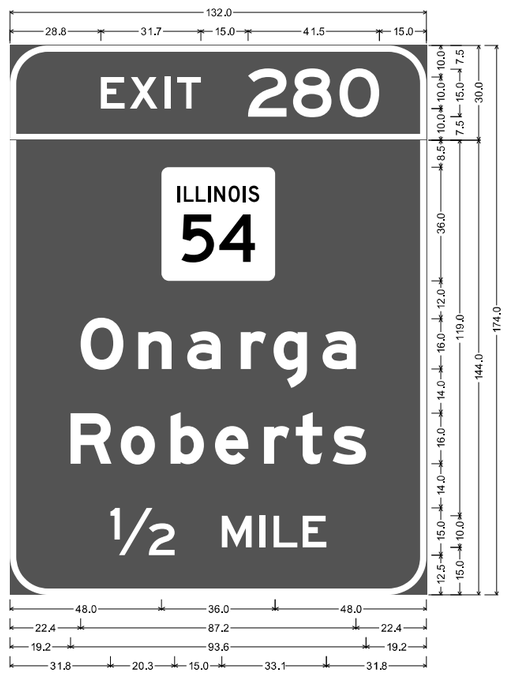


12.0" Radius, 2.0" Border, White on Green;
"EXIT", E 2K 120% spacing; " 280", E 2K;

12.0" Radius, 2.0" Border, White on Green;
"Onarga", E Mod 2K; "Roberts", E Mod 2K; "½ MILE", E 2K;
Table of letter and object lefts

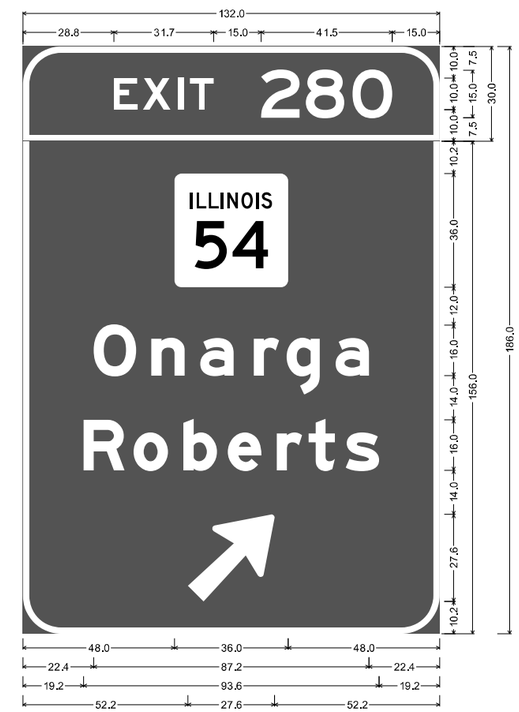


12.0" Radius, 2.0" Border, White on Green;
"EXIT", E 2K 120% spacing; " 280", E 2K;

12.0" Radius, 2.0" Border, White on Green;
"Onarga", E Mod 2K; "Roberts", E Mod 2K; Arrow 160 - 35.0" 45°;
Table of letter and object lefts

*DIMENSIONS SHOWN ARE IN INCHES UNLESS OTHERWISE NOTED

MODEL: Default
FILE NAME: pw://ildot-pw.bentley.com:PWIDOT/Documents/IDOT Offices/District 3/ORD Projects/D396H62/CADData/CADsheets/D396H62-details

| | | | |
|---|---|---|---|
| USER NAME = Cody.M.Johnson | DESIGNED - | REVISED - | |
| | DRAWN - | REVISED - | |
| PLOT SCALE = 100.000 ' / in. | CHECKED - | REVISED - | |
| PLOT DATE = 12/18/2023 | DATE - | REVISED - | |

**STATE OF ILLINOIS**
**DEPARTMENT OF TRANSPORTATION**

**SIGN DETAILS**

SCALE: | SHEET OF SHEETS | STA. | TO STA.

| F.A.I. RTE. | SECTION | COUNTY | TOTAL SHEETS | SHEET NO. |
|---|---|---|---|---|
| 57 | (38-6,38-5)RS,BRR,CLV | IROQUOIS | 213 | 211 |
| | | CONTRACT NO. 66H62 | | |
| | ILLINOIS | FED. AID PROJECT | | |

Long Section Number

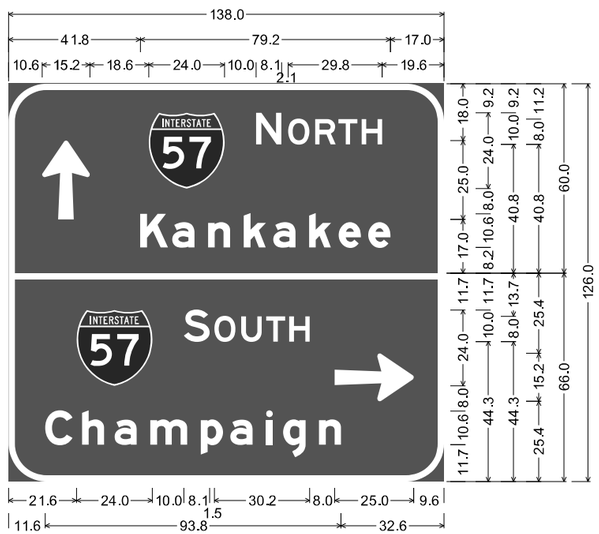


12.0" Radius, 2.0" Border, White on Green;
Arrow 80 - 25.0" 90°; "NORTH", E 2K;
"Kankakee", E Mod 2K;

12.0" Radius, 2.0" Border, White on Green;
"SOUTH", E 2K; "Champaign", E Mod 2K;
Arrow 80 - 25.0" 0°;
Table of letter and object lefts

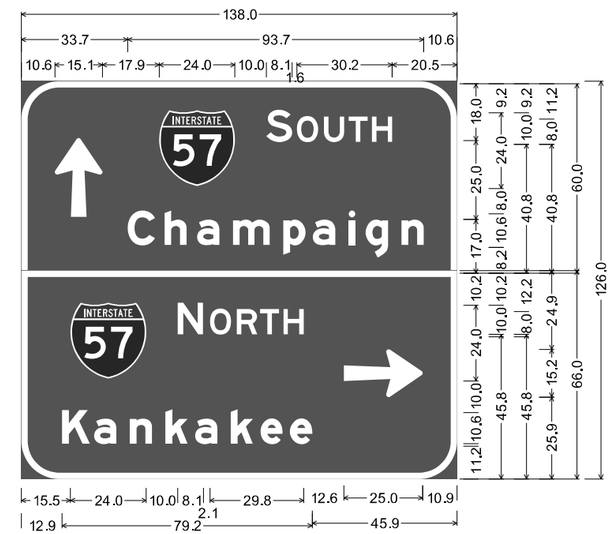


12.0" Radius, 2.0" Border, White on Green;
Arrow 80 - 25.0" 90°; "SOUTH", E 2K;
"Champaign", E Mod 2K;

12.0" Radius, 2.0" Border, White on Green;
"NORTH", E 2K; "Kankakee", E Mod 2K;
Arrow 80 - 25.0" 0°;
Table of letter and object lefts

*DIMENSIONS SHOWN ARE IN INCHES UNLESS OTHERWISE NOTED

MODEL: Default
FILE NAME: pw://ildot-pw.bentley.com:PWIDOT/Documents/IDOT Offices/District 3/ORD Projects/D398H62/CAD Data/CADsheets/D398H62-details

| | | | |
|---|---|---|---|
| USER NAME = Cody.M.Johnson | DESIGNED - | REVISED - | |
| | DRAWN - | REVISED - | |
| PLOT SCALE = 100.000 ' / in. | CHECKED - | REVISED - | |
| PLOT DATE = 12/18/2023 | DATE - | REVISED - | |

**STATE OF ILLINOIS**
**DEPARTMENT OF TRANSPORTATION**

**SIGN DETAILS**

SCALE: SHEET OF SHEETS STA. TO STA.

| F.A.I. RTE. | SECTION | COUNTY | TOTAL SHEETS | SHEET NO. |
|---|---|---|---|---|
| 57 | (38-6,38-5)RS,BRR,CLV | IROQUOIS | 213 | 212 |

CONTRACT NO. 66H62

ILLINOIS | FED. AID PROJECT

Long Section Number

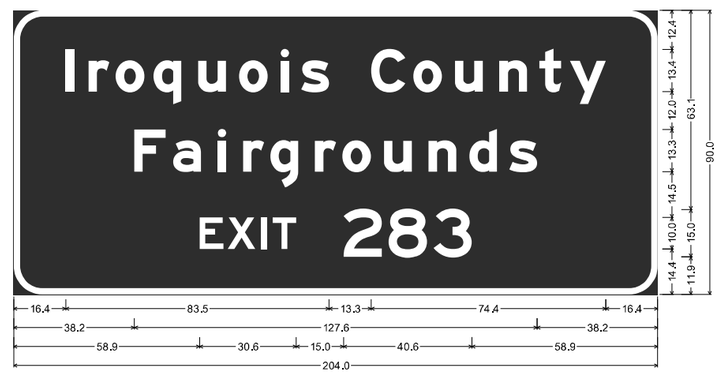


9.0" Radius, 2.0" Border, White on Brown;
"Iroquois County", E Mod 2K; "Fairgrounds", E Mod 2K; "EXIT", E 2K; "283", E 2K;

*DIMENSIONS SHOWN ARE IN INCHES UNLESS OTHERWISE NOTED

MODEL: Default
FILE NAME: pw://ildot-pw.bentley.com:PWIDOT/Documents/IDOT Offices/District 3/ORD Projects/D366H62/CADData/CADsheets/D366H62-details

| | | | |
|---|---|---|---|
| USER NAME = Cody.M.Johnson | DESIGNED - | REVISED - | STATE OF ILLINOIS DEPARTMENT OF TRANSPORTATION |
| | DRAWN - | REVISED - | |
| PLOT SCALE = 100.000 ' / in. | CHECKED - | REVISED - | |
| PLOT DATE = 12/18/2023 | DATE - | REVISED - | |

**SIGN DETAILS**

SCALE: SHEET OF SHEETS STA. TO STA.

| F.A.I. RTE. | SECTION | COUNTY | TOTAL SHEETS | SHEET NO. |
|---|---|---|---|---|
| 57 | (38-6,38-5)RS,BRR,CLV | IROQUOIS | 213 | 213 |
| | | CONTRACT NO. 66H62 | | |
| | | ILLINOIS | FED. AID PROJECT | |

Long Section Number