F.A.P. RTE.	SECTION	COUNTY	TOTAL SHEETS	SHEET NO.
343	*	COOK	283	143
STA.		TO STA.		
FED. ROAD DIST. NO. 1		ILLINOIS	FED. AID PROJECT	

* 70D-Y-R & 70HB-R-1 62897

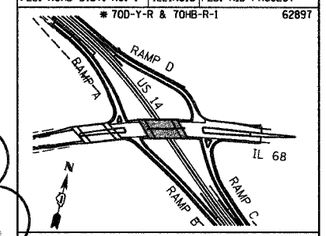

KEY PLAN

NOTES

1. ROUTE 14 UNDERPASS LUMINAIRES SHALL BE MOUNTED 4.9m ABOVE THE SHOULDER. REFER TO DRAWING BE-900 FOR SUSPENDED MOUNT UNDERPASS LUMINAIRE DETAILS.

2. UPRR UNDERPASS LUMINAIRES SHALL BE MOUNTED 7.0M ABOVE GRADE. REFER TO DRAWING BE-902 FOR WALL MOUNT UNDERPASS LUMINAIRE DETAILS.

3. FUSE KITS AND GROUND WIRE SPLICE SHALL BE INCLUDED IN THE PAY ITEM FOR THE JUNCTION BOX.

4. ALL UNDERPASS LIGHTING CONDUITS ARE ATTACHED TO STRUCTURE.

5. CONDUIT SLEEVE ENTERS THROUGH THE BOTTOM OF THE JUNCTION BOX FOR US ROUTE 14, CONDUIT SLEEVE ENTERS THROUGH THE BACK OF THE JUNCTION BOX FOR UPRR.

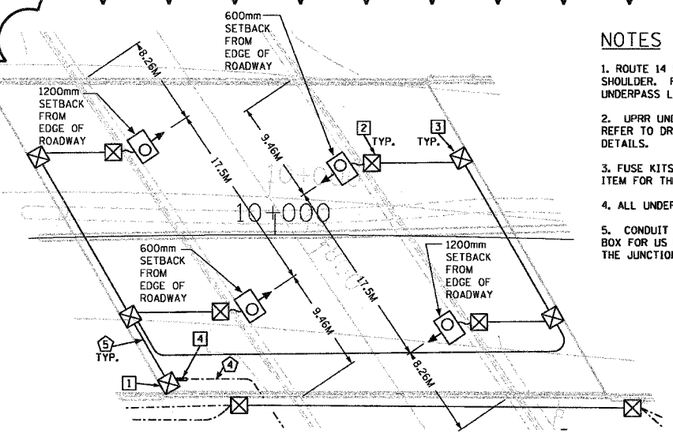

1 UNDERPASS LUMINAIRE WIRING DETAIL
US ROUTE 14 UNDER IL RTE 68
N.T.S.

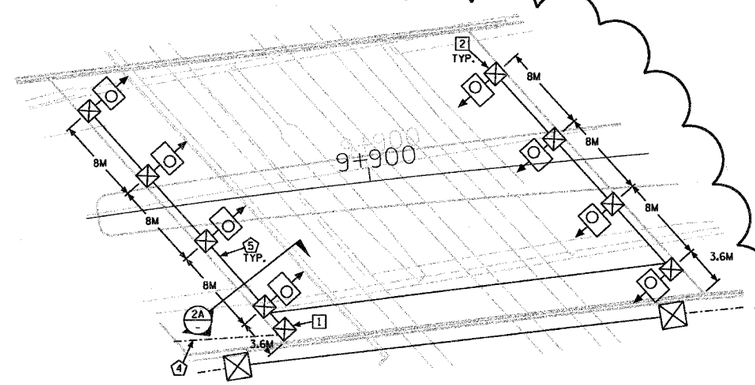

2 UNDERPASS LUMINAIRE WIRING DETAIL
UPRR UNDER IL RTE 68
N.T.S.

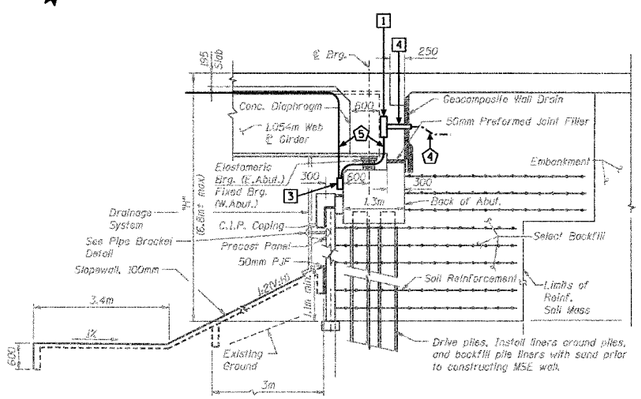

1A SECTION THRU SEMI-INTEGRAL ABUT.
US ROUTE 14 UNDER IL RTE 68
N.T.S.

TAG NOTES

1. 450mm x 450mm x 200mm STAINLESS STEEL JUNCTION BOX
2. MECHAINCAL SPLICE
3. 75mm PVC COATED RGS SLEEVE
4. 30mm UNIT DUCT
5. 25mm PVC COATED RGS
6. QUICK DISCONNECT FUSE KIT WITH 30A FUSE
7. QUICK DISCONNECT FUSE KIT WITH SOLID NEUTRAL ASSEMBLY
8. #10 COPPER, 600V
9. #4 COPPER, 600V
10. #6 COPPER GROUND
11. 300mm x 300mm x 150mm NON-METALLIC JUNCTION BOX
12. 50mm PVC COATED RGS CONDUIT
13. 65 mm EMBEDDED PVC CONDUIT

EQUIPMENT LIST

1. 450mm x 450mm x 200mm STAINLESS STEEL JUNCTION BOX ATTACHED TO BACKWALL OR WINGWALL.
2. 150mm x 150mm x 100mm STAINLESS STEEL JUNCTION BOX ATTACHED TO UNDERSIDE OF BRIDGE DECK OR FACE OF ABUTMENT.
3. 300mm x 250mm x 150mm STAINLESS STEEL JUNCTION BOX ATTACHED TO FACE OF ABUTMENT.
4. 75mm PVC COATED RGS SLEEVE WITH 30mm UNIT DUCT AND 3#4 & 1#6 GND CONDUCTORS

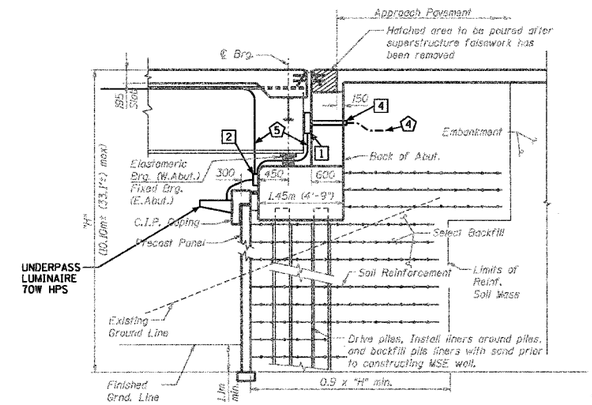

2A SECTION THRU ABUT.
UPRR UNDER IL RTE 68
N.T.S.

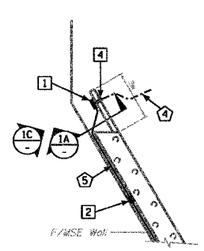

1B PARTIAL PLAN DETAIL
US ROUTE 14 UNDER IL RTE 68
N.T.S.

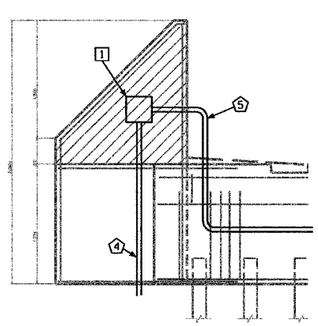

1C PARTIAL ELEVATION DETAIL
US ROUTE 14 UNDER IL RTE 68
N.T.S.

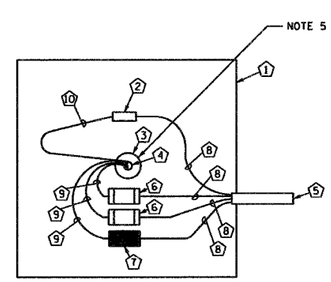

3 MAIN JUNCTION BOX WIRING DETAIL
TYPICAL FOR US ROUTE 14 & UPRR
N.T.S.

LT-18 OF 19

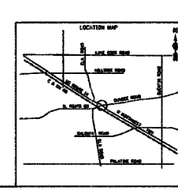

REVISIONS	
NAME	DATE
2 ADDENDUM 2	02/15/07

ILLINOIS DEPARTMENT OF TRANSPORTATION
ILLINOIS ROUTE 68 AT U.S. ROUTE 14

UNDERPASS LIGHTING DETAILS

SCALE N.T.S. DRAWN BY R.P.J.
DATE NOVEMBER 2006 DESIGNED BY I.B.
CHECKED BY A.D.O.

Rick Johns
DOT - District 01
P806119.000 - IL 68 over US 14
P806119.000 - IL 68 over US 14
2/13/2007 3:28:29 PM
250.000000 M / M.