F.A.P. RTE.	SECTION	COUNTY	TOTAL SHEETS	SHEET NO.
343	70D-Y-B-R	COOK	283	168
STA.	TO STA.			
FED. ROAD DIST. NO.	ILLINOIS	FED. AID PROJECT		

CONTRACT NO. 62897

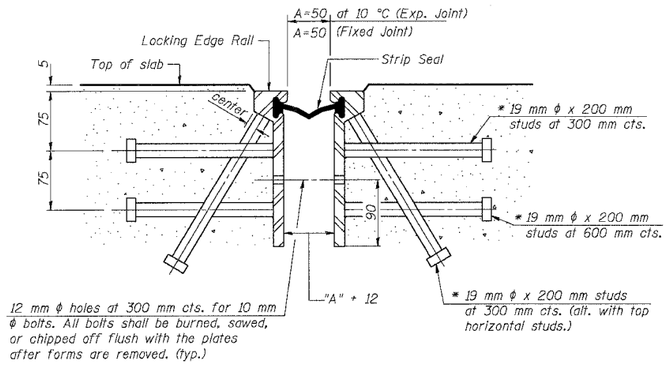

SECTION THRU ROLLED RAIL JOINT

(444-Studs Required Exp. Joint
444-Studs Required Fixed Joint)

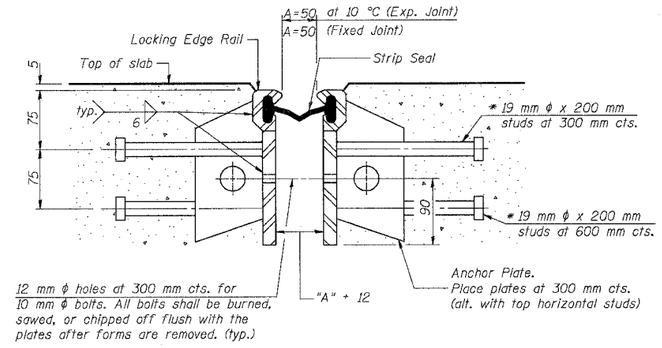

SECTION THRU WELDED RAIL JOINT

(334-Studs Required - Exp Jt.
334-Studs Required - Fixed Jt.)

(222-Anchor Plates Required - Exp. Jt.
222-Anchor Plates Required - Fixed Jt.)

* Granular or solid flux filled headed studs conforming to Article 1006.32 of the Std. Specs., automatically end welded.

GENERAL NOTES

The strip seal shall be made continuous and shall have a minimum thickness of 6 mm. The configuration of the strip seal shall match the configuration of the Locking Edge Rails.

The height and thickness of the Locking Edge Rails shown are minimum dimensions. The actual configuration of the Locking Edge Rails and matching strip seal may vary from manufacturer to manufacturer. Flanged edge rails will not be allowed.

Locking Edge Rails may be spliced at slope discontinuities and stage construction joints.

The manufacturer's recommended installation methods shall be followed.

All dimensions are in millimeters (mm) except as noted.

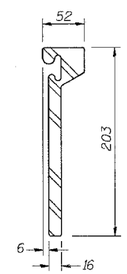

ROLLED (EXTRUDED) RAIL

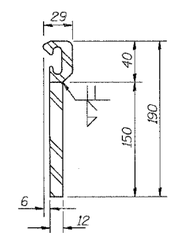

WELDED RAIL

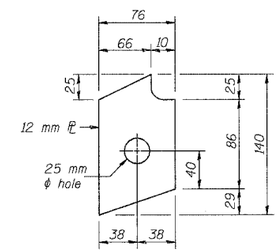

ANCHOR ℙ

(for welded rail)

LOCKING EDGE RAILS

BILL OF MATERIAL

Item	Unit	Total
Preformed Joint Strip Seal	meter	65.8

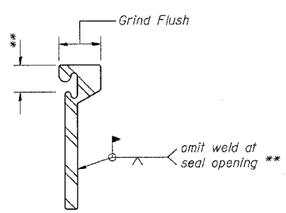

LOCKING EDGE RAIL SPLICE

The inside of the locking edge rail groove shall be free of weld residue.

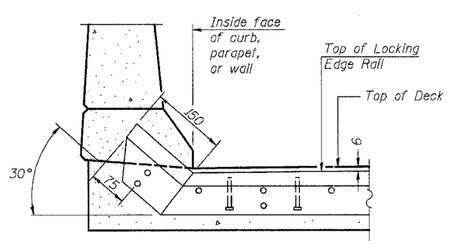

AT CURB, PARAPET, OR WALL

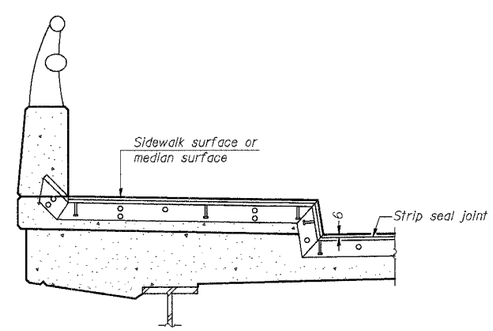

AT SIDEWALK OR MEDIAN*

* Shorter plates with a single row of studs at 300 mm centers may be necessary on medians which are shallower than 225 mm. See manufacturer's recommendation.

TYPICAL END TREATMENTS

SHT. S-14 OF S-34

REVISIONS	
NAME	DATE

ILLINOIS DEPARTMENT OF TRANSPORTATION
IL ROUTE 68 OVER UPRR
F.A.P. ROUTE 343 SECTION 70D-Y-B-R
COOK COUNTY STATION 9+900.324
STRUCTURE NO. 016-2732

STRIP SEAL JOINT

DATE: 10/06 DESIGNED: BTO CHECKED: JAN DRAWN: BTO CHECKED: JAN