STATE OF ILLINOIS
DEPARTMENT OF TRANSPORTATION

ROUTE NO.	SECTION	COUNTY	TOTAL SHEETS	SHEET NO.
F.A.P. 545	114T-1	CARROLL	118	41
FED. ROAD DIST. NO. 2	ILLINOIS	FED. AID PROJECT-		

SHEET NO. 04
11 SHEETS

Contract # 64C31

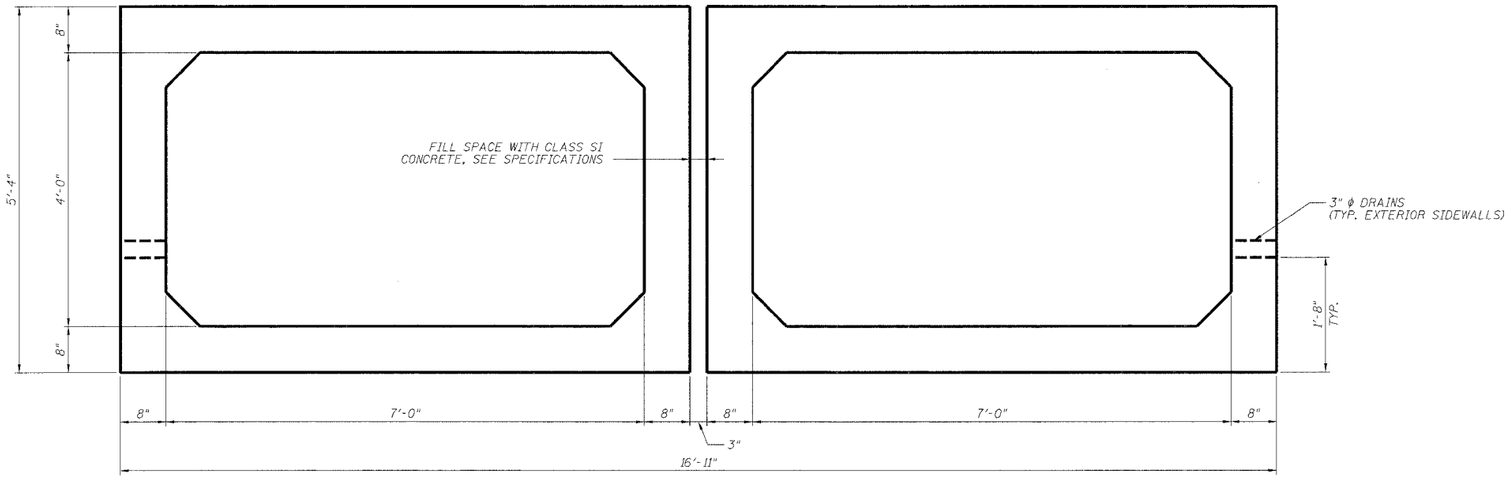

PRECAST TYPICAL SECTION

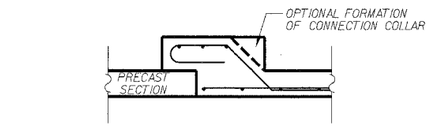

OPTIONAL PRECAST TO CAST-IN-PLACE CONNECTION COLLAR

NOTE:
ADDITIONAL CONCRETE USED FOR THE OPTIONAL COLLAR FORMATION WILL BE PROVIDED AT THE CONTRACTOR'S EXPENSE.

NOTE:
CLASS SI CONCRETE TO BE POURED BETWEEN PRECAST SECTIONS PRIOR TO FORMING AND POURING OF CAST-IN-PLACE SECTIONS.

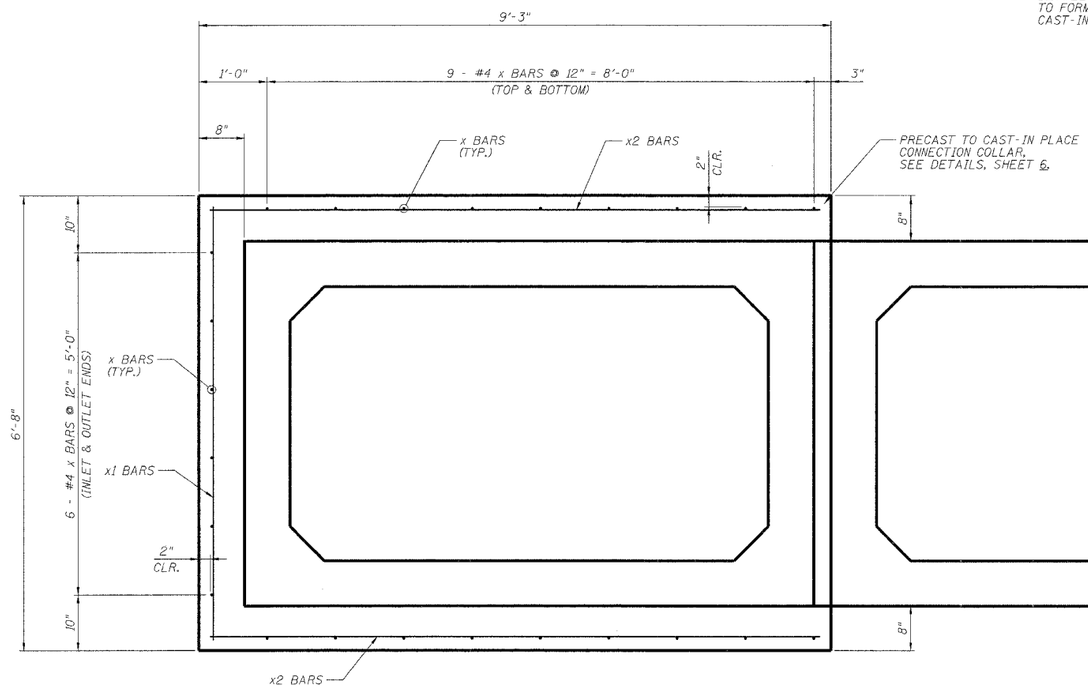

SECTION A-A & A1-A1

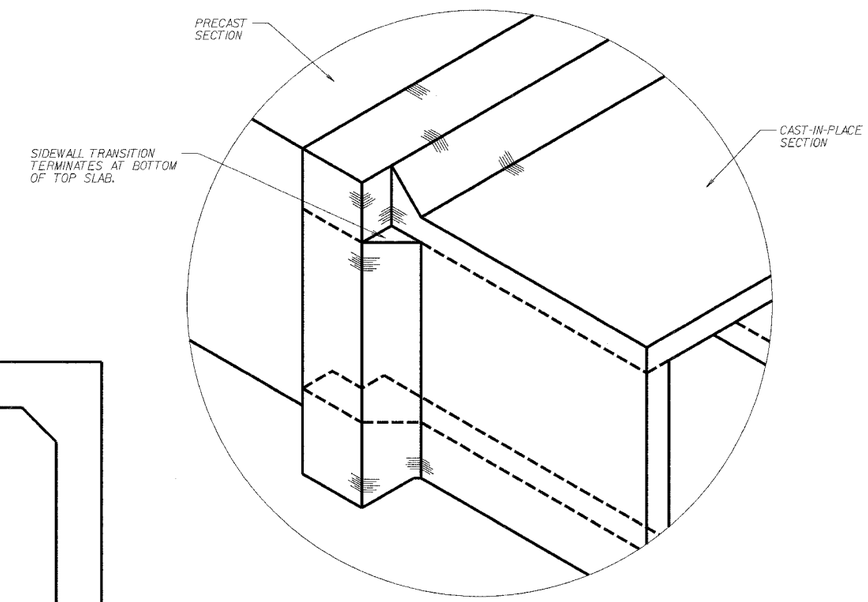

ISOMETRIC VIEW OF CONNECTION COLLAR

DESIGNED	-	ASP
CHECKED	-	WSP
DRAWN	-	BGC
CHECKED	-	ASP

200

EXAMINED

ENGINEER OF BRIDGE DESIGN

PASSED

ENGINEER OF BRIDGES AND STRUCTURES

TYPICAL SECTION
F.A.P. 545 (IL. RTE. 72)
SECTION 114T-1
CARROLL COUNTY
STATION 322+38.25
STRUCTURE NO. 008-1091