ROUTE NO.	SECTION	COUNTY	TOTAL SHEETS	SHEET NO.
F.A.P. 693	129 B-2	MCLEAN	34	32
FED. ROAD DIST. NO. 5	ILLINOIS	PROJECT		

Sheet 11 of 13 CONTRACT #70519

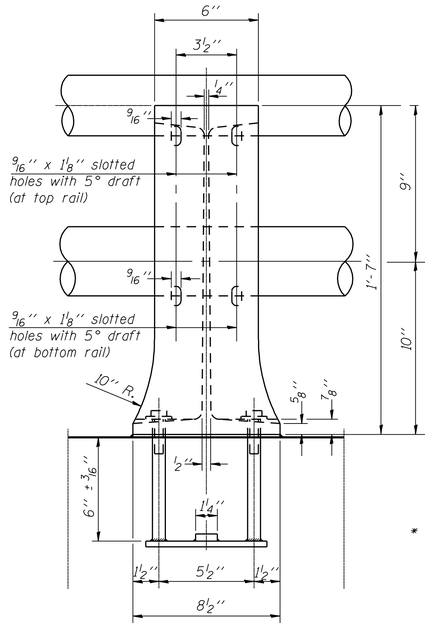

VIEW B-B

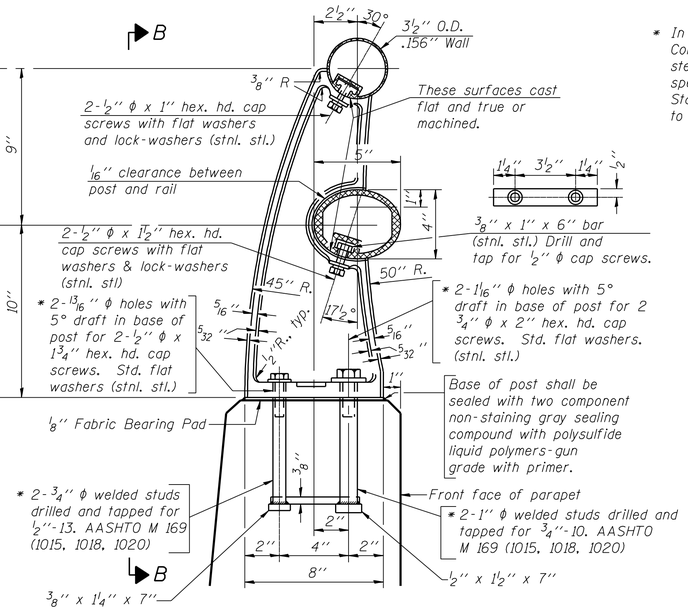

SECTION A-A

RAIL POST DETAILS

* In lieu of the cast-in-place anchor device shown, the Contractor has the option of drilling and setting stainless steel anchor rods of the same diameter and grade as the specified cap screws according to Article 509.06 of the Standard Specifications. Embedment shall be according to the manufacturer's specifications.

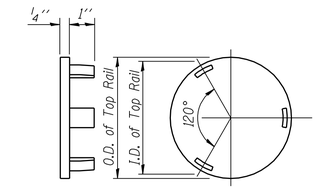

CAST END CAP

For Top Rail
(2 Required)

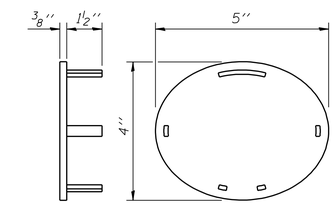

CAST END CAP

For Bottom Rail
DRIVE FIT TYPE
(2 Required)

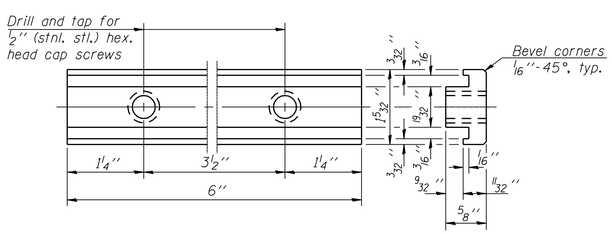

RAIL POST CLAMP BAR

For Top Rail

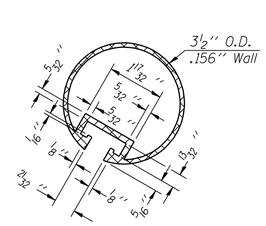

SECTION THRU TOP RAIL

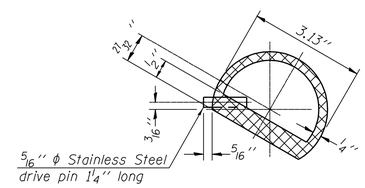

SECTION THRU SPLICE

For Top Rail

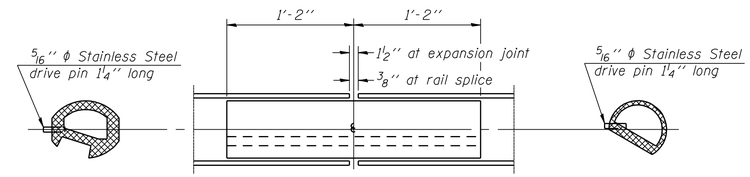

RAIL SPLICE

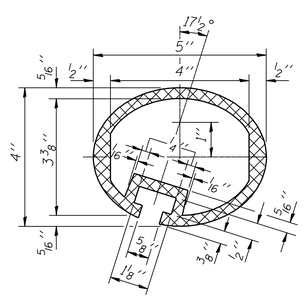

SEC. THRU ELLIPTICAL RAIL SECTION

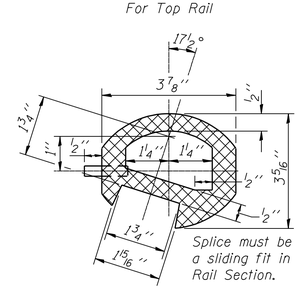

SEC. THRU SPLICE

Notes:
All Posts shall be normal to parapet.
All joints in rail shall be spliced per detail.
Provide 1-⅛'' and 2-1/16'' Aluminum Shims for 25% of the Posts. Rail elements shall be parallel to Grade-high spots will be ground and low spots shimmed.
Cost of end caps included with Aluminum Railing, Type L.
See sheet 8 of 13 for rail post spacing.

BILL OF MATERIAL

Item	Unit	Quantity
Aluminum Railing, Type L	Foot	75

DESIGNED	T.S.H.
CHECKED	M.D.C.
DRAWN	A.A.N.
CHECKED	M.D.C.

R-20 11-1-06 (7'-0'' to 10'-0'' Post spacing)

ALUMINUM RAILING, TYPE L

ILLINOIS ROUTE 9 OVER SUGAR CREEK
F.A.P. ROUTE 693 - SEC. 129 B-2
MCLEAN COUNTY
STATION 67+94
STRUCTURE NO. 057-0190

CUMMINS ENGINEERING CORPORATION

JOB #: 2114.5
FILE: 21145raill
DATE: 12/18/06