CONTRACT NO. 70547

| F.A.I. RTE. | SECTION | COUNTY | TOTAL SHEETS | SHEET NO. |
|---|---|---|---|---|
| 57&74 | * | ** | 151 | 42 |

* D5 CABLE GUARD 2007-2
** CHAMPAIGN, DEWITT & DOUGLAS

# DETAIL OF BOX CULVERT EXTENSION WITH CAST-IN-PLACE BOX CULVERT

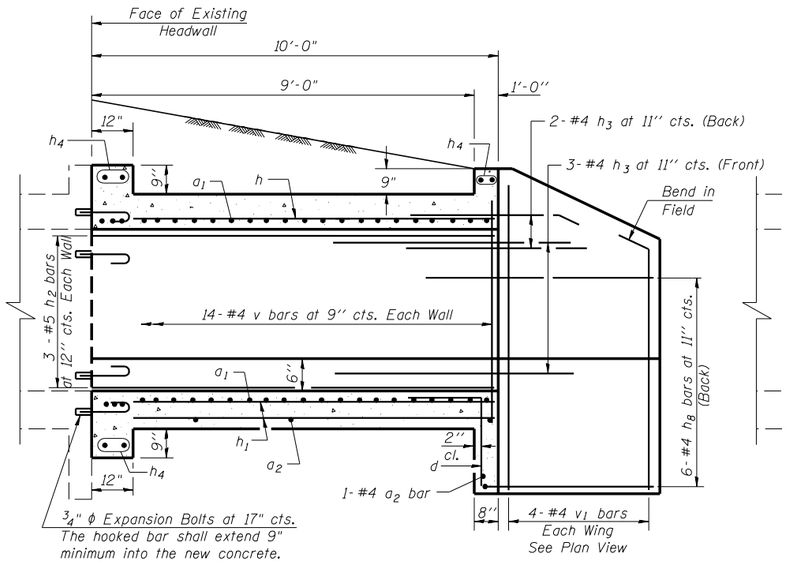


## HALF LONG. SECTION

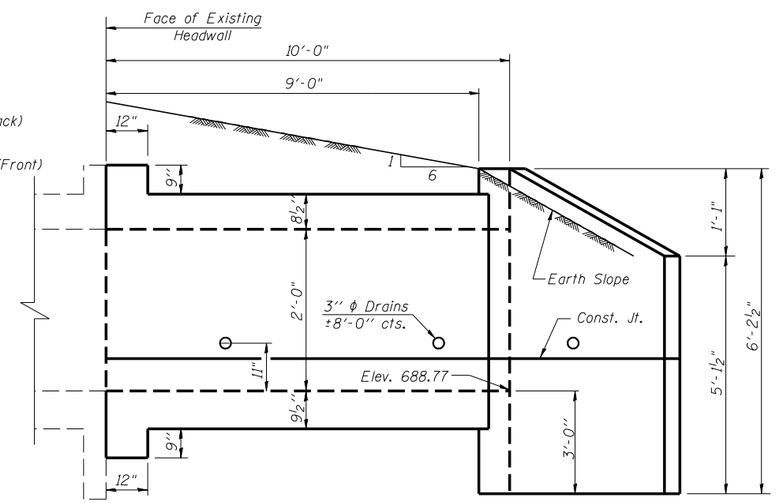


## HALF ELEVATION

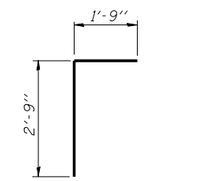


## BAR d

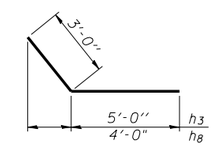


## BARS h3 & h8

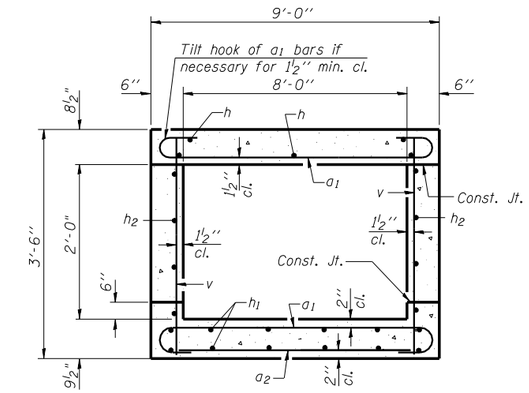


## SECTION THRU BARREL

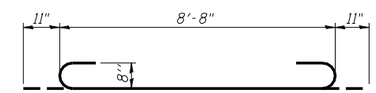


## BAR a1

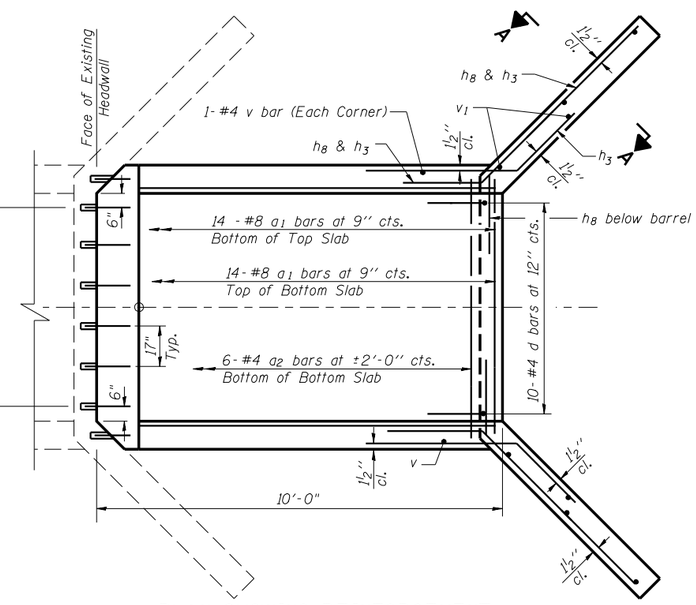


## PLAN SHOWING REINFORCEMENT

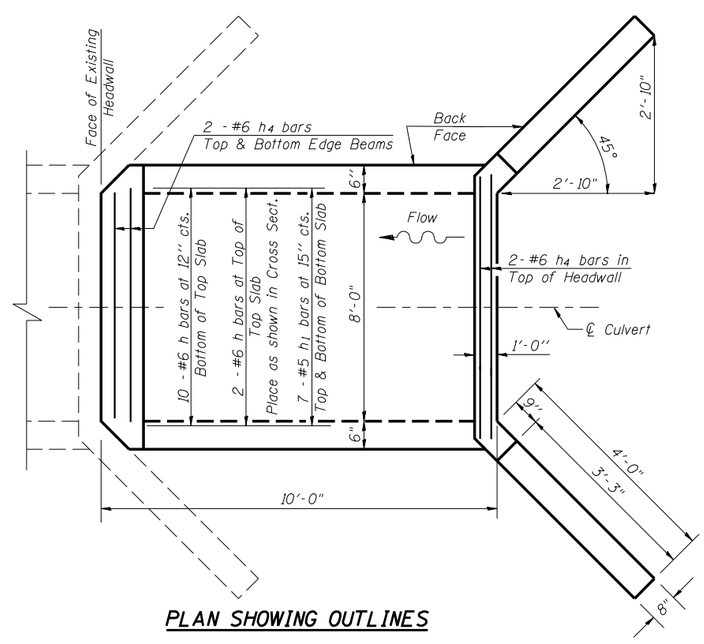


## PLAN SHOWING OUTLINES

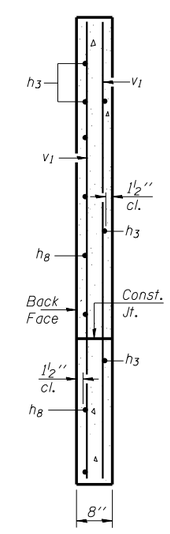


## SECTION A-A

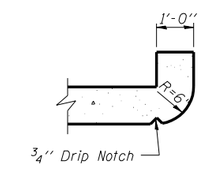


## SECTION THRU HEADWALL

(Up Stream End Only)

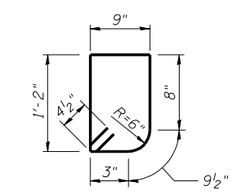


## BAR s

Headwall Stirrups @ 12" cts.

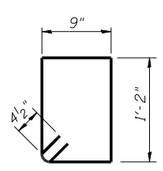


## BAR s1

Top & Bottom Edge Beams Stirrups @ 12" cts.

## BILL OF MATERIAL

| Bar | No. | Size | Length | Shape |
|---|---|---|---|---|
| a1 | 28 | #8 | 10'-6" | |
| a2 | 7 | #4 | 8'-3" | |
| d | 10 | #4 | 4'-6" | |
| h | 12 | #6 | 9'-8" | |
| h1 | 16 | #5 | 9'-8" | |
| h2 | 6 | #5 | 9'-8" | |
| h3 | 10 | #4 | 8'-0" | |
| h4 | 6 | #6 | 8'-8" | |
| h8 | 12 | #4 | 7'-0" | |
| s | 10 | #4 | 4'-5" | |
| s1 | 20 | #4 | 4'-7" | |
| v | 30 | #4 | 3'-2" | |
| v1 | 8 | #4 | 5'-1" | |
| Concrete Box Culverts | | | Cu. Yd. | 8.9 |
| Reinforcement Bars | | | Pound | 1620.0 |
| 3/4 Inch Expansion Bolts | | | Each | 16.0 |

## NOTES

A distance of half the length of the wingwall but not less than six feet of the barrel shall be poured monolithically with the wingwalls.

Reinforcement Bars shall conform to the requirements of AASHTO M-31, M-42 or M-53, Grade 60.

Bars indicated thus 12 x 4-#5 etc. indicates 12 lines of bars with 4 lengths per line.

All construction joints shall be bonded.

## DESIGN STRESSES

fy = 60,000 psi
f'c = 3,500 psi

## LOADING HS 20-44 & ALT.

ILLINOIS DEPARTMENT OF TRANSPORTATION

**BOX CULVERT EXTENSION W/CAST-IN-PLACE BOX CULVERT LT. STA 225+00**

SCALE: NA — DRAWN BY: CADD
DATE: 08/30/06 — CHECKED BY

PLOT DATE = 11/2/2006
FILE NAME = c:\pr0jects\d505105 (v8)\details70547.dgn
PLOT SCALE = 100.0021 ' / IN.
USER NAME = pullipsj

**LOCATION #2 PESOTUM**