CONTRACT NO. 70564

F.A. RTE.	SECTION	COUNTY	TOTAL SHEETS	SHEET NO.
VAR.	*	**	27	10

* DS CRACK & JOINT SEAL 2007-2
** DEWITT/PIATT

EXISTING TYPICAL CROSS SECTION – FAP 71 (IL 54) (1)

LOCATION #1

STATION	TO	STATION
639+80		641+88.16
649+27.44		674+20
699+37.66		706+04

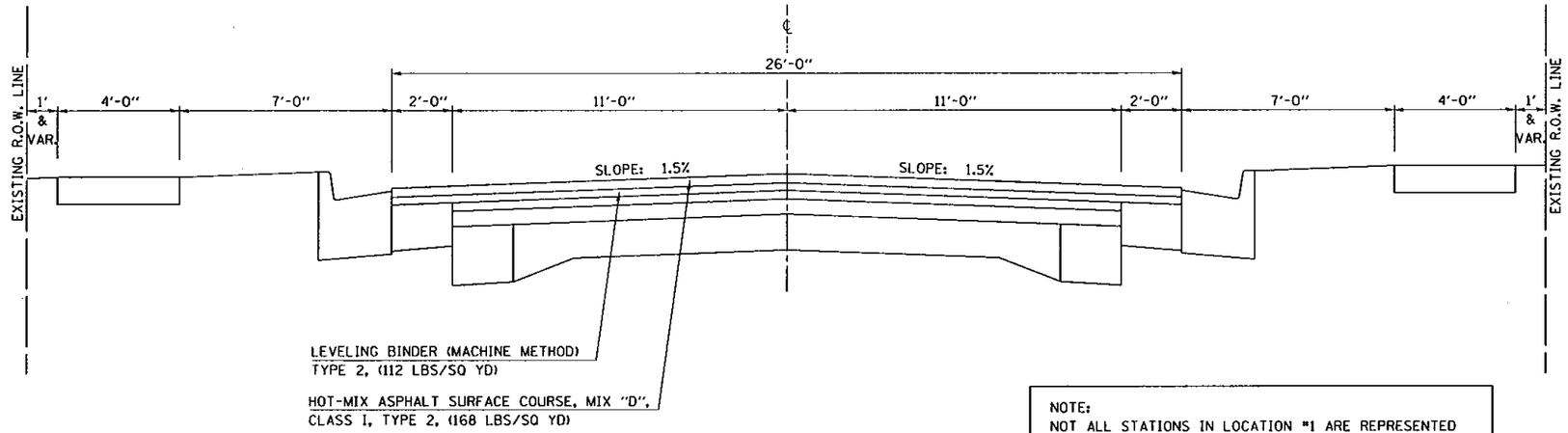

NOTE:
NOT ALL STATIONS IN LOCATION #1 ARE REPRESENTED BY THESE TYPICALS; HOWEVER, THE MAJORITY OF THESE STATIONS ARE REPRESENTED.

EXISTING TYPICAL CROSS SECTION – FAP 71 (IL 54) (2)

LOCATION #1

STATION	TO	STATION
641+88.16		649+27.44

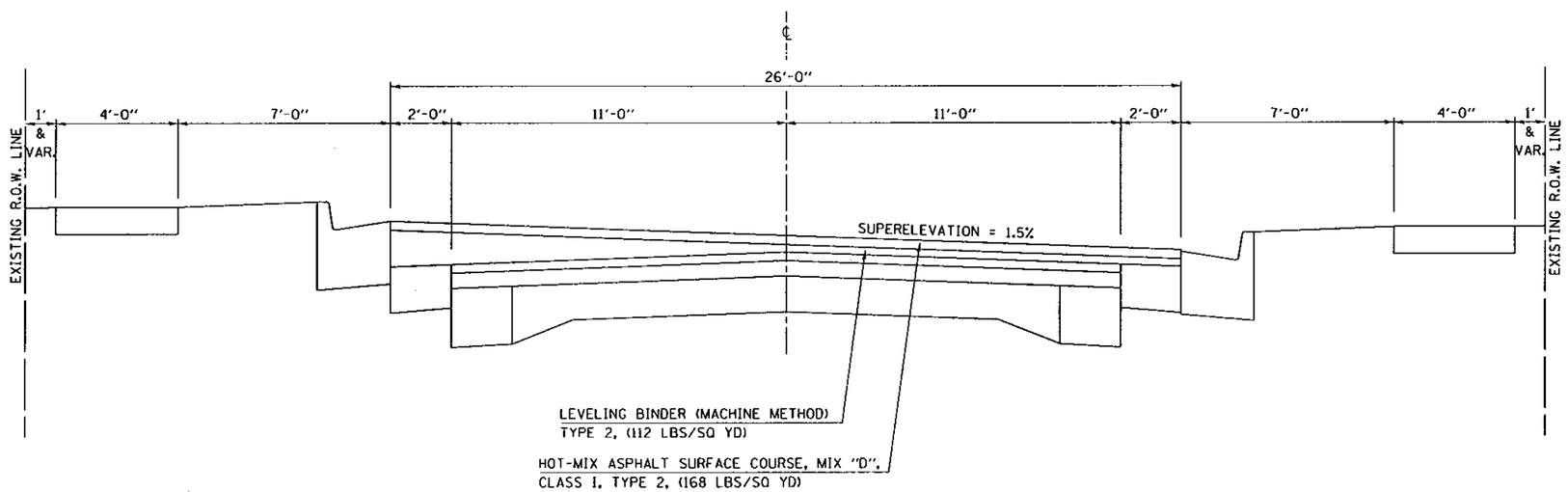

PLOT DATE : 11/15/2006
FILE NAME : c:\pw_work\pw_687906 \d01\70564\typsecs.dgn
PLOT SCALE : 100.000 ' / IN.
USER NAME : phillipsr