| ROUTE NO. | SECTION | COUNTY | TOTAL SHEETS | SHEET NO. |
|---|---|---|---|---|
| FAI 72<br>FAU 8071 | * | SANGAMON | 559 | 331 |
| FED. ROAD DIST. NO. 7 | ILLINOIS | FED. AID PROJECT- | | |

*(84-9-4)A,HBK,BY,BY-1 Contract No 72541

SHEET NO. 12
21 SHEETS

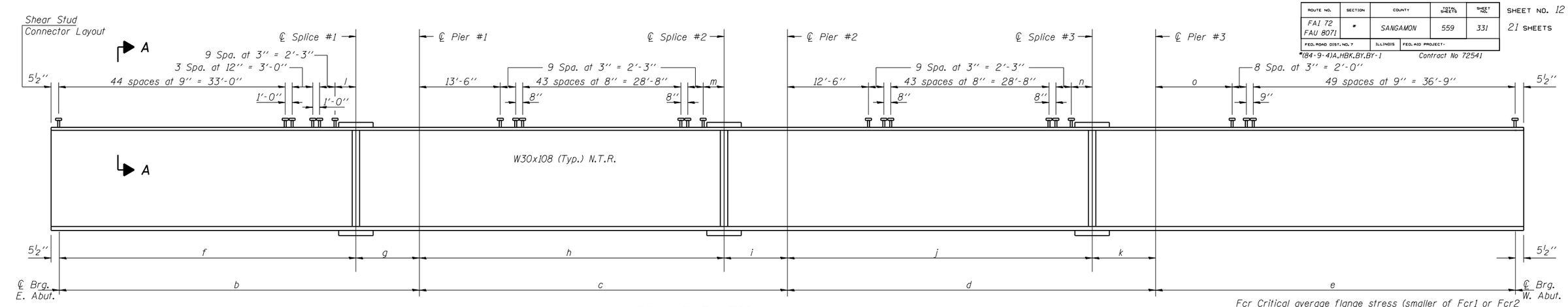


## BEAM ELEVATION

"NTR" denotes members to which notch toughness requirements are applicable.
For dimensions b thru k see sheet 11 of 21.

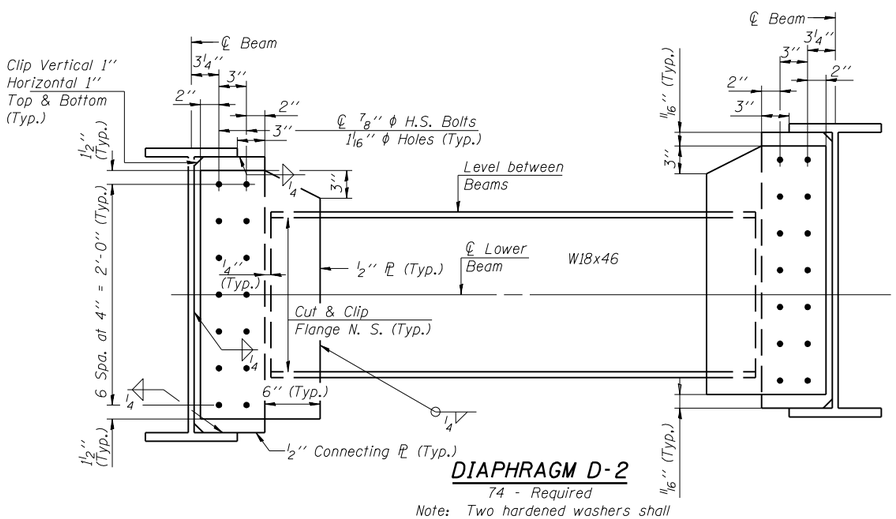


## DIAPHRAGM D-2

74 - Required

Note: Two hardened washers shall be required over all oversized holes. Horizontal dimensions at Rt. <'s to ℄ beam.

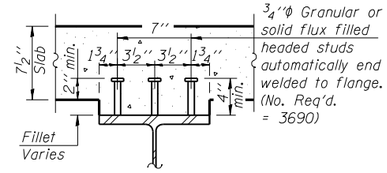


## SECTION A-A

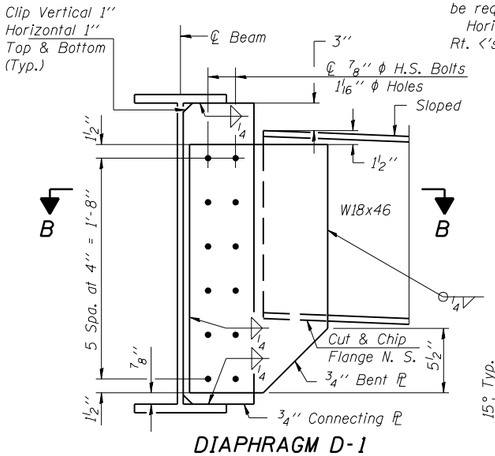


## DIAPHRAGM D-1

8 - Required

Note: Two hardened washers shall be required over all oversized holes.

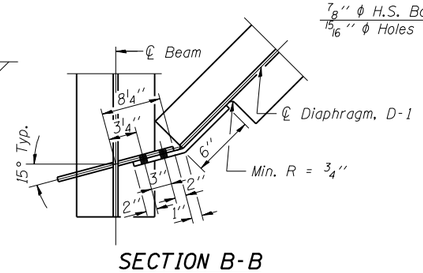


## SECTION B-B

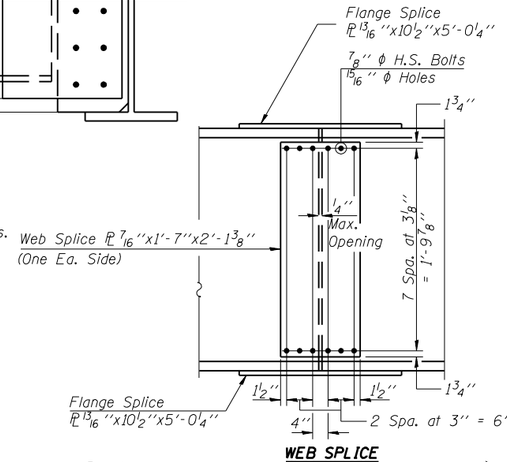


## WEB SPLICE

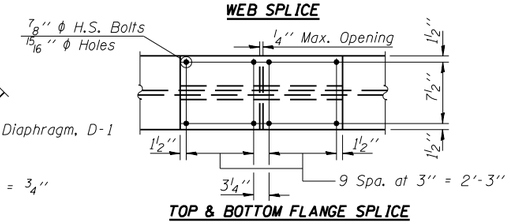


## TOP & BOTTOM FLANGE SPLICE

## FIELD SPLICE DETAIL

H.S. Bolts shall conform to AASHTO M-164 Specifications (ASTM A325)

| INTERIOR BEAM MOMENT TABLE | | | | | |
|---|---|---|---|---|---|
| | | 0.4 Sp. 1 or 0.6 Sp. 4 | Pier #1 or #3 | 0.5 Sp. 2 or Sp. 3 | Pier #2 |
| Is | (in4) | 4470 | 4470 | 4470 | 4470 |
| Ic (n) | (in4) | 11899 | - | 11899 | - |
| Ic (3n) | (in4) | 8759 | - | 8759 | - |
| Ss | (in3) | 299 | 299 | 299 | 299 |
| Sc (n) | (in3) | 441 | - | 441 | - |
| Sc (3n) | (in3) | 398 | - | 398 | - |
| St | (in3) | 13.9 | 13.9 | 13.9 | 13.9 |
| VR | (k/ft.) | 0.70 | 1.17 | 0.70 | 1.17 |
| MD | ('k) | 138 | 354 | 101 | 322 |
| sD | (k/ft.) | 0.47 | - | 0.47 | - |
| MsD | ('k) | 101 | - | 84 | - |
| ML | ('k) | 289 | 245 | 274 | 245 |
| M (Imp) | ('k) | 72 | 49 | 68 | 49 |
| 5/3[ML+M(Imp)] | ('k) | 602 | 490 | 570 | 490 |
| Ma | ('k) | 1096 | 1097 | 983 | 1056 |
| Mbt | ('k) | 3.0 | 0.0 | 3.3 | 0.0 |
| fsD non-comp | (k.s.i.) | 5.5 | 14.2 | 4.1 | 12.9 |
| fsD (comp) | (k.s.i.) | 3.0 | - | 2.5 | - |
| fs5/3[ML+M(Imp)] | (k.s.i.) | 16.4 | 19.7 | 15.5 | 19.7 |
| ft | (k.s.i.) | 2.6 | 0.0 | 2.8 | 0.0 |
| fs (Overload) | (k.s.i.) | 24.9 | 33.9 | 22.1 | 32.6 |
| fs (Total) | (k.s.i.) | 32.4 | 44.1 | 28.7 | 42.4 |
| Fcr (Overload) | (k.s.i.) | 47.5 | 47.5 | 47.5 | 47.5 |
| VR | (k) | 55.3 | - | 54.0 | - |
| Fcr | (k.s.i.) | 49.1 | 50.0 | 49.0 | 50.0 |

| INTERIOR BEAM REACTION TABLE | | | | |
|---|---|---|---|---|
| | | E.&W. Abut. | Piers #1 & #3 | Pier #2 |
| RD | (k) | 23.9 | 73.5 | 69.0 |
| RL | (k) | 36.7 | 47.7 | 47.2 |
| Imp. | (k) | 11.0 | 14.3 | 14.2 |
| R (Total) | (k) | 71.6 | 135.5 | 130.4 |

Fcr Critical average flange stress (smaller of Fcr1 or Fcr2 for partially braced flanges and Fy for continuously braced flanges) computed according to the 2003 AASHTO Guide Specifications for Horizontally Curved Steel Girder Highway Bridges (Sections 5.2, 5.3 and 5.4).

Fcr (Overload) Critical average flange stress at overload computed according to the 2003 AASHTO Guide Specifications for Horizontally Curved Steel Girder Highway Bridges Section 9.5.

Is and Ss are the moment of inertia and section modulus of the steel section used in computing fs (Total & Overload).

$Ic_{(n)}$ and $Sc_{(n)}$ are the moment of inertia and section modulus of the composite section used in computing stresses due to Live Load.

$Ic_{(3n)}$ and $Sc_{(3n)}$ are the moment of inertia and section modulus of the composite section used in computing stresses due to superimposed dead loads. (see AASHTO 10.38)

VR is the maximum Live Load + Impact shear range in span.

MD Moment due to dead loads on non-composite section.

MsD Moment due to dead loads on composite section.

ML Moment due to live load on non-composite or composite section.

M (Imp) Moment due to live load impact on non-composite or composite section.

Ma (Applied Moment)=1.3[MD + MsD + 5/3(ML + M(Imp))].

fs (Overload) is the sum of the stresses due to MD + MsD + 5/3(ML + M(Imp)).

fs (Total) is the sum of the stresses due to 1.3[MD + MsD + 5/3(ML + M(Imp))].

Sbt is the section modulus for one flange for lateral flange bending.

Mbt is the lateral bending moment for flange (factored).

ft is the calculated normal stress at the edge of flange due to lateral bending (factored).

ML and RL include the effects of centrifugal force and superelevation.

## BEAM DIMENSIONS

( Measured Along Centerline of Beam )

| Line No. | Beam 1 | Beam 2 | Beam 3 | Beam 4 | Beam 5 |
|---|---|---|---|---|---|
| l | 2'-11 5/16'' | 2'-11 5/8'' | 3'-0'' | 3'-0 5/16'' | 3'-0 11/16'' |
| m | 2'-9 1/2'' | 2'-9 13/16'' | 2'-10 3/16'' | 2'-10 9/16'' | 2'-10 7/8'' |
| n | 3'-0 5/16'' | 3'-0 5/8'' | 3'-0 7/8'' | 3'-1 3/16'' | 3'-1 1/2'' |
| o | 11'-0 3/8'' | 11'-0 5/8'' | 11'-0 7/8'' | 11'-1 1/8'' | 11'-1 3/8'' |

## **TOP OF BEAM ELEVATIONS

| Location \ Beam | Beam #1 | Beam #2 | Beam #3 | Beam #4 | Beam #5 |
|---|---|---|---|---|---|
| ℄ Brg. E. Abut. | 632.48 | 632.16 | 631.84 | 631.52 | 531.20 |
| ℄ Splice #1 | 632.58 | 632.27 | 631.95 | 631.64 | 631.32 |
| ℄ Pier #1 | 632.59 | 632.28 | 631.97 | 631.65 | 631.34 |
| ℄ Splice #2 | 632.66 | 632.35 | 632.05 | 631.74 | 631.44 |
| ℄ Pier #2 | 632.64 | 632.34 | 632.03 | 631.73 | 631.43 |
| ℄ Splice #3 | 632.56 | 632.26 | 631.96 | 631.66 | 631.37 |
| ℄ Pier #3 | 632.53 | 632.23 | 631.93 | 631.63 | 631.34 |
| ℄ Brg. W. Abut. | 632.35 | 632.06 | 631.77 | 631.47 | 631.18 |

** For Fabrication only.

Corporate License Number 184-001-084

STRUCTURAL STEEL DETAILS
I-72/MACARTHUR BLVD. RAMP C OVER UPRR
SECTION (84-9-4)A,HBK,BY,BY-1
SANGAMON COUNTY
STATION 46+01.97
STRUCTURE NUMBER 084-0516

© Copyright Hanson Professional Services Inc. $MS_YEAR$

HANSON

JOB# 96S2002B

DATE: 11/16/05

| | | |
|---|---|---|
| LAYOUT | MNM | 06/27/03 |
| DRAWN | DAP | 01/04/05 |
| REVIEWED | JNM | 02/24/05 |

$FILE$
12/16/2006