ROUTE NO.	SECTION	COUNTY	TOTAL SHEETS	SHEET NO.
FAI 72 FAU 8071	*	SANGAMON	559	335
FED. ROAD DIST. NO. 7		ILLINOIS	FED. AID PROJECT-	

SHEET NO. 16
21 SHEETS

*(84-9-4)A,HBK,BY,BY-1 Contract No 72541

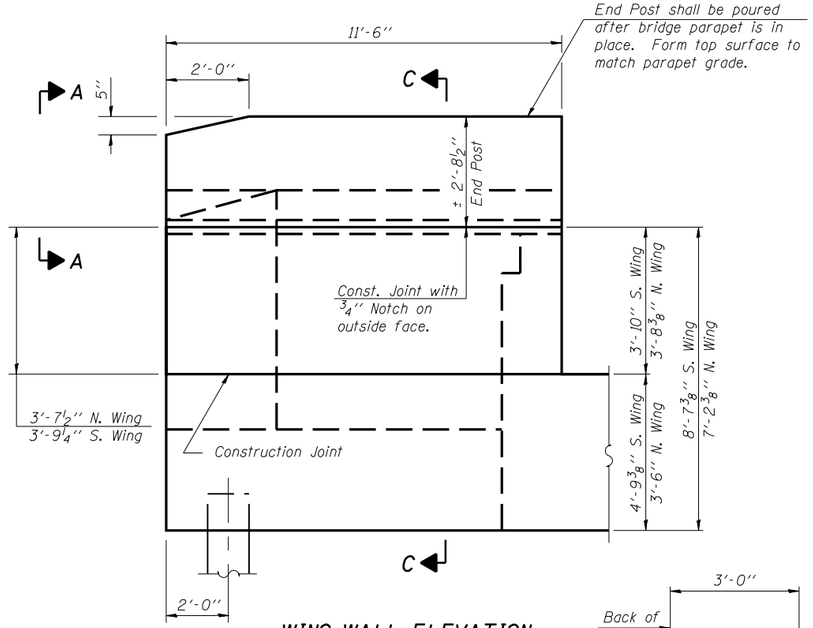

WING WALL ELEVATION
Showing Dimensions

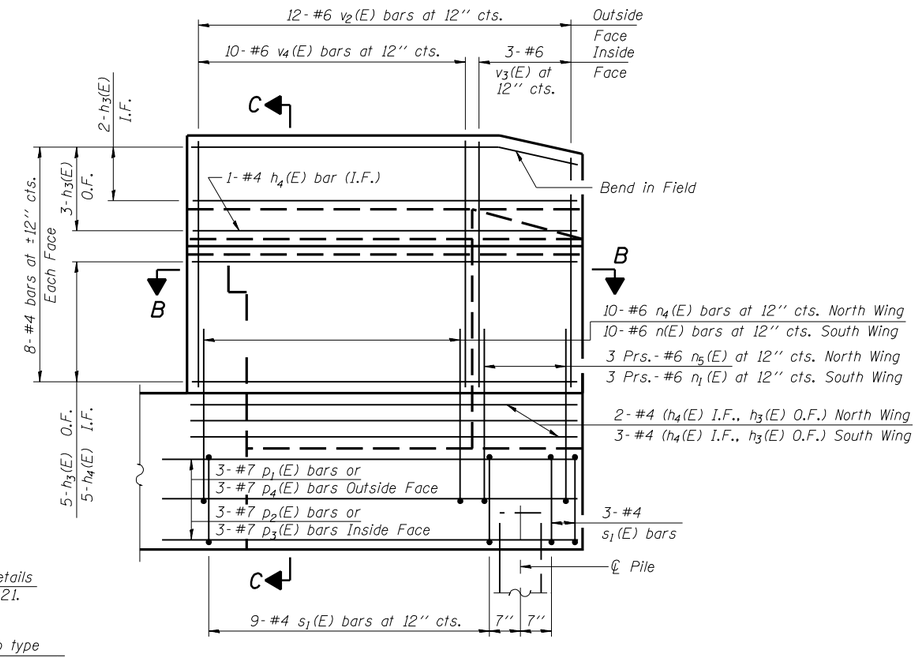

WING WALL ELEVATION
Showing Reinforcement

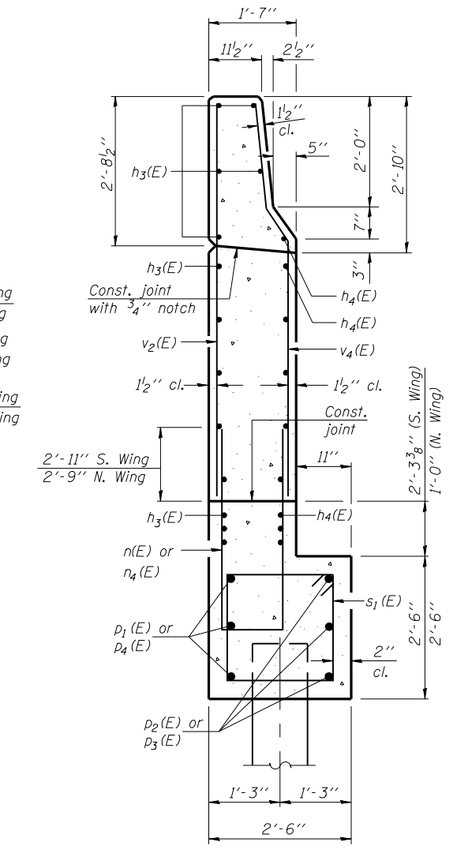

SECTION C-C

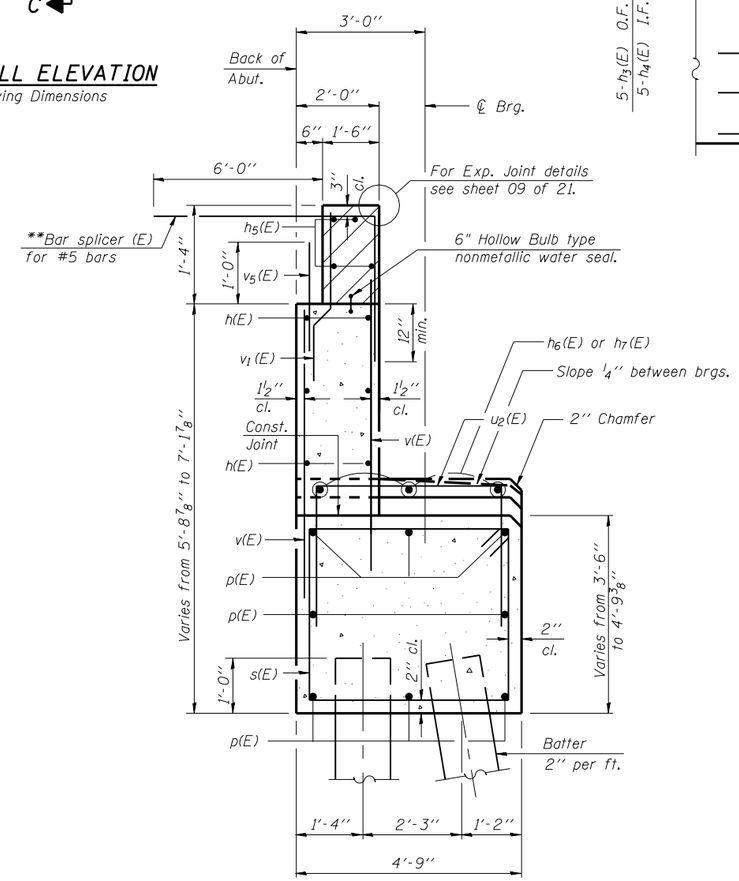

SEC. THRU ABUT.
**Alternate with #4 v(E) bars
Place parallel to the beams

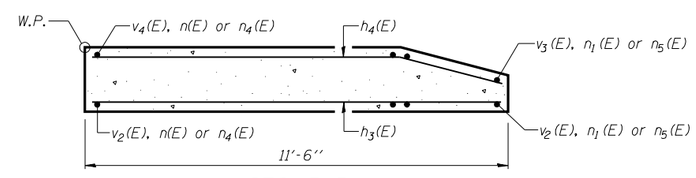

SEC. B-B

Notes: Hatched area to be poured after superstructure forms have been removed. Quantity of concrete included with Concrete Superstructure.
Space reinforcement in cap to miss anchor bolts.
Pour steps monolithically with cap.
Reinforcement bars designated (E) shall be epoxy coated.
Quantity of concrete in end post included with Concrete Superstructure on sheet 08 of 21.
Conduit is embedded in the North Wing. For details, see Conduit Details sheet in the Roadway Plans.

MIN. BAR LAPS

#4 Bar - 1'-8"
#5 Bar - 2'-2"
#6 Bar - 2'-7"
#7 Bar - 3'-5"

Corporate License Number 184-001-084

EAST ABUTMENT DETAILS
I-72/MACARTHUR BLVD. RAMP C OVER UPRR
SECTION (84-9-4)A,HBK,BY,BY-1
SANGAMON COUNTY
STATION 46+01.97
STRUCTURE NUMBER 084-0516

© Copyright Hanson Professional Services Inc. MS_YEAR

HANSON

JOB# 96S2002B
DATE: 11/16/05

LAYOUT	MNM	06/27/03
DRAWN	DAP	01/04/05
REVIEWED	JNM	02/24/05

$FILE$
12/16/2006