F.A.P. RTE.	SECTION	COUNTY	TOTAL SHEETS	SHEET NO.
753	139B-1	SANGAMON	39	25
FED. ROAD DIST. NO.	ILLINOIS	FED. AID PROJECT		

DETAILS OF MAILBOX TURNOUTS

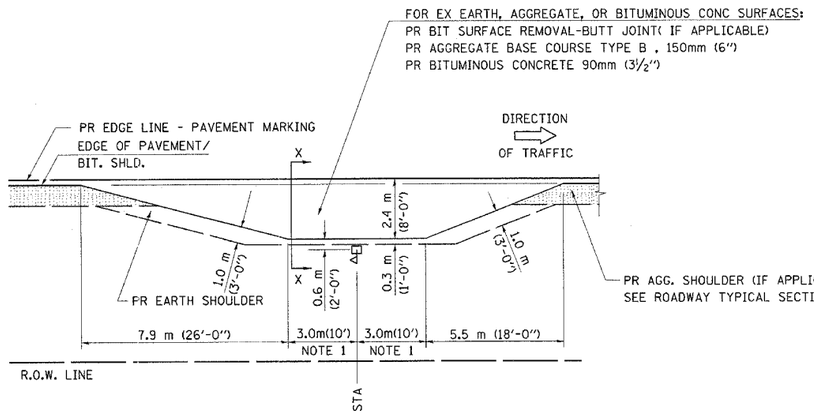

PLAN - MAILBOX TURNOUTS

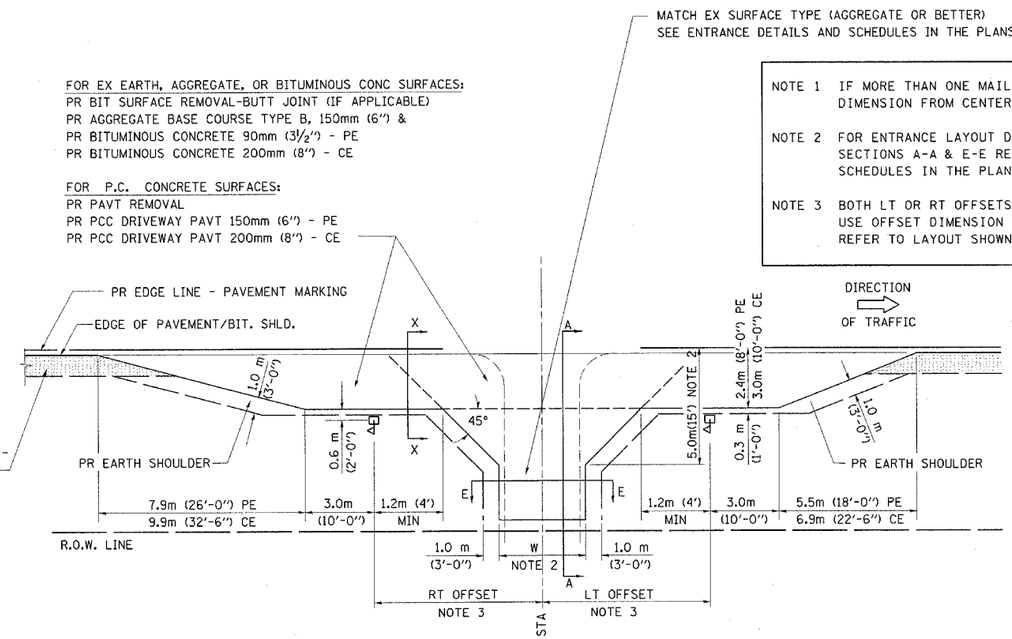

NOTE 1 IF MORE THAN ONE MAILBOX IS PRESENT, DIMENSION FROM CENTER OF END MAILBOX.

NOTE 2 FOR ENTRANCE LAYOUT DIMENSIONS AND SECTIONS A-A & E-E REFER TO THE SCHEDULES IN THE PLANS.

NOTE 3 BOTH LT OR RT OFFSETS FOR MAILBOX SHOWN USE OFFSET DIMENSION PER SCHEDULE AND REFER TO LAYOUT SHOWN ON THE PLAN.

PLAN - COMBINED MAILBOX TURNOUT WITH TRAILING OR LEADING ENTRANCE

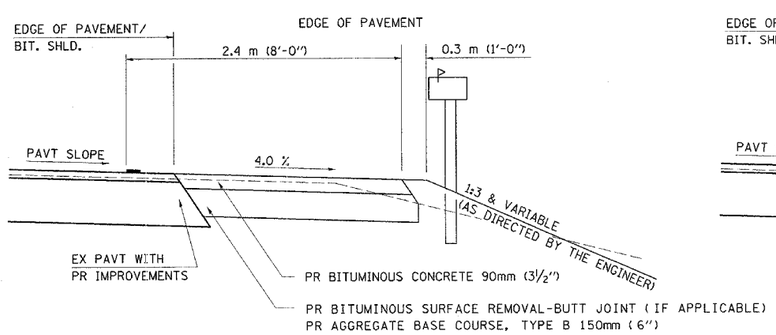

SECTION X-X THRU MAILBOX TURNOUT ALSO APPLIES TO MAILBOX TURNOUTS COMBINED WITH EX EARTH, AGGREGATE, OR BITUMINOUS PE & FE

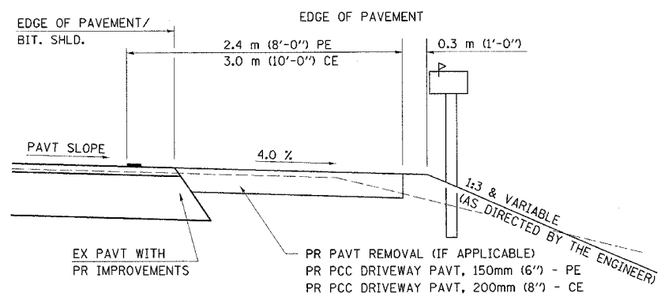

SECTION X-X THRU MAILBOX TURNOUT COMBINED WITH EX CONC PE OR CE

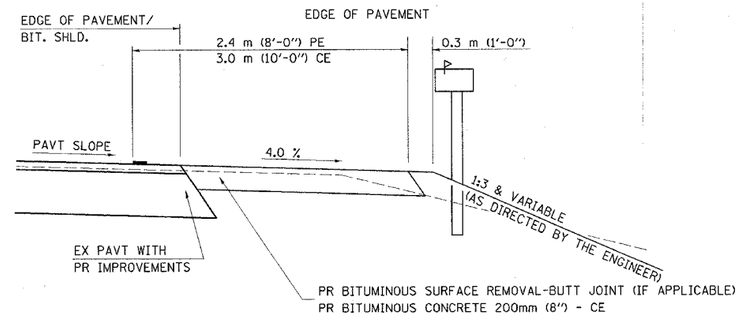

SECTION X-X THRU MAILBOX TURNOUT COMBINED WITH EX EARTH, AGGREGATE, OR BITUMINOUS CE

SHEET 2 OF 3

REVISIONS	
NAME	DATE

ILLINOIS DEPARTMENT OF TRANSPORTATION

DISTRICT SIX

DETAILS FOR RURAL /URBAN ENTRANCE & MAILBOX TURNOUT W /O CONCRETE GUTTER (3R – PROJECTS)

SCALE: VERT. HORIZ.

DATE : 2/2004

DRAWN BY D6

CHECKED BY BWC