Notes:
Space reinforcement in cap to miss anchor bolts.
Pour steps monolithically with cap.
The Steel H-piles shall be according to AASHTO M270 Grade 50.

STATE OF ILLINOIS
DEPARTMENT OF TRANSPORTATION

ROUTE NO.	SECTION	COUNTY	TOTAL SHEETS	SHEET NO.
F.A.P. 717	101B-1	LOGAN	49	31
FED. ROAD DIST. NO. 7	ILLINOIS	FED. AID PROJECT-		

SHEET NO. 15
23 SHEETS

Contract #72A04

PILE DATA

Type:	HP 14x89
Nominal Required Bearing:	704 kips
Allowable Resistance Available:	235 kips
Est. Length:	127 ft.
No. Required:	5 + 1 Test Pile*

* See Section A-A for location of Test Pile.

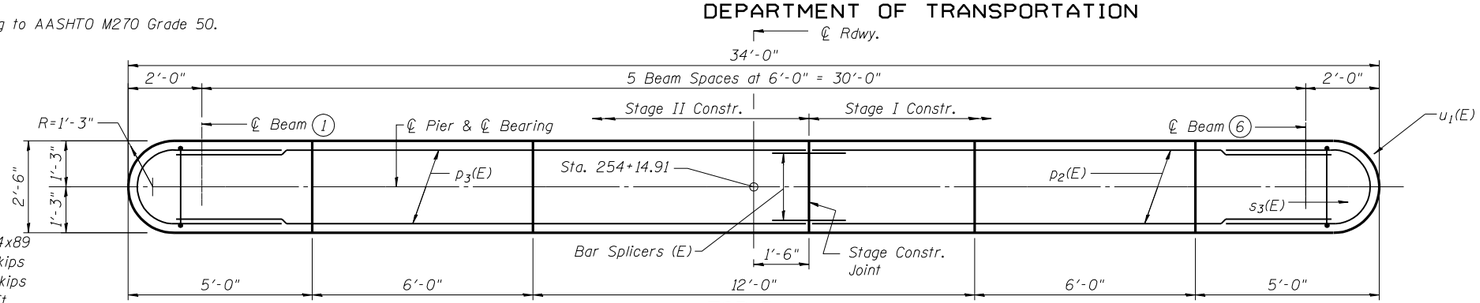

TOP PLAN

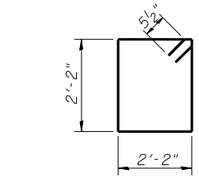

BAR $s_3(E)$

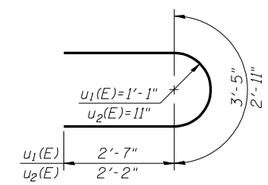

BARS $u_1(E)$ & $u_2(E)$

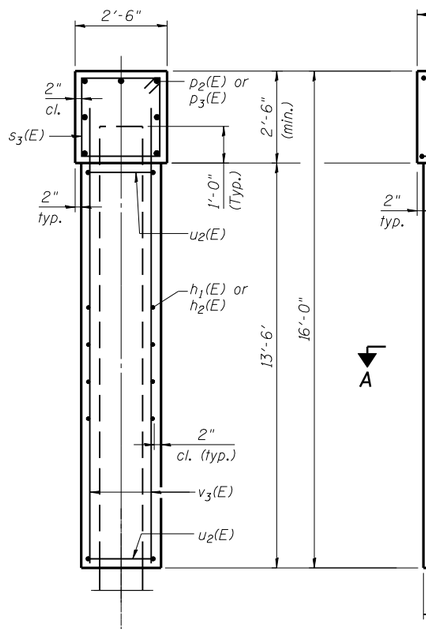

END VIEW

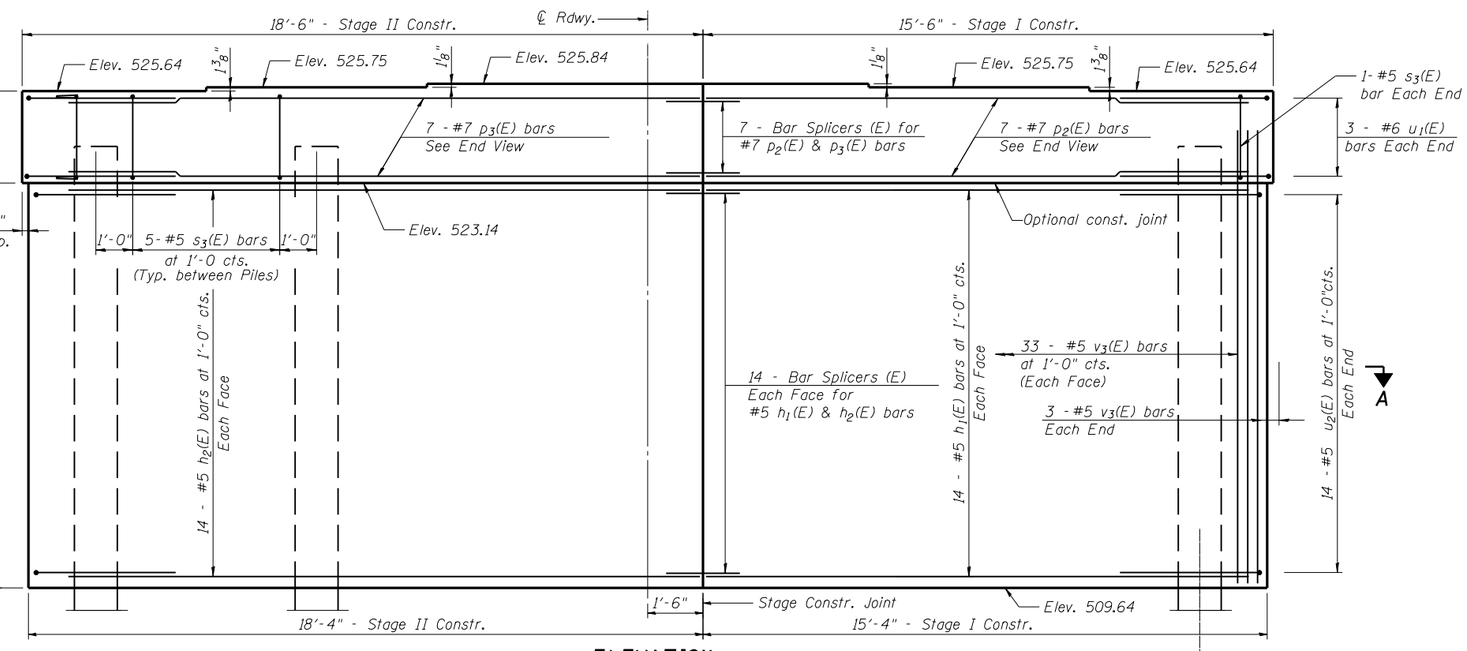

ELEVATION
(Looking East)

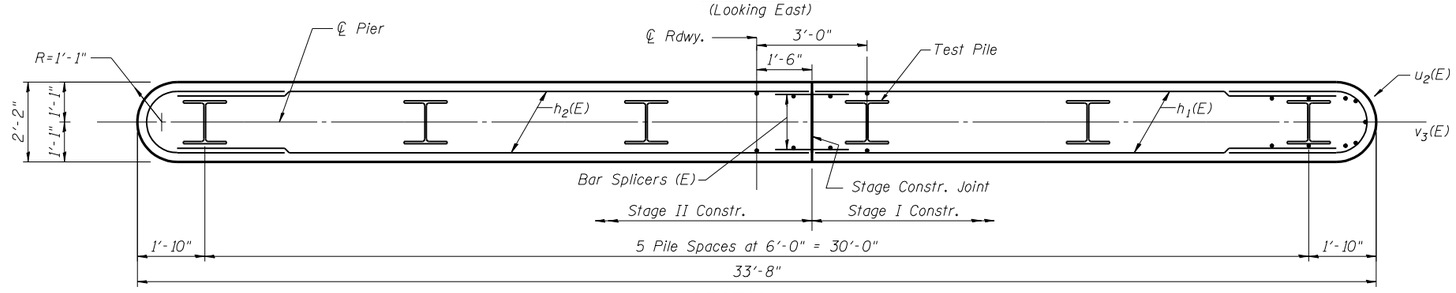

SECTION A-A

PIER 1
BILL OF MATERIAL

Bar	No.	Size	Length	Shape
$h_1(E)$	28	#5	14'-1"	
$h_2(E)$	28	#5	17'-1"	
$p_2(E)$	7	#7	14'-1"	
$p_3(E)$	7	#7	17'-1"	
$s_3(E)$	27	#5	9'-7"	
$u_1(E)$	6	#6	8'-7"	
$u_2(E)$	28	#5	7'-3"	
$v_3(E)$	72	#5	15'-4"	
Structure Excavation			Cu. Yd.	64
Concrete Structures			Cu. Yd.	44.2
Reinforcement Bars, Epoxy Coated			Pound	3,070
Furnishing Steel Piles HP14x89			Foot	635
Driving Piles			Foot	635
Test Piles Steel HP14x89			Each	1

DESIGNED	D.J.T. & S.D.S.
CHECKED	J.J.P. & S.D.S.
DRAWN	L.M.G. & D.L.H.
CHECKED	D.J.T. & S.D.S.

WHKS & CO.
ENGINEERS — PLANNERS — LAND SURVEYORS
MASON CITY, IOWA DUBUQUE, IOWA AMES, IOWA
E. DUBUQUE, ILLINOIS SPRINGFIELD, ILLINOIS ROCHESTER, MINNESOTA

PIER 1
IL ROUTE 10 OVER PRAIRIE CREEK
F.A.P. ROUTE 717 - SECTION 101B-1
LOGAN COUNTY
STATION 254+75.91
STRUCTURE NO. 054-0507