Contract No. 76857

STATE OF ILLINOIS
DEPARTMENT OF TRANSPORTATION

F.A.I. ROUTE	SECTION	COUNTY	TOTAL SHEETS	SHEET NO
270	60-6HB	MADISON	156	92
STA.		TO STA.		
FED. ROAD DIST. NO.	ILLINOIS	FED. AID PROJECT-		

SHEET NO. 1 OF 2

GENERAL NOTES

A Concrete Sealer shall be applied to the surfaces of the deck and parapets (See Special Provisions for BRIDGE DECK CONCRETE SEALER).

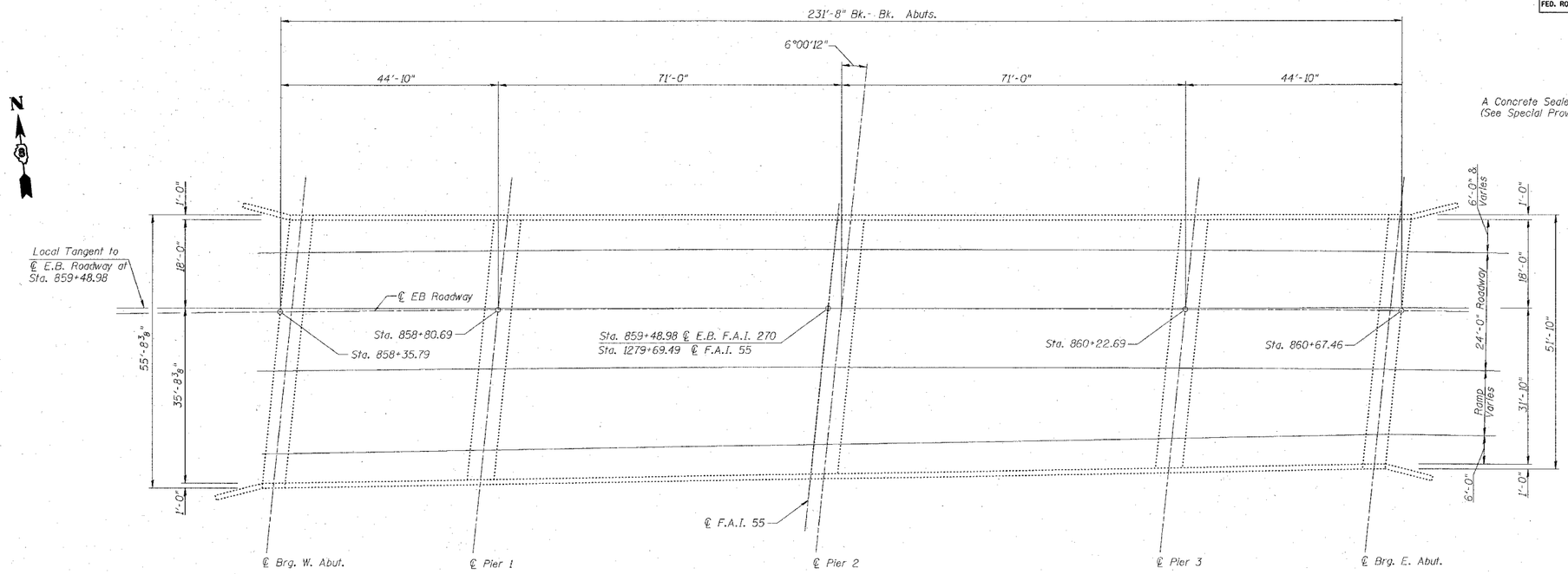

PLAN

(Eastbound)

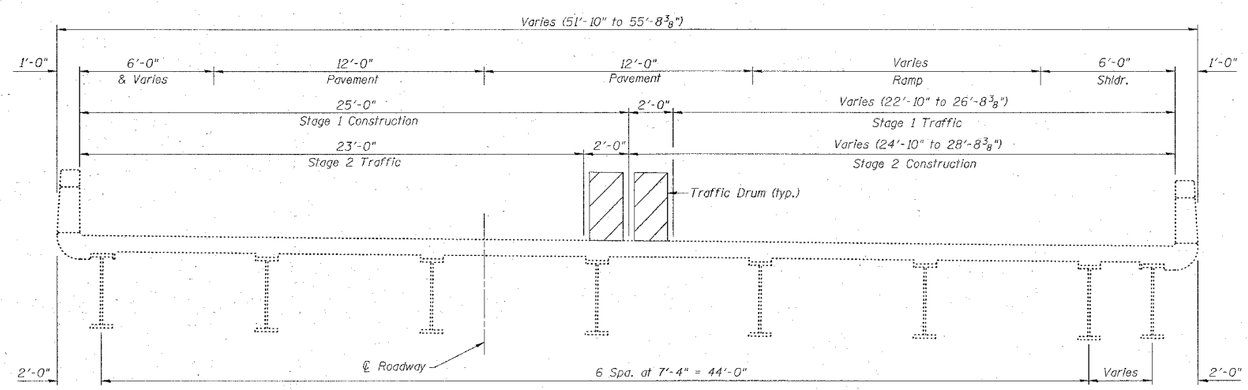

CROSS SECTION

(Eastbound, Looking East)

TOTAL BILL OF MATERIALS

ITEM	UNIT	SUPER	SUB	TOTAL
Concrete Sealer	Sq. Yd.	1526	--	1526

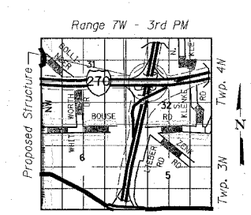

LOCATION SKETCH

GENERAL PLAN
INTERSTATE 270 OVER
INTERSTATE 55
F.A.I. 270 SECTION 60-6HB
MADISON COUNTY
STA. 859+48.98
STRUCTURE NO. 060-0057 (E.B.)

PLOT DATE = #DATE#
FILE NAME = #FILE#