F.A.U. RTE.	SECTION	COUNTY	TOTAL SHEETS	SHEET NO.
1389	99-00062-00-PV	DUPAGE	199	117
CONTRACT NO. 83873				
FED. ROAD DIST. NO.	ILLINOIS	FED. AID PROJECT		

LUMINAIRE AND POLE SCHEDULE

LIGHT POLE ID	SYMBOL	ROADWAY LUMINAIRE MTG. HEIGHT	ROADWAY LUMINAIRE (MH)	ROADWAY LUMINAIRE ARM LENGTH	PEDESTRIAN LUMINAIRE METAL HALIDE	CIRCUIT NO.	CONTROLLER
P1	3	30'-9"	250W	12'-0"	50W	A	C1
P2	1	30'-9"	250W	12'-0"	-	B	C1
P3	3	30'-9"	250W	12'-0"	50W	A	C1
P4	1	30'-9"	250W	12'-0"	-	B	C1
P5	3	30'-9"	250W	12'-0"	50W	A	C1
P6	1	30'-9"	250W	12'-0"	-	B	C1
P7	3	30'-9"	250W	12'-0"	50W	A	C1
P8	1	30'-9"	250W	12'-0"	-	B	C1
P9	3	30'-9"	250W	12'-0"	50W	A	C1
P10	1	30'-9"	250W	12'-0"	-	B	C1
P11	3	30'-9"	250W	12'-0"	50W	C	C1
P12	1	30'-9"	250W	12'-0"	-	D	C1
P13	3	30'-9"	250W	12'-0"	50W	C	C1
P14	1	30'-9"	250W	12'-0"	-	D	C1
P15	3	30'-9"	250W	12'-0"	50W	C	C1
P16	1	30'-9"	250W	12'-0"	-	D	C1
P17	3	30'-9"	250W	12'-0"	50W	C	C1
P18	1	30'-9"	250W	12'-0"	-	D	C1
P19	3	30'-9"	250W	12'-0"	50W	C	C1
P20	1	30'-9"	250W	12'-0"	-	A	C2
P21	3	30'-9"	250W	12'-0"	50W	B	C2
P22	1	30'-9"	250W	12'-0"	-	A	C2
P23	3	30'-9"	250W	12'-0"	50W	B	C2
P24	1	30'-9"	250W	12'-0"	-	A	C2
P25	3	30'-9"	250W	12'-0"	50W	B	C2
P26	1	30'-9"	250W	12'-0"	-	A	C2
P27	3	30'-9"	250W	12'-0"	50W	B	C2
P28	1	30'-9"	250W	12'-0"	-	A	C2
P29	3	30'-9"	250W	12'-0"	50W	B	C2
P30	1	30'-9"	250W	12'-0"	-	C	C2
P31	3	30'-9"	250W	12'-0"	50W	D	C2
P32	1	30'-9"	250W	12'-0"	-	C	C2
P33	3	30'-9"	250W	12'-0"	50W	D	C2
P34	1	30'-9"	250W	12'-0"	-	C	C2
P35	3	30'-9"	250W	12'-0"	50W	D	C2
P36	1	30'-9"	250W	12'-0"	-	C	C2
P37	3	30'-9"	250W	12'-0"	50W	D	C2
P38	1	30'-9"	250W	12'-0"	-	C	C2
P39	1	30'-9"	250W	12'-0"	-	A	C3
P40	1	30'-9"	250W	12'-0"	-	B	C3
P41	3	30'-9"	250W	12'-0"	50W	A	C3
P42	1	30'-9"	250W	12'-0"	-	B	C3
P43	3	30'-9"	250W	12'-0"	50W	A	C3
P44	1	30'-9"	250W	12'-0"	-	B	C3
P45	3	30'-9"	250W	12'-0"	50W	A	C3
P46	1	30'-9"	250W	12'-0"	-	B	C3
P47	3	30'-9"	250W	12'-0"	50W	A	C3
P48	1	30'-9"	250W	12'-0"	-	B	C3
P49	3	30'-9"	250W	12'-0"	50W	A	C3
P50	1	30'-9"	250W	12'-0"	-	C	C3
P51	3	30'-9"	250W	12'-0"	50W	D	C3
P52	1	30'-9"	250W	12'-0"	-	C	C3
P53	3	30'-9"	250W	12'-0"	50W	D	C3
P54	1	30'-9"	250W	12'-0"	-	C	C3
P55	4	35'-9"	250W	15'-0"	50W	D	C3
P56	2	35'-9"	250W	15'-0"	-	C	C3
P57	4	35'-9"	250W	15'-0"	50W	A	C4
P58	2	35'-9"	250W	15'-0"	-	B	C4
P59	4	35'-9"	250W	15'-0"	50W	A	C4
P60	2	35'-9"	250W	15'-0"	-	B	C4
P61	4	35'-9"	250W	15'-0"	50W	A	C4
P62	2	35'-9"	250W	15'-0"	-	B	C4
P63	4	35'-9"	250W	15'-0"	50W	A	C4
P64	2	35'-9"	250W	15'-0"	-	B	C4
P65	4	35'-9"	250W	15'-0"	50W	C	C4
P66	2	35'-9"	250W	15'-0"	-	D	C4
P67	4	35'-9"	250W	15'-0"	50W	C	C4
P68	2	35'-9"	250W	15'-0"	-	D	C4
P69	4	35'-9"	250W	15'-0"	50W	C	C4
P70	2	35'-9"	250W	15'-0"	-	D	C4
P71	4	35'-9"	250W	15'-0"	50W	C	C4
P72	2	35'-9"	250W	15'-0"	-	D	C4
P73	4	35'-9"	250W	15'-0"	50W	C	C4
P74	2	35'-9"	250W	15'-0"	-	D	C4
P75	4	35'-9"	250W	15'-0"	50W	C	C4
P76	1	30'-9"	250W	12'-0"	-	B	C1
P77	1	30'-9"	250W	12'-0"	-	A	C2
P78	1	30'-9"	250W	12'-0"	-	C	C2
P79	1	30'-9"	250W	12'-0"	-	D	C2
P80	1	30'-9"	250W	12'-0"	-	B	C3
P81	1	30'-9"	250W	12'-0"	-	-	-

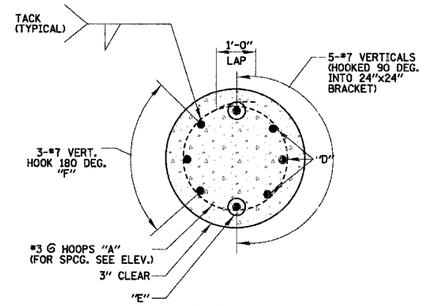

SECTION A-A

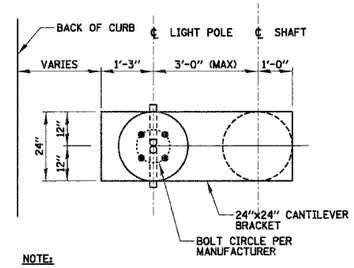

NOTE:

CENTERLINE OF POLE TO BE TYPICALLY LOCATED 3 FT. FROM THE BACK OF CURB (REFER TO LIGHTING PLANS FOR STATION/OFFSET).

PLAN-CANTILEVERED BRACKET

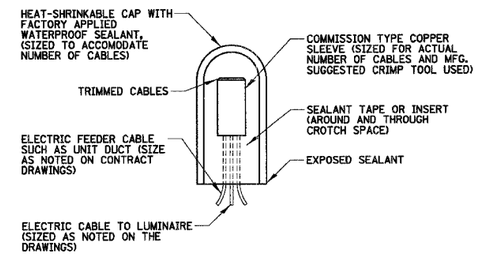

SPLICING ELECTRIC CABLE

N.T.S.

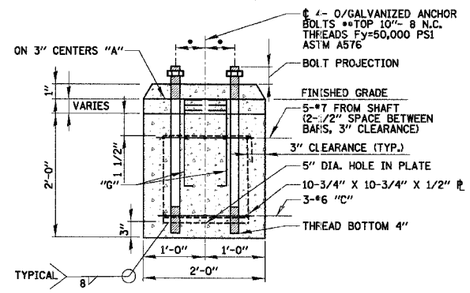

SECTION B-B

NOTES:

- * BOLT CIRCLE PER MANUFACTURER
- ** THE TOP OF THE ANCHOR BOLTS SHALL NOT PROJECT MORE THAN 4" ABOVE A 60" CHORD ALIGNED RADIALLY TO THE CENTERLINE OF THE ROADWAY, AND CONNECTING ANY POINT, WITHIN THE LENGTH OF THE CHORD, ON THE GROUND SURFACE ON ONE SIDE OF THE SUPPORT TO A POINT ON THE GROUND SURFACE ON THE OTHER SIDE.

1. CONCRETE SHALL BE 3500 PSI AT 14 DAYS
2. HOLE FOR FOUNDATION SHAFT SHALL BE AUGERED
3. REINFORCING BARS SHALL CONFORM TO BILLET STEEL BARS. (ASTM-A615) SPECIFICATIONS WITH A 6000 PSI MINIMUM YIELD STRENGTH.
4. FOUNDATION AS SHOWN REPRESENTS 13.5 LINEAL FEET FOR LIGHT POLE FOUNDATION, OFFSET, 24" DIAMETER.

NOTES:

1. BEFORE INSTALLATION OF BREAKAWAY BASE, USER SHOULD CONSULT WITH AUTHORIZED DISTRIBUTOR REGARDING USERS PROPOSED APPLICATION, LOAD REQUIREMENTS AND INSTALLATION METHODS. FAILURES CAN RESULT FROM USERS MISAPPLICATION OR IMPROPER INSTALLATION. TO APPROACH OPTIMUM STATIC LOADS, USE THE LARGEST POSSIBLE BOLT CIRCLES. SHIMS SHALL NOT BE USED.

BREAKAWAY TRANSFORMER BASE

N.T.S.

BILL OF MATERIALS				
QUAN.	MARK	SIZE	LENGTH	SHAPE
11	A	NO. 3	5'-9"	
6	B	NO. 3	6'-8"	
3	C	NO. 6	5-3 1/2"	
8	G	NO. 6	2'-1"	
3	D	NO. 7	13'-6"	
2	E	NO. 7	12'-0"	
3	F	NO. 7	9'-11"	
REINFORCING BARS LBS.				285
CLASS X CONCRETE CU. YDS.				1.7
ANCHOR BOLTS NO.				4
ANCHOR BOLT PLATE NO.				1

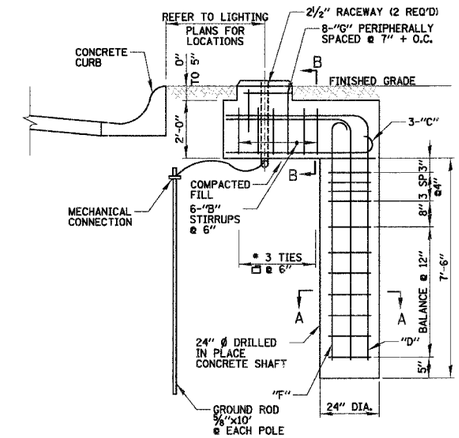

ELEVATION

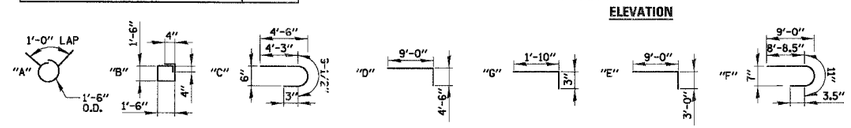

OFFSET CONCRETE FOUNDATION DETAIL

N.T.S.

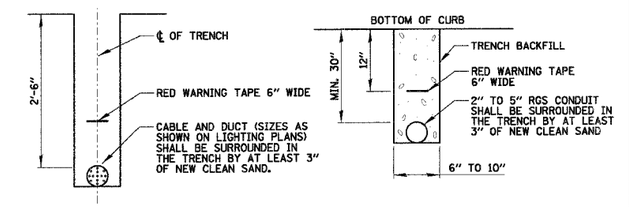

TRENCH CROSS SECTION

TRENCH SECTION

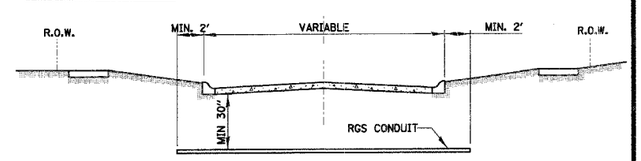

STREET CROSSING

① CONDUIT SHALL BE HEAVY WALL RGS CONDUIT.
② CONDUIT SHALL EXTEND A MINIMUM OF 2 FT. BEYOND BACK OF CURB.
③ CONDUIT SHALL BE A MINIMUM OF 30" BELOW CURB BOTTOM.

ELECTRIC CONDUIT UNDER PAVEMENT

N.T.S.

REVISIONS	
NAME	DATE

ILLINOIS DEPARTMENT OF TRANSPORTATION

LIGHTING DETAILS-3
HAWTHORNE LANE

SCALE: 50'

DATE 12/7/2006

DRAWN BY GAH
DESIGN BY GAH
CHECKED BY JPC

N:\WestChi\04479\04479.TBL

50' n:\westchi\04479\mech\04479_det3_alt1.dt