ROUTE NO.	SECTION	COUNTY	TOTAL SHEETS	SHEET NO.
FAP 0525	*	WINNEBAGO	157	31
FED. ROAD DIST. NO. 7		ILLINOIS	FED. AID PROJECT	

SHEET NO. 5
5 SHEETS

* 02-00518-00-BR

85399

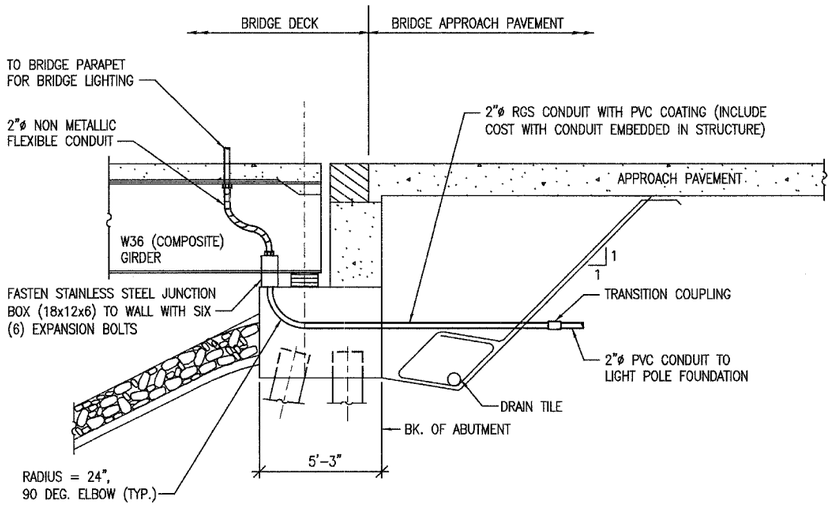

(HORIZ. DIM. @ RT. L'S)

SECTION THRU ABUTMENT

SCALE: NONE

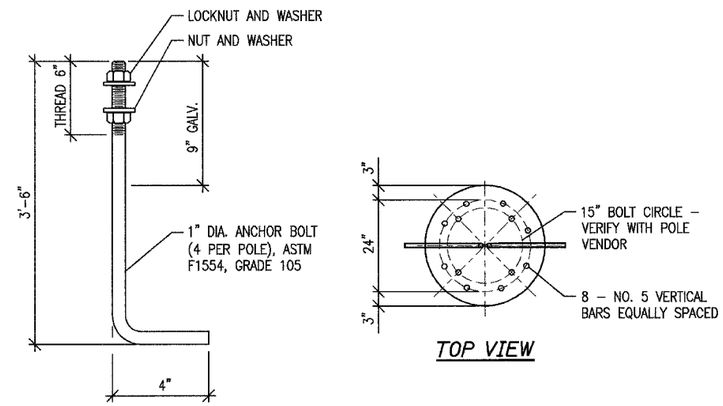

ANCHOR BOLT

TOP VIEW

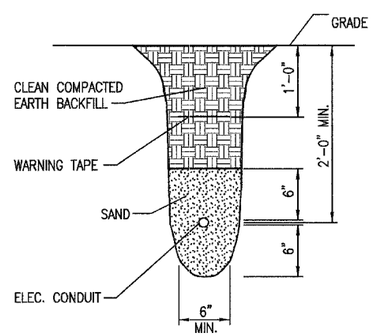

(IN NONPAVED AREAS)

TRENCH DETAIL

SCALE: NONE

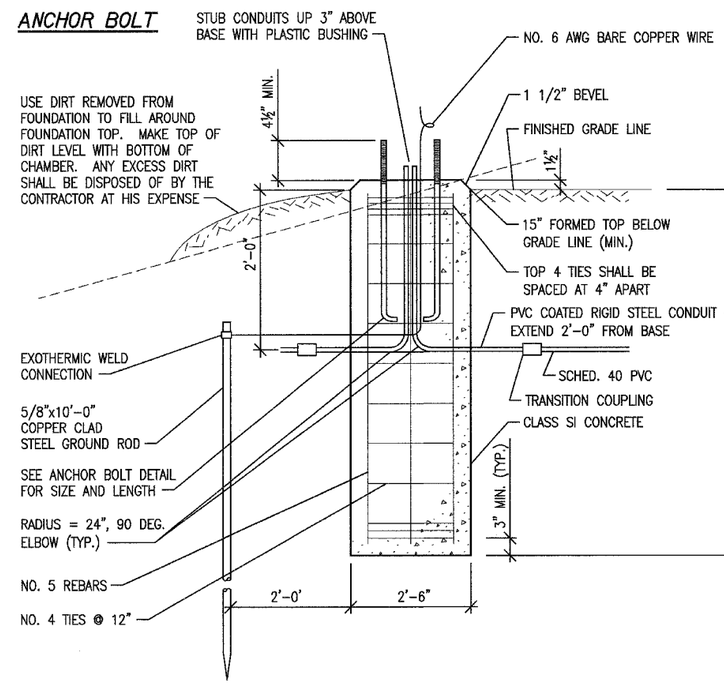

POLE FOUNDATION DETAIL

SCALE: NONE

Revised 2/15/07

Corporate License Number 184-001-084

ROADWAY/LIGHTING DETAILS

HARRISON AVENUE BRIDGE
OVER UP & CC&P RAILROAD
F.A.P. ROUTE 0525
SECTION 02-00518-00-BR
ROCKFORD, ILLINOIS
WESTBOUND STRUCTURE NO. 101-6109
EASTBOUND STRUCTURE NO. 101-6111

L5

© Copyright Hanson Professional Services Inc. 2005

HANSON

JOB NO. 03R1751
DATE 07/18/06

2:31:40 PM
02/12/2007, 02:31 PM
I:\03Jobs\03R1751\Struct\SteelLighting\Revisions 2-12-07\E-503.dgn

LAYOUT	PJT	07/14/06
DRAWN	ANC	07/14/06
REVIEWED	PJT	07/14/06