ROUTE NO.	SECTION	COUNTY	TOTAL SHEETS	SHEET NO.
FAP 0525	*	WINNEBAGO	157	75
FED. ROAD DIST. NO. 7	ILLINOIS	FED. AID PROJECT		

SHEET NO. 18
50 SHEETS

* 02-00518-00-BR

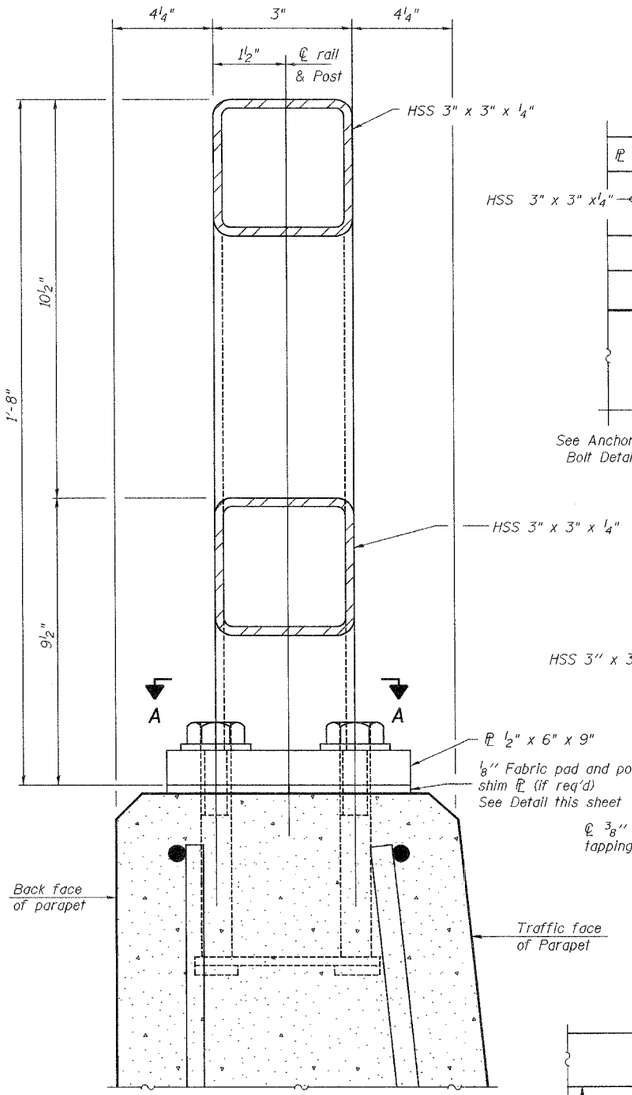

SECTION THRU RAILING

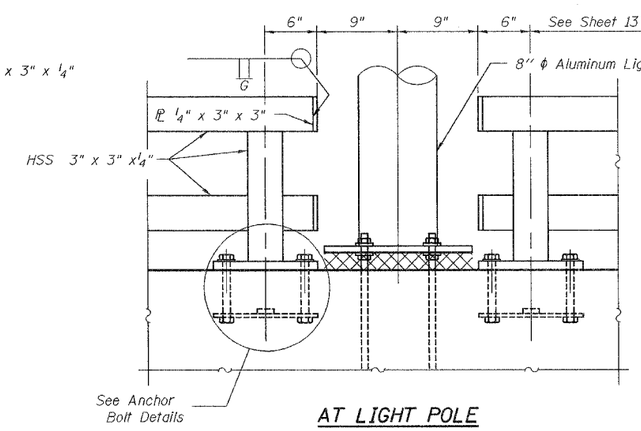

AT LIGHT POLE

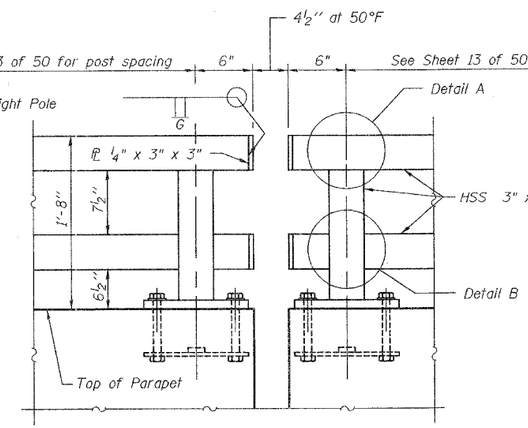

AT EXPANSION JOINT

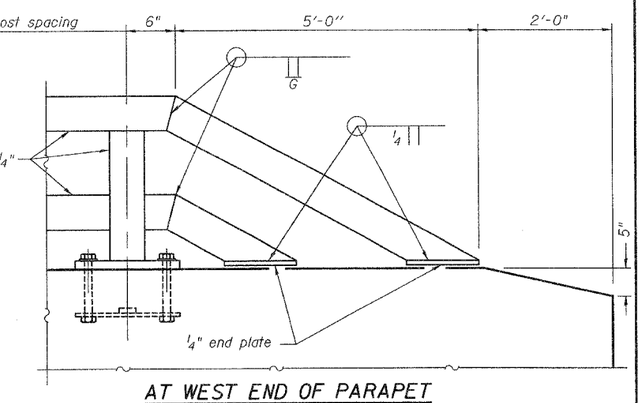

AT WEST END OF PARAPET

(East End Similar)

PARTIAL ELEVATION OF PARAPET RAILING

(Inside Face)

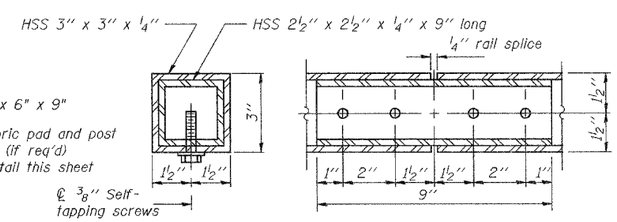

RAIL SPLICE

(Locations must be shown on shop drawings)

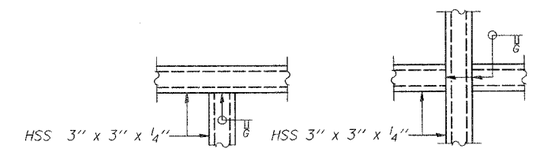

DETAIL A

DETAIL B

NOTES

Railing shall be according to Section 509 of the Standard Specifications, except as noted, and will be paid for at the contract unit price per foot for Parapet Railing.

Hollow structural sections shall conform to the requirements of ASTM designation A 500, Grade B, structural steel tubing.

All other steel shapes and plates shall conform to the requirements of AASHTO M270 Grade 36.

If the option of drilling and epoxy grouting the anchor rods is chosen, the Contractor shall use the capsule or the adhesive cartridge type anchor rods that have been previously tested and given a prior approval by the Department. The Contractor shall install these anchor rods in pre-drilled holes according to the manufacturer's recommendations and procedures. The capsule or the adhesive cartridge shall be sealed with pre-measured amounts of the adhesive chemical.

Space reinforcement to miss anchor rods.

All posts, railing, slices, anchor devices, and plates shall be galvanized after shop fabrication according to AASHTO M 111 and ASTM A 385. All bolts, nuts, washers, and anchor rods shall be galvanized according to AASHTO M 232 except stainless steel bolts as noted.

Vent holes for galvanizing shall be placed in the posts and rails at locations that will not allow the accumulation of moisture in the members.

Steel post shims maybe used under posts where required for alignment.

Fabricator shall account for roadway profile in fabricating the railing.

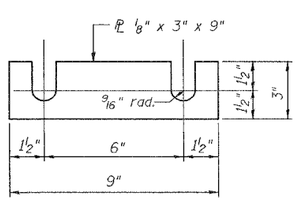

POST SHIM ℗ DETAIL

Shim plates shall be galvanized after shop fabrication according to AASHTO M232.

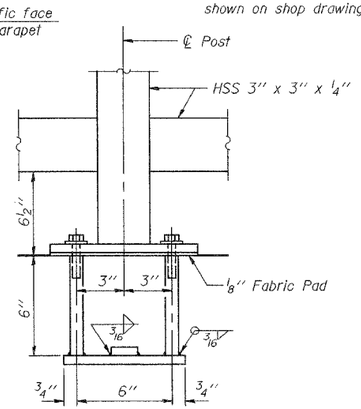

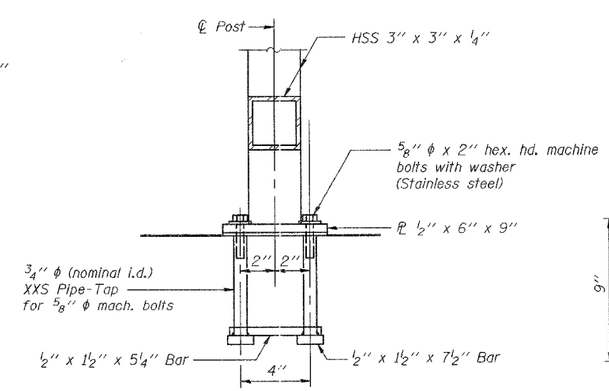

ANCHOR BOLT DETAILS

In lieu of the cast-in-place anchor device shown, the Contractor has the option of drilling and epoxy grouting ⅝" ϕ anchor rods. Embedment shall be according to the manufacturer's specifications.

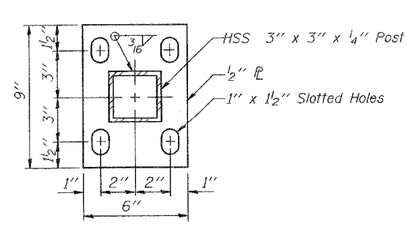

SECTION A-A BASE ℗

BILL OF MATERIAL

Item	Unit	Quantity
Parapet Railing	Foot	475

Corporate License Number 184-001-084

PARAPET STEEL RAILING

EASTBOUND HARRISON AVENUE
OVER UP & CC&P RAILROAD
F.A.P. ROUTE 0525
SECTION 02-00518-00-BR
ROCKFORD, ILLINOIS
STATION 95+72.00
STRUCTURE NO. 101-6111

© Copyright Hanson Professional Services Inc. 2006

HANSON

JOB NO. 03R1751
DATE 12/14/06

LAYOUT	MGM	09/01/05
DRAWN	MGM/JKR	07/24/06
REVIEWED	FLN	08/04/06

i:5508 PM
12\3:2006.01:55 PM
n103\dgns\03R175\Struct\Sheet\East Bound\S-018-EB-railing.dgn