ROUTE NO.	SECTION	COUNTY	TOTAL SHEETS	SHEET NO.
FAP 0525	*	WINNEBAGO	157	112
FED. ROAD DIST. NO. 7		ILLINOIS	FED. AID PROJECT	

* 02-00518-00-BR

SHEET NO. 5
50 SHEETS

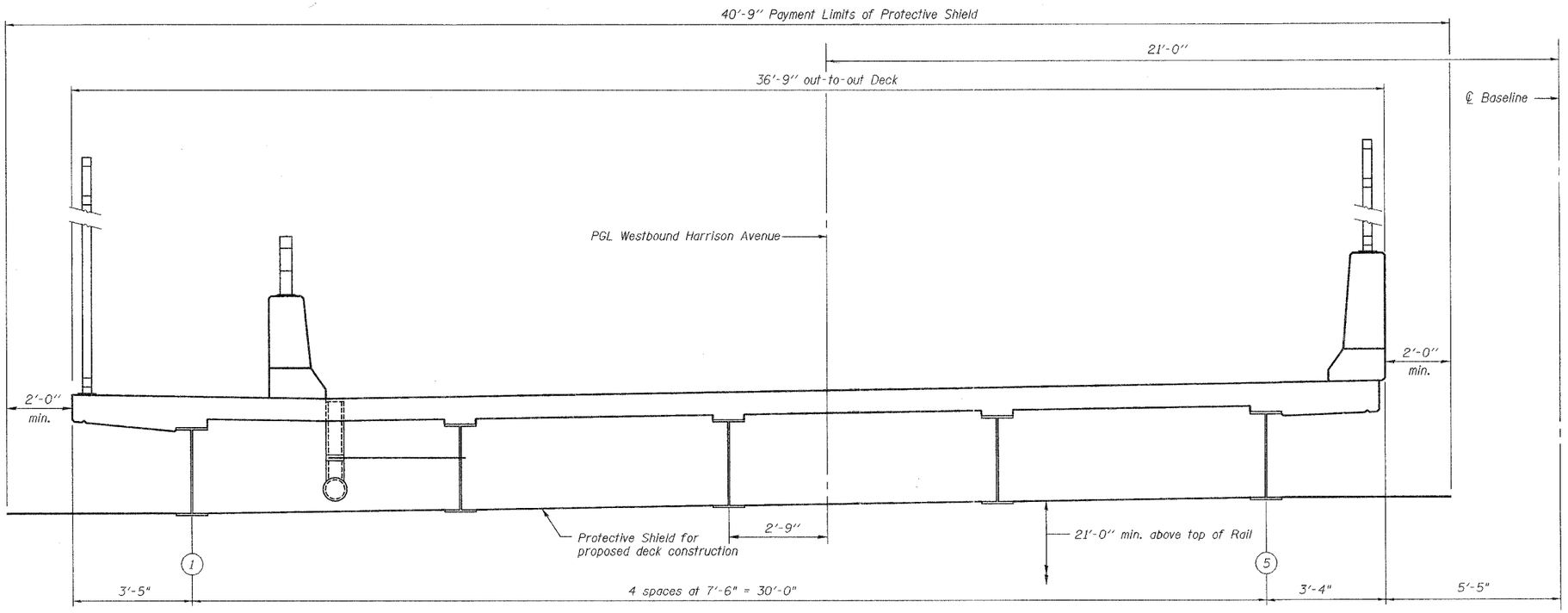

PROPOSED WESTBOUND CROSS SECTION

Looking East

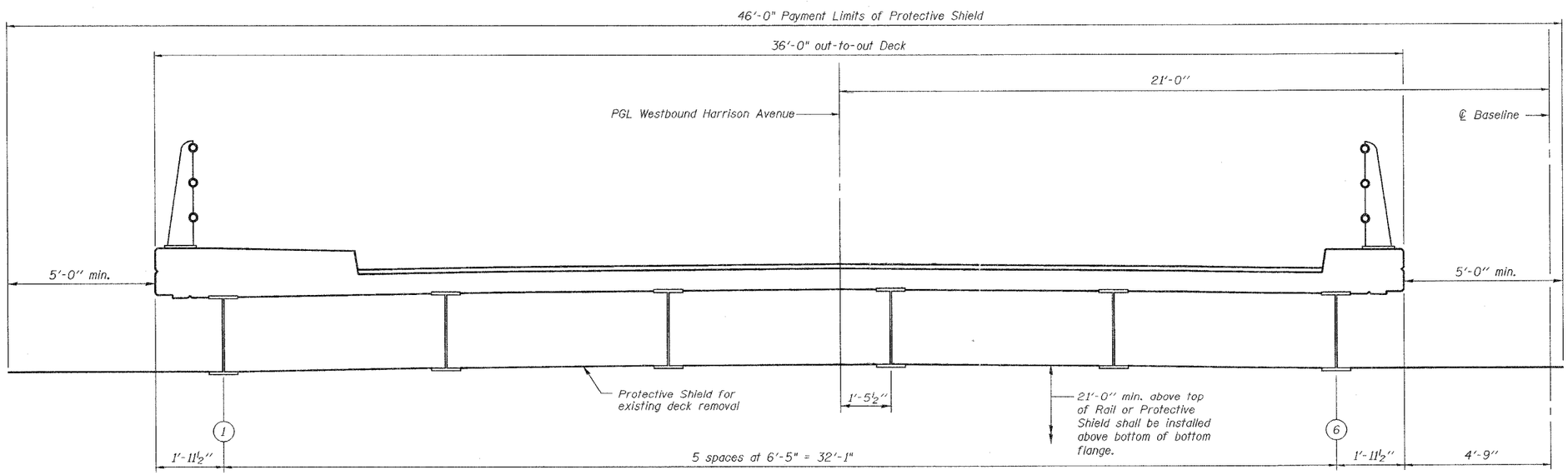

EXISTING WESTBOUND CROSS SECTION

Looking East

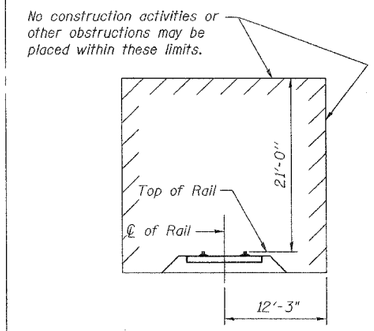

MINIMUM CONSTRUCTION CLEARANCES

(Normal to Railroad)

NOTES

The protective shield shall extend perpendicular from the railroad tracks at least 18 feet beyond the centerline of tracks.

The quantity of Protective Shield represents the quantity for four installations and removals, which are one installation and removal for deck and superstructure removal over UP railroad tracks, one installation and removal for deck and superstructure removal over CC&P railroad tracks, one installation and removal for proposed deck construction over UP railroad tracks, and one installation and removal for proposed deck construction over CC&P railroad tracks. Each installation of Protective Shield shall be measured for payment. Removal of Protective Shield shall not be measured for payment.

The Protective Shield shall be designed for a live load not less than 200 pounds per square foot.

If the Contractor intends to use cantilever forming brackets on the exterior beams for the protective shield, the beams shall be adequately braced to prevent twisting.

BILL OF MATERIAL

Item	Unit	Total
Protective Shield	Sq. Yd.	1038

Corporate License Number 184-001-084

PROTECTIVE SHIELD

WESTBOUND HARRISON AVENUE
OVER UP & CC&P RAILROAD
F.A.P. ROUTE 0525
SECTION 02-00518-00-BR
ROCKFORD, ILLINOIS
STATION 95+25.35
STRUCTURE NO. 101-6109

© Copyright Hanson Professional Services Inc. 2008

HANSON

JOB NO. 03R1751

DATE 12/14/06

LAYOUT	JKR	07/11/06
DRAWN	JKR	07/18/06
REVIEWED	FLN	08/02/06

10:46:47 AM
12/14/2006, 10:41 AM
I:\03Jobs\03R175\Struct\Sheet\West Bound\S-025-WB-ProtectShield.dgn