ROUTE NO.	SECTION	COUNTY	TOTAL SHEETS	SHEET NO.
FAP 0525	*	WINNEBAGO	157	127
FED. ROAD DIST. NO. 7	ILLINOIS	FED. AID PROJECT		

* 02-00518-00-BR

SHEET NO. 20
50 SHEETS

85399

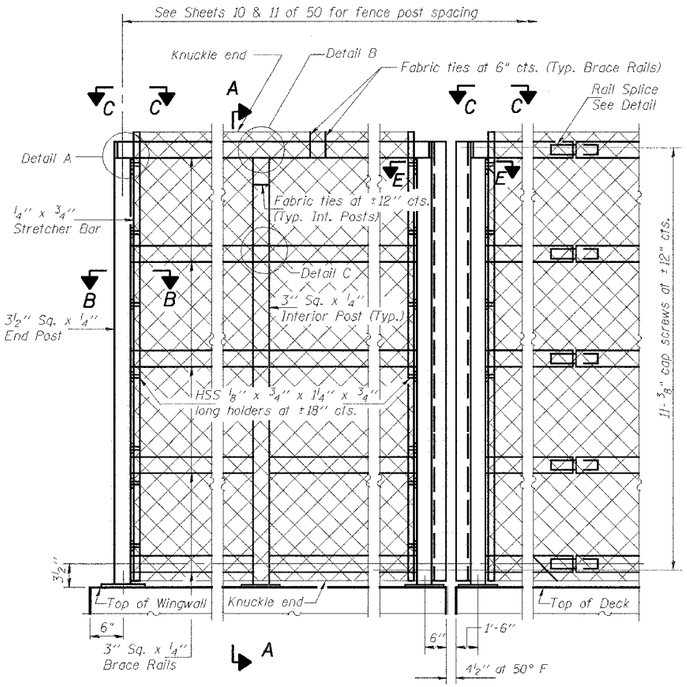

ELEVATION

(Inside Face)
(West End Shown. East End Similar)

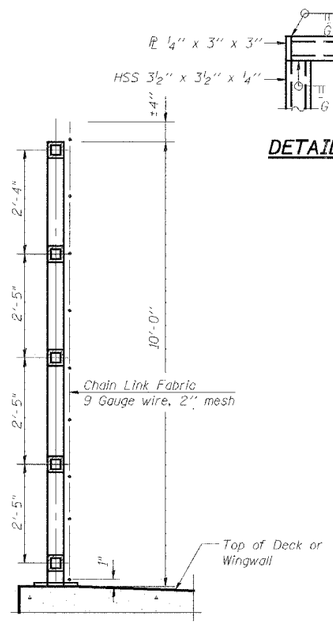

SECTION A-A

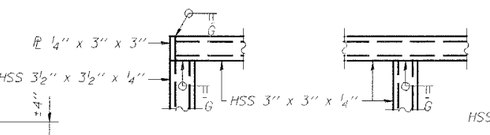

DETAIL A

DETAIL B

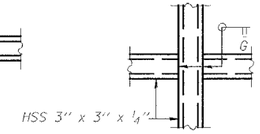

DETAIL C

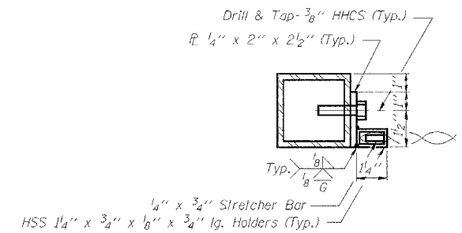

SECTION B-B

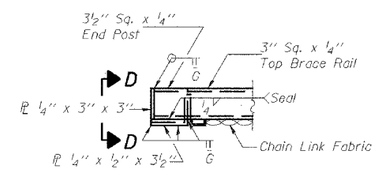

VIEW C-C

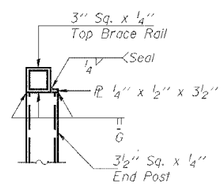

VIEW D-D

NOTES

Railing shall be according to Section 509 of the Standard Specifications, except as noted, and will be paid for at the Contract Unit Price per foot for Bridge Fence Railing (Sidewalk).

The 9 gauge fabric ties shall be according to Article 1006.27(d) of the Standard Specifications.

Installation of the chain link fabric shall be according to Section 664 of the Standard Specifications.

Hollow structural sections shall conform to the requirements of ASTM designation A 500, Grade B, structural steel tubing.

All other steel shapes and plates shall conform to the requirements of AASHTO M 270 Grade 36.

The chain link fabric shall be placed along pedestrian side as shown on Section A-A.

Stretcher bars shall be used at each end of fabric.

A minimum of one complete turn is required at ends of all fabric ties.

If the option of drilling and epoxy grouting the anchor rods is chosen, the Contractor shall use the capsule or the adhesive cartridge type anchor rods that have been previously tested and given a prior approval by the Department. The Contractor shall install these anchor rods in pre-drilled holes according to the manufacturer's recommendations and procedures. The capsule or the adhesive cartridge shall be sealed with pre-measured amounts of the adhesive chemical.

Space reinforcement to miss anchor rods.

All posts, railing, splices, anchor devices, and plates shall be galvanized after shop fabrication according to AASHTO M 111 and ASTM A 385. All bolts, nuts, washers, and anchor rods shall be galvanized according to AASHTO M 232 except stainless steel bolts as noted.

Vent holes for galvanizing shall be placed in the posts and rails at locations that will not allow the accumulation of moisture in the members.

The chain link fabric shall conform to the requirements of Article 1006.27(a)(1)a, b or c of the Standard Specifications.

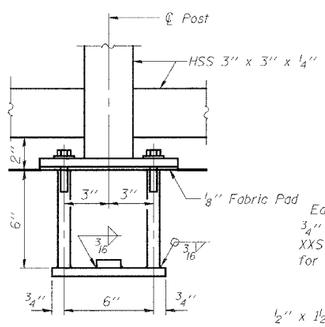

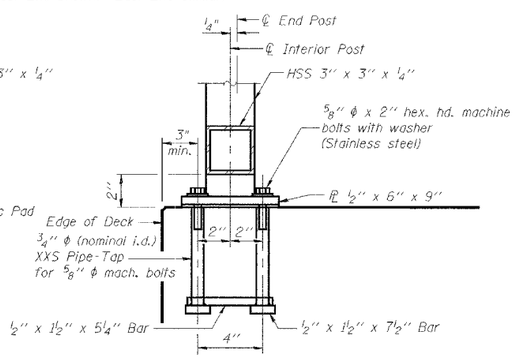

ANCHOR BOLT DETAILS

In lieu of the cast-in-place anchor device shown, the Contractor has the option of drilling and epoxy grouting 5/8" ϕ anchor rods. Embedment shall be according to the manufacturer's specifications.

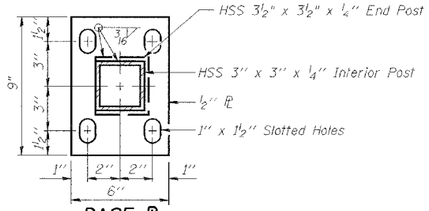

BASE PL

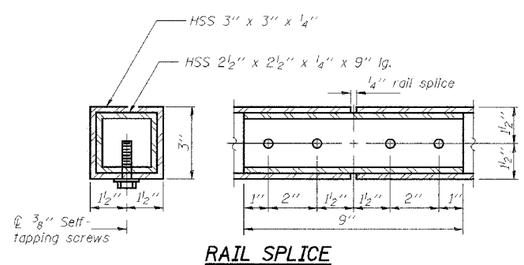

RAIL SPLICE

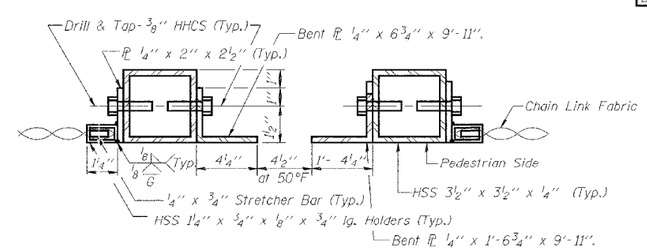

SECTION E-E

(At Expansion Joint)

BILL OF MATERIAL

Item	Unit	Quantity
Bridge Fence Railing (Sidewalk)	Foot	442

Corporate License Number 184-001-084

BRIDGE FENCE RAILING (SIDEWALK)

WESTBOUND HARRISON AVENUE
OVER UP & CC&P RAILROAD
F.A.P. ROUTE 0525
SECTION 02-00518-00-BR
ROCKFORD, ILLINOIS
STATION 95+25.35
STRUCTURE NO. 101-6109

© Copyright Hanson Professional Services Inc. 2006

HANSON

JOB NO. 03R1751
DATE 12/14/06

LAYOUT	JKB	04/11/06
DRAWN	MDM/JKB	07/13/06
REVIEWED	E.H.	08/02/06

926535 AM
0406 0707 09:06 AM
INDT\Jobs\03R1751\Struct\Sheet\West Bound\S-0120-WB-PedestrianFence.dgn