CONTRACT NO. 98950

F.A. RTE.	SECTION	COUNTY	TOTAL SHEETS	SHEET NO.
*	**	WILLIAMSON	917	73
STA.		TO STA.		
FED. ROAD DIST. NO.	ILLINOIS	FED. AID PROJECT		

* I-57, & OLD IL 13 (FAU 9629)
* * (X1-6-2)VB-2,(X1-6)HBK-2

TYPICAL SECTION - RAMP

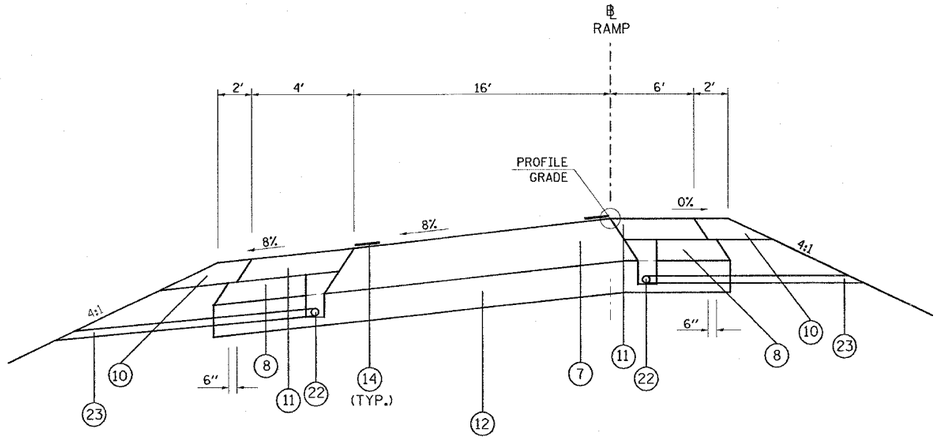

TO BE USED:

RAMP E: STA. 6+38 TO STA. 8+33
RAMP F: STA. 10+89 TO STA. 11+15

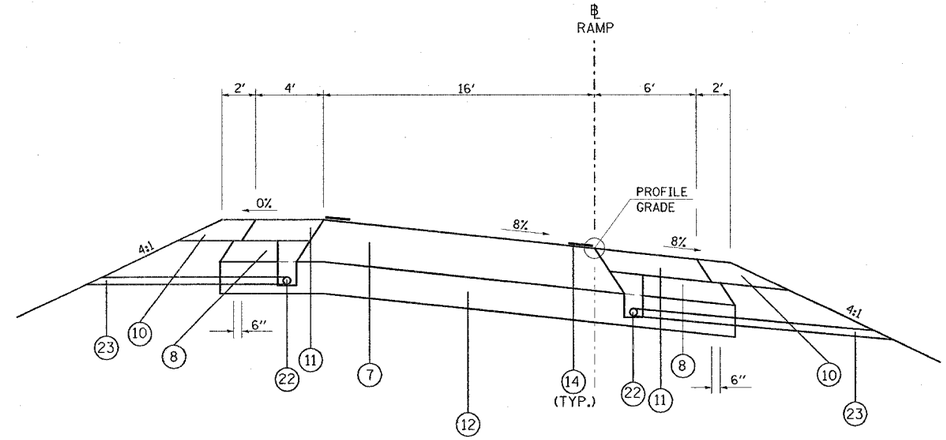

TO BE USED:

RAMP E: STA. 8+33 TO STA. 12+69 RAMP E = STA. 1519+58 ℄ I-57 NB
RAMP EE: STA. 9+00 TO STA. 14+25
RAMP F: STA. 4+40 TO STA. 10+89
RAMP FF: STA. 4+50 TO STA. 8+00 (RT. I-57 STA. 1526+82)

1. EXISTING CONCRETE PAVEMENT, 10"
2. EXISTING BITUMINOUS SHOULDERS 8"
3. EXISTING AGGREGATE BASE COURSE
4. EXISTING SUB-BASE GRANULAR MATERIAL TYPE A 6"
5. EXISTING COMBINATION CONCRETE CURB AND GUTTER
6. EXISTING BITUMINOUS RESURFACING
7. BITUMINOUS CONCRETE PAVEMENT (FULL DEPTH), SUPERPAVE, 14¼"
   POLYMERIZED BITUMINOUS CONCRETE SURFACE COURSE, SUPERPAVE, MIX. D, N105, 1½"
   POLYMERIZED BITUMINOUS CONCRETE BINDER COURSE, SUPERPAVE, IL-19.0, N105, 2¼"
   BITUMINOUS CONCRETE BINDER COURSE, SUPERPAVE, N90, 10½"
8. SUB-BASE GRANULAR MATERIAL, TYPE C
9. STABILIZED SUB-BASE 4"
10. AGGREGATE SHOULDERS, TYPE A, 8"
11. BITUMINOUS SHOULDERS SUPERPAVE, 8"
12. PROCESSING LIME MODIFIED SOILS 12"
13. POLYUREA PAVEMENT MARKING TYPE II - LINE 4"
14. THERMOPLASTIC PAVEMENT MARKING - LINE 4"
15. PORTLAND CEMENT CONCRETE PAVEMENT 10" (JOINTED)
16. PAVEMENT REMOVAL
17. COMBINATION CURB AND GUTTER REMOVAL
18. PAVED SHOULDER REMOVAL
19. COMBINATION CONCRETE CURB AND GUTTER, TYPE B-6.06
20. COMBINATION CONCRETE CURB AND GUTTER, TYPE B-6.24
21. CONCRETE MEDIAN SURFACE, 4 INCH
22. PIPE UNDERDRAINS 4"
23. PIPE UNDERDRAINS 4" (SPECIAL)
24. EXISTING BITUMINOUS RESURFACING (VARIES 4½" TO 5¼")
25. EXISTING 10" P.C.C. PAVEMENT, 1½" PARABOLIC CROWN
26. EXISTING 6" AGGREGATE SUB-BASE (4" ON RAMP "C")
27. BITUMINOUS SHOULDERS SUPERPAVE
28. BITUMINOUS CONCRETE BINDER COURSE, SUPERPAVE, IL-19.0, N90 9¾"
29. TEMPORARY PAINT PAVEMENT MARKING
30. RELOCATE TEMPORARY CONCRETE BARRIER
31. BITUMINOUS CONCRETE BINDER COURSE, SUPERPAVE, IL-19.0, N90 11"
32. BITUMINOUS CONCRETE BINDER COURSE, SUPERPAVE, IL-19.0, N90 12"
33. POLYMERIZED BITUMINOUS CONCRETE BINDER COURSE, SUPERPAVE, IL-19.0, N105 2¼"
34. STEEL PLATE BEAM GUARDRAIL, TYPE A
35. SUB-BASE GRANULAR MATERIAL 6"
36. BITUMINOUS CONCRETE BINDER COURSE, SUPERPAVE, IL-19.0, N90 5"
37. SUB-BASE GRANULAR MATERIAL 10"
38. BITUMINOUS CONCRETE BINDER COURSE, SUPERPAVE, IL-19.0, N90 (VAR)

NOTES:

1. REPLACE AGGREGATE SHOULDERS TYPE A 8" WITH BITUMINOUS SHOULDERS SUPERPAVE, 8" AT THE FOLLOWING LOCATIONS WHERE GUARDRAIL IS LOCATED.

   RAMP F: STA. 2+69 TO STA. 7+64
   RAMP FF: STA. 6+40 TO STA. 9+96
   RAMP E: STA. 8+53 TO STA. 14+72

2. SEE THE RAMP E-EE GEOMETRICS SHEET, RAMP F-FF GEOMETRICS SHEET FOR SUPER TRANSITIONS.
3. ALL RAMP PAVEMENT IS TO BE BUILT ON EARTH EMBANKMENT, SEE CROSS SECTIONS.

REVISIONS NAME	DATE

ILLINOIS DEPARTMENT OF TRANSPORTATION

TYPICAL SECTIONS - RAMPS

SCALE: VERT. HORIZ. NO SCALE
DATE
DRAWN BY CNH
CHECKED BY

PLOT DATE = 11/30/2006
FILE NAME = c:\pwworking\d02\d0802\old13\old13bil.dgn
PLOT SCALE = 50.0000 ' / IN.
USER NAME = hawdon