CONTRACT NO. 98950

F.A. RTE.	SECTION	COUNTY	TOTAL SHEETS	SHEET NO.
*	**	WILLIAMSON	917	813
STA.		TO STA.		
FED. ROAD DIST. NO.	ILLINOIS	FED. AID PROJECT		

* I-57, & OLD IL 13 (FAU 9629)
** (X1-6-2)VB-2,(X1-6)HBK-2

DETAILS OF INLET SPECIAL, TYPE 3, 5 FEET AND 6 FEET

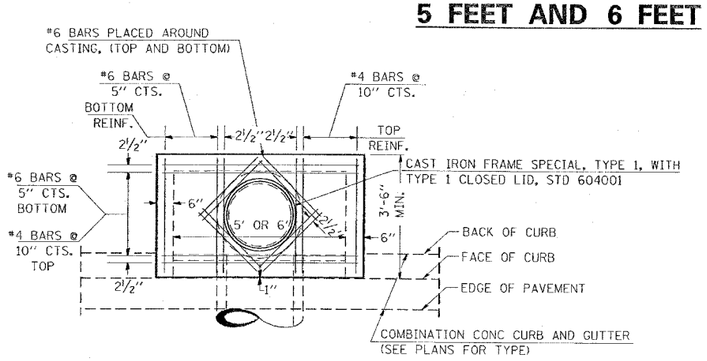

PLAN

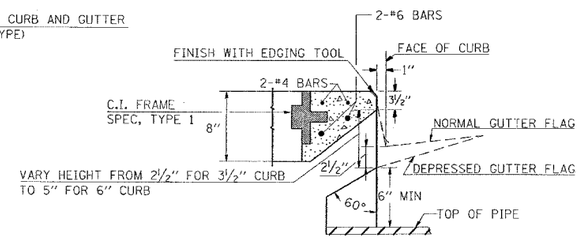

SECTION A-A

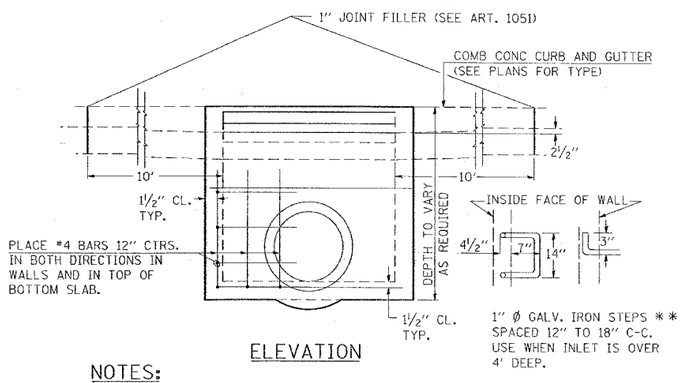

ELEVATION

DESIGN	PIPE DIA	"D"
A	18"&LESS	2'-6"
B	21"&24"	3'-0"
C	27"&30"	3'-7"
D	33"&36"	4'-2"
E	42"	4'-9"
F	48"	5'-0"
G	54"	6'-1"

NOTES:

PROVIDE 1½" CLEARANCE TYP. ALL REINFORCEMENT UNLESS OTHERWISE SPECIFIED.

CLASS SI CONCRETE SHALL BE USED THROUGHOUT. SET FACE OF INLET 1" BEHIND FACE OF CURB. DEPRESS GUTTER FLOWLINE AT INLET 2½" BELOW NORMAL GUTTER FLOWLINE. CONSTRUCT TRANSITION IN FLOWLINE IN 10 FEET EACH SIDE OF INLET. PIPES TO BE CONNECTED TO INLET AS SHOWN ON STORM SEWER LAYOUT.

INLETS WILL BE PAID FOR AT THE CONTRACT UNIT PRICE EACH FOR **INLET, SPECIAL, TYPE 3, 5 FEET** OR **INLET, SPECIAL, TYPE 3, 6 FEET** WHICH PRICE SHALL INCLUDE THE CAST IRON FRAME, SPECIAL, TYPE 1 WITH TYPE 1 CLOSED LID, THE REINFORCEMENT BARS, METAL STEPS AND JOINT FILLER.

**THE GALVONIZED IRON STEPS AS DETAILED HEREON ARE TYPICAL. STEPS OF OTHER DESIGN AND MATERIAL THAT WILL CONFORM TO THE MINIMUM REQUIREMENTS OF THE STEPS SHOWN, MAY BE USED WHEN APPROVED BY THE ENGINEER.

IF THE INLET IS NOT CAST IN PLACE THEN THE INLET SHALL BE PRODUCED ACCORDING TO THE DEPARTMENT'S CURRENT POLICY MEMORANDUM, "QUALITY CONTROL/QUALITY ASSURANCE PROGRAM FOR PRECAST CONCRETE PRODUCTS".

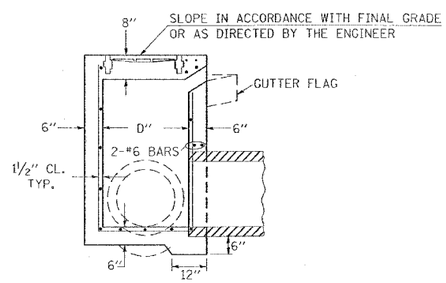

SECTION

REVISIONS	
REDRAWN	2-15-89
REVISED	8-15-94
REVISED	1-19-99
REVISED	5-6-04

STD. 9-1

DETAILS OF INLET SPECIAL, TYPE 3, WITH OPENING BEHIND CURB

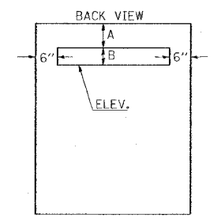

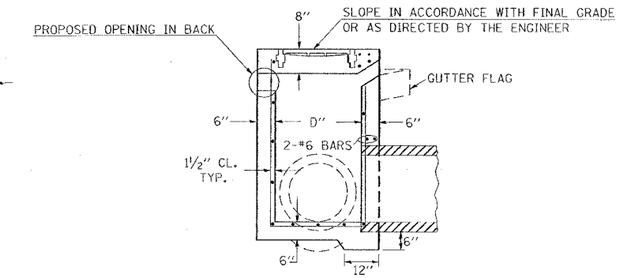

SECTION

STA.	DISTANCE A	DISTANCE B	ELEV.
775+60	6"	7"	447.96
776+25	6"	7"	448.20
778+00	6"	7"	449.00
779+25	6"	7"	449.60
780+50	9"	7"	450.10

TO BE USED:
RT. STA. 775+60
RT. STA. 776+25
RT. STA. 778+00
RT. STA. 779+25
RT. STA. 780+50

DETAIL OF CONCRETE THRUST BLOCK FOR CONCRETE PIPE CULVERT

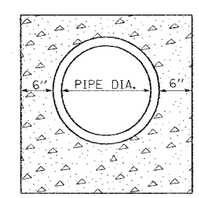

SECTION A-A

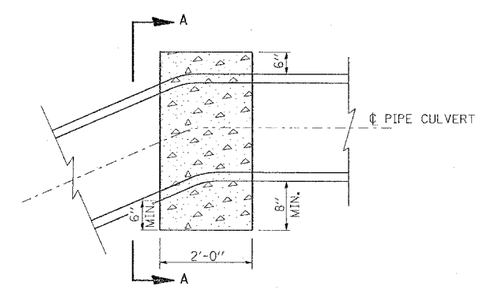

CONCRETE THRUST BLOCKS SHALL BE CONSTRUCTED AND PAID FOR IN ACCORDANCE WITH ARTICLES 609.06 AND 609.07 OF THE STANDARD SPECIFICATIONS. CLASS SI CONCRETE SHALL BE USED THROUGHOUT.

REVISIONS	
NAME	DATE

ILLINOIS DEPARTMENT OF TRANSPORTATION

DETAILS:

INLET SPECIAL, TYPE 3, 5 FEET AND 6 FEET; INLET SPECIAL, TYPE 3, WITH OPENING BEHIND CURB; CONCRETE THRUST BLOCK FOR CONCRETE PIPE CULVERT

SCALE: VERT. NONE HORIZ.
DATE
DRAWN BY CNH
CHECKED BY EES

PLOT DATE = 10/14/2006
FILE NAME = c:\pwworking\eh\d02802\ustd13\ustd13s3.dgn
PLOT SCALE = 50.0000 ' / IN.
USER NAME = headon