03-09-12 LETTING ITEM 012

F.A.U. RTE.	SECTION	COUNTY	TOTAL SHEETS	SHEET NO.
1566	29 R-N-1	COOK	120	1
	ILLINOIS	CONTRACT NO. 62377		

STATE OF ILLINOIS

DEPARTMENT OF TRANSPORTATION

DIVISION OF HIGHWAYS

PROPOSED HIGHWAY PLANS

F.A.U. 1566 (95th ST.) AT 104th AVE./FLAVIN RD. INTERSECTION RECONSTRUCTION AND TRAFFIC SIGNAL INSTALLATION

SECTION: 29 R–N–1

PROJECT: CMM-1566(004)

COOK COUNTY

C–91–026–02

FOR INDEX OF SHEETS, SEE SHEET NO. 2

PROJECT LOCATED IN PALOS TOWNSHIP

TRAFFIC DATA:

95th St.
SPEED LIMIT – 40 MPH
2000 ADT – 11000
2020 ADT – 14000

104th AVE.
SPEED LIMIT – 40 MPH
2000 ADT – 8500
2020 ADT – 11000

FLAVIN RD.
SPEED LIMIT – 50 MPH
2000 ADT – 8500
2020 ADT – 11000

D–91–026–02

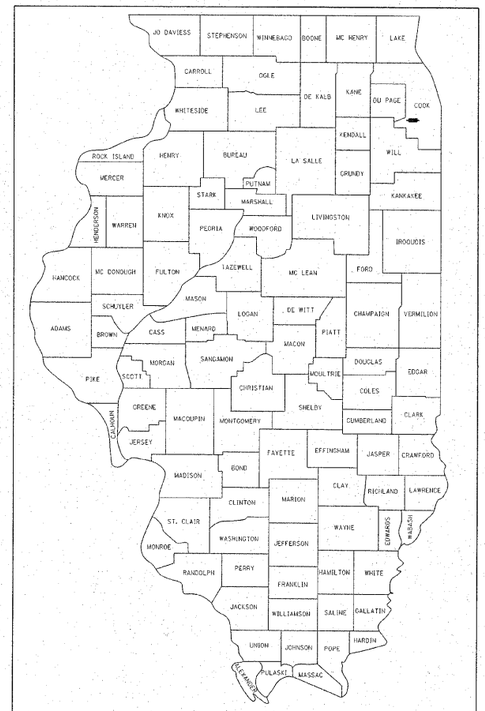

LOCATION OF SECTION INDICATED THUS:–

R. 12 E.

T. 37 N.

95th ST.
PROJECT BEGINS
STA. 17 + 38.6

104th AVE.
PROJECT BEGINS
STA. 206 + 21.2

FLAVIN RD.
PROJECT ENDS
STA. 224 + 00

95th ST.
PROJECT ENDS
STA. 35 + 00

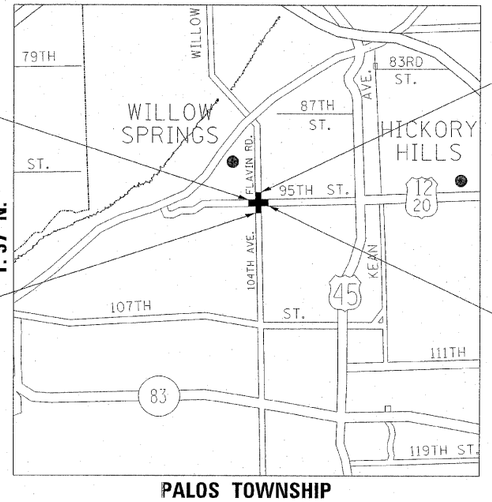

PALOS TOWNSHIP

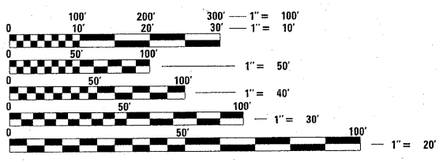

FULL SIZE PLANS HAVE BEEN PREPARED USING STANDARD ENGINEERING SCALES. REDUCED SIZED PLANS WILL NOT CONFORM TO STANDARD SCALES. IN MAKING MEASUREMENTS ON REDUCED PLANS, THE ABOVE SCALES MAY BE USED.

J.U.L.I.E.
JOINT UTILITY LOCATION INFORMATION FOR EXCAVATION
1–800–892–0123
OR 811

STATE OF ILLINOIS
DEPARTMENT OF TRANSPORTATION
DIVISION OF HIGHWAYS

SUBMITTED August 23, 20 11
Diane M. O'Keefe
DEPUTY DIRECTOR OF HIGHWAYS, REGION ENGINEER

February 3 20 12
John D. Baranzelli, P.E. for
acting ENGINEER OF DESIGN AND ENVIRONMENT

February 3 20 12
William R. Frey for
acting DIRECTOR OF HIGHWAYS, CHIEF ENGINEER

PROJECT ENGINEER: JENPAI CHANG (847) 705–4432
PROJECT MANAGER: KEN ENG (847) 705–4247

95th ST.: GROSS AND NET LENGTH OF PROJECT – 1762 LIN FT – .33 MI
104th AVE./FLAVIN RD.: GROSS AND NET LENGTH OF PROJECT – 1779 LIN FT – .34 MI

PRINTED BY THE AUTHORITY OF THE STATE OF ILLINOIS

CONTRACT NO. 62377

INDEX OF SHEETS

SHEET NO.	DESCRIPTION
1	COVER SHEET
2-3	INDEX OF SHEETS, STATE STANDARDS, AND GENERAL NOTES
4-6	SUMMARY OF QUANTITIES
7-10	EXISTING AND PROPOSED TYPICAL SECTIONS
11	MIXTURE REQUIREMENT TABLE AND QUANTITY SCHEDULE
12	ALIGNMENT AND TIES
13	BENCHMARK INFORMATION
14-17	EXISTING AND PROPOSED ROADWAY PLANS
18-29	SUGGESTED STAGING AND TRAFFIC CONTROL PLANS
30-31	EROSION CONTROL PLANS
32-35	EXISTING AND PROPOSED DRAINAGE PLANS
36-37	S.U.E. UTILITY SHEETS
38-39	PLAT OF HIGHWAYS
40-41	PAVEMENT MARKING PLAN
42-43	LANDSCAPING PLAN
44-45	TREE REMOVAL PLAN
46-48	TRAFFIC SIGNAL INSTALLATION PLAN
49-50	DETOUR PLAN
51-56	RETAINING WALL PLAN AND STRUCTURE BORING INFORMATION
57-58	WETLAND LOCATIONS AND IMPACTS
59-60	CULVERT CROSSING DETAILS
61-67	DROP INLET BOX AND HEADWALL DETAILS
68-71	SOIL PLAN AND PROFILE
72-73	SOIL BORING INFORMATION
74	DRIVEWAY DETAILS - DISTANCE BETWEEN R.O.W. AND CURB OR EDGE GREATER THAN OR EQUAL TO 15 FT. (4.5 m)
75	DRIVEWAY DETAILS - DISTANCE BETWEEN R.O.W. AND FACE OF CURB IS LESS THAN OR EQUAL TO 15 FT. (4.5 m)
76	MANHOLE WITH RESTRICTOR PLATE
77	DROP MANHOLE DETAILS
78	RUSTICATION FINISH AND GEOCOMPOSITE DRAIN FOR RETAINING WALLS
79	CONCRETE BARRIER PIER AND SLOPE WALL PROTECTION DETAIL
80	DETAIL FOR DEPRESSED CURB AND GUTTER AND SHOULDER TREATMENT AT TBT TYPE I (SPECIAL)
81	BENCHING DETAIL FOR EMBANKMENT WIDENING
82	TEMPORARY AERIAL CABLE INSTALLATION
83	PRUNING FOR SAFETY AND EQUIPMENT CLEARENCE
84-87	REMOVE AND RE-ERECT STEEL PLATE BEAM GUARDRAIL
88	TRAFFIC CONTROL AND PROTECTION FOR SIDE ROADS, INTERSECTIONS, AND DRIVEWAYS
89	RAISED REFLECTIVE PAVEMENT MARKERS (SNOW PLOW RESISTANT)
90	DISTRICT ONE TYPICAL PAVEMENT MARKINGS
91	TEMPORARY PAVEMENT MARKING--LETTERS AND SYMBOLS FOR TRAFFIC STAGING
92	SIGNING FOR FLAGGING OPERATIONS AT WORK ZONE OPENINGS
93	DETOUR SIGNING FOR CLOSING STATE HIGHWAYS
94	DRIVEWAY ENTRANCE SIGNING
95	DISTRICT ONE MAST ARM MOUNTED STREET NAME SIGNS
96	HANDHOLE TO INTERCEPT EXISTING CONDUIT
97-99	POST MOUNTED FLASHING BEACON WITH PRECIPITATION DETECTOR
100-105	STANDARD TRAFFIC SIGNAL DESIGN DETAILS
106-107	EMERGENCY VEHICLE PREEMPTION SEQUENCE OF OPERATION - MAIN STREET AND CROSS STREET
108	ARTERIAL ROAD INFORMATION SIGNING
109-120	CROSS SECTIONS

STATE STANDARDS

000001-06 STANDARD SYMBOLS, ABBREVIATIONS AND PATTERNS

001001-02 AREAS OF REINFORCEMENT BARS

280001-06 TEMPORARY EROSION CONTROL SYSTEMS

406201-01 MAILBOX TURNOUT

482001-02 HMA SHOULDER ADJACENT TO FLEXIBLE PAVEMENT

482006-03 HMA SHOULDER ADJACENT TO RIGID PAVEMENT

542101-02 REINFORCED CONCRETE END SECTIONS FOR PIPE CULVERTS 15 IN. (375mm) THRU 36 IN. (900mm) DIAMETER AT 48 IN. (1200mm) AT RIGHT ANGLES WITH ROADWAY

542301-03 PRECAST REINFORCED CONCRETE FLARED END SECTIONS

542306-02 PRECAST REINFORCED CONCRETE ELLIPTICAL FLARED END SECTIONS

542311-03 GRATING FOR CONCRETE FLARED END SECTIONS (FOR 24IN (600mm) THRU 54IN (1300mm) PIPE)

630001-10 STEEL PLATE BEAM GUARDRAIL

630201-06 PCC/ HMA STABILIZATION AT STEEL PLATE BEAM GUARDRAIL

630301-05 SHOULDER WIDENING FOR TYPE 1, (SPECIAL) GUARDRAIL TERMINAL

631011-08 TRAFFIC BARRIER TERMINAL, TYPE 2

635006-03 REFLECTOR AND TERMINAL MARKER PLACEMENT

635011-02 REFLECTOR MARKER AND MOUNTING DETAILS

642001-02 SHOULDER RUMBLE STRIPS

666001-01 RIGHT-OF-WAY MARKERS

667101-02 PERMANENT SURVEY MARKERS

701001-02 OFF-ROAD OPERATION 2L, 2W, 15FT (4.5 m) MIN. AWAY FOR SPEEDS > 45 MPH

701006-03 OFF ROAD OPERATIONS 2L, 2W, 15FT (4.5 m) TO PAVEMENT EDGE

701011-02 OFF-ROAD MOVING OPERATIONS 2L, 2W, DAY ONLY

701301-04 LANE CLOSURE, 2L, 2W, SHORT TIME OPERATIONS

701306-03 LANE CLOSURE, 2L, 2W SLOW MOVING OPERATIONS - DAY ONLY FOR SPEEDS > 45 MPH

701311-03 LANE CLOSURE, 2L, 2W MOVING OPERATIONS - DAY ONLY

701326-04 LANE CLOSURE, 2L, 2W PAVEMENT WIDENING FOR SPEEDS > 45 MPH

701501-06 URBAN LANE CLOSURE, 2L, 2W, UNDIVIDED

701901-02 TRAFFIC CONTROL DEVICES

704001-07 TEMPORARY CONCRETE BARRIER

780001-03 TYPICAL PAVEMENT MARKINGS

781001-03 TYPICAL APPLICATION RAISED REFLECTIVE PAVEMENT MARKERS

805001-01 ELECTRICAL SERVICE INSTALLATION DETAILS

814001-02 CONCRETE HANDHOLES

STATE STANDARDS (CONT.)

873001-02 TRAFFIC SIGNAL GROUNDING AND BONDING

877001-05 STEEL MAST ARM ASSEMBLY AND POLE 16FT THRU 55FT

878001-09 CONCRETE FOUNDATION DETAILS

880006-01 TRAFFIC SIGNAL MOUNTING DETAILS

886001-01 DECTECTOR LOOP INSTALLATIONS

886006-01 TYPICAL LAYOUT FOR DETECTION LOOPS

COMMITMENTS

1. A TEMPORARY RETAINING WALL SHALL BE BUILT THREE FEET INSIDE THE RIGHT-OF-WAY LINE TO MINIMIZE WETLAND IMPACTS.
2. A FINAL RETAINING WALL SHALL BE BUILT SIX FEET TOWARD THE ROADWAY, IN FROM THE RIGHT-OF-WAY LINE.
3. BUCKTHORN REMOVAL SHALL OCCUR DURING CONSTRUCTION
4. A LANDSCAPING PLAN INCORPORATING PLANT SPECIES AMENABLE TO THE LITTLE RED SCHOOL HOUSE NATURAL AREAS INVENTORY SITE SHALL BE IMPLEMENTED.
5. ALL WETLANDS AND THE LITTLE RED SCHOOL HOUSE NATURAL AREAS INVENTORY SITE SHALL BE IDENTIFIED AS "NO-INTRUSION ZONES" IN ORDER TO PREVENT UNINTENDED IMPACTS DURING CONSTRUCTION. THESE SITES CANNOT BE USED FOR ANY REASON, WITH THE EXCEPTION OF THE KNOWN .056 ACRES OF IMPACT TO WETLAND SITE 1.

GENERAL NOTES

BEFORE STARTING ANY EXCAVATION THE CONTRACTOR SHALL CALL "JULIE" AT 800-892-0123 OR "CUAN" (CHICAGO UTILITY ALERT NETWORK) AT 312-744-7000 FOR FIELD LOCATIONS OF BURIED ELECTRIC, TELEPHONE AND GAS FACILITIES, (48 HOURS NOTIFICATION IS REQUIRED).

10 FEET (3 METERS) TRANSITIONS SHALL BE USED TO MATCH PROPOSED CURB AND GUTTER AND MEDIAN ITEMS OF WORK TO EXISTING CURBS AND GUTTERS AND MEDIANS IN THE FIELD, UNLESS OTHERWISE SHOWN. THE TRANSITION SHALL BE PAID FOR AT THE CONTRACT UNIT PRICE FOR THE PROPOSED ITEMS OF WORK SPECIFIED.

THE CONTRACTOR SHALL COORDINATE CONSTRUCTION ACTIVITIES WITH THE UTILITY COMPANIES AND THE VILLAGE OF WILLOW SPRINGS.

THE CONTRACTOR WILL NOT BE ALLOWED TO SET UP A YARD OR FIELD OFFICE ON STATE PROPERTY WITHOUT WRITTEN PERMISSION FROM THE DEPARTMENT.

THE REMOVAL OF GUARDRAIL TERMINAL SECTIONS SHALL BE INCLUDED IN THE UNIT PRICE PER LINEAL FOOT FOR "STEEL PLATE BEAM GUARDRAIL REMOVAL."

DRAINAGE ADJUSTMENT OR RECONSTRUCTION LOCATIONS WILL BE DETERMINED BY THE ENGINEER.

THE CONTRACTOR SHALL CONTACT THE DISTRICT ONE TRAFFIC CONTROL CENTER AT (847) 705-4470 A MINIMUM OF 72 HOURS PRIOR TO START OF WORK.

PERMANENT PAVEMENT MARKINGS SHALL BE THERMOPLASTIC (OF THE EXTRUDED TYPE) AND SHOULD BE PLACED IN ACCORDANCE TO THE "DISTRICT ONE TYPICAL PAVEMENT MARKINGS".

RAISED REFLECTIVE PAVEMENT MARKERS SHALL BE IN ACCORDANCE WITH THE DISTRICT ONE "TYPICAL APPLICATION RAISED REFLECTIVE PAVEMENT MARKERS" DETAIL.

THE RESIDENT ENGINEER SHOULD CONTACT MS. PATRICE HARRIS, AREA TRAFFIC ENGINEER, AT (708) 597-9800 PRIOR TO PLACING ANY PAVEMENT MARKINGS.

PAVEMENT MARKING TAPE, TYPE III SHALL BE USED FOR SHORT TERM PAVEMENT MARKINGS ON ALL FINAL SURFACES. THE COST OF THE PAVEMENT MARKING TAPE, AND ITS REMOVAL SHALL BE INCLUDED IN THE COST OF SHORT TERM PAVEMENT MARKING.

THE CONTRACTOR WILL BE REQUIRED TO KEEP A RECORD OF THE LOCATIONS OF THE BURIED STRUCTRES ACCORDING TO THE STATION AND DISTANCE LEFT OR RIGHT OF THE CENTERLINE OF PAVEMENT. UPON COMPLETION OF THE WORK, THE CONTRACTOR WILL DELIVER THE RECORD TO THE ENGINEER.

ABANDONED SEWERS SHALL BE PLUGGED WITH SI MORTAR, OR BRICK AND SUITABLE MATERIAL TO THE SATISFACTION OF THE ENGINEER AS SPECIFIED IN ARTICLE 550.05 OF THE STANDARD SPECIFICATION FOR ROAD AND BRIDGE CONSTRUCTION AND SHALL NOT BE PAID FOR SEPARATELY, BUT WILL BE CONSIDERED AS INCLUDED IN THE UNIT PRICE PER LINEAR FEET OF THE STORM SEWER REMOVAL WITH THE SIZE SPECIFIED.

BEFORE BEGINNING ANY WORK, THE CONTRACTOR SHALL RETAIN AND RECORD FOR FUTURE REFERENCE, ALL EXISTING PAVEMENT MARKING LINES (AND RAISED REFLECTIVE MARKINGS) IN ORDER THAT THESE LOCATIONS CAN BE RE-ESTEABLISHED FOR STRIPING. EXACT LOCATIONS OF ALL PAVEMENT MARKINGS SHALL BE AS DIRECTED BY THE ENGINEER.

THE GENERAL CONTRACTOR IS REQUIRED TO HIRE AN ENVIRONMENTAL FIRM WITH AT LEAST (5) DOCUMENTED LEAKING UNDERGROUND STORAGE TANK (LUST) CLEANUPS OR THAT IS PRE-QUALIFIED IN HAZARDOUS WASTE BY THE DEPARTMENT TO REMEDIATE THE SOIL CONTAMINATION AND MONITOR FOR WORKER PROTECTION.

80% FED./20% STATE

SUMMARY OF QUANTITIES			URBAN TOTAL QUANTITIES	CONSTRUCTION TYPE CODE				
							TRAFFIC SIGNALS	
CODE NO	ITEM	UNIT		ROADWAY RE-CONSTRUCTION 0004	RETAINING WALLS 0040	LANDSCAPING ITEMS 0004	95TH ST. @ 104TH AVE./ FLAVIN RD. 0021	100% COST TO NORTH PALOS FIRE PROTECTION DISTRICT 0021
*20100110	TREE REMOVAL (6 TO 15 UNITS DIAMETER)	UNIT	63			63		
*20101000	TEMPORARY FENCE	FOOT	1531			1531		
*20101100	TREE TRUNK PROTECTION	EACH	7			7		
*20101300	TREE PRUNING (1 TO 10 INCH DIAMETER)	EACH	5			5		
*20101350	TREE PRUNING (OVER 10 INCH DIAMETER)	EACH	5			5		
20200100	EARTH EXCAVATION	CU YD	10644	10644				
20201200	REMOVAL AND DISPOSAL OF UNSUITABLE MATERIAL	CU YD	501	501				
20700220	POROUS GRANULAR EMBANKMENT	CU YD	61	61				
*20800150	TRENCH BACKFILL	CU YD	259	259				
21001000	GEOTECHNICAL FABRIC FOR GROUND STABILIZATION	SQ YD	161	161				
*21101615	TOPSOIL FURNISH AND PLACE, 4"	SQ YD	6912			6912		
*21101815	COMPOST FURNISH AND PLACE, 4"	SQ YD	7069			7069		
21400100	GRADING AND SHAPING DITCHES	FOOT	2600	2600				
*25000210	SEEDING, CLASS 2A	ACRE	2			2		
*25000310	SEEDING, CLASS 4	ACRE	1			1		
*25000400	NITROGEN FERTILIZER NUTRIENT	POUND	180	180				
*25000500	PHOSPHORUS FERTILIZER NUTRIENT	POUND	180	180				
*25000600	POTASSIUM FERTILIZER NUTRIENT	POUND	180	180				
25100630	EROSION CONTROL BLANKET	SQ YD	12985	12985				
28000305	TEMPORARY DITCH CHECKS	FOOT	243	243				
28000400	PERIMETER EROSION BARRIER	FOOT	4944	4944				
28000500	INLET AND PIPE PROTECTION	EACH	6	6				
35501316	HOT-MIX ASPHALT BASE COURSE, 8"	SQ YD	360	360				
40603335	HOT-MIX ASPHALT SURFACE COURSE, MIX "D", N50	TON	41	41				
40701866	HOT-MIX ASPHALT PAVEMENT (FULL-DEPTH), 9 1/4"	SQ YD	14000	14000				
44000100	PAVEMENT REMOVAL	SQ YD	27,629	27,629				
44000200	DRIVEWAY PAVEMENT REMOVAL	SQ YD	427	427				
48101200	AGGREGATE SHOULDERS, TYPE B	TON	246	246				
48203034	HOT-MIX ASPHALT SHOULDERS, 9 1/4"	SQ YD	3941	3941				
50300225	CONCRETE STRUCTURES	CU YD	68.7	27.9	40.8			
50500505	STUD SHEAR CONNECTORS	EACH	118		118			
50800105	REINFORCEMENT BARS	POUND	2810	2810				
50800205	REINFORCEMENT BARS, EPOXY COATED	POUND	3900	300	3600			
54213669	PRECAST REINFORCED CONCRETE FLARED END SECTIONS, 24"	EACH	2	2				

80% FED./20% STATE

SUMMARY OF QUANTITIES			URBAN TOTAL QUANTITIES	CONSTRUCTION TYPE CODE				
							TRAFFIC SIGNALS	
CODE NO	ITEM	UNIT		ROADWAY RE-CONSTRUCTION 0004	RETAINING WALLS 0040	LANDSCAPING ITEMS 0004	95TH ST. @ 104TH AVE./ FLAVIN RD. 0021	100% COST TO NORTH PALOS FIRE PROTECTION DISTRICT 0021
54214527	PRECAST REINFORCED CONCRETE FLARED END SECTIONS, EQUIVALENT ROUND-SIZE 42"	EACH	1	1				
54247130	GRATING FOR CONCRETE FLARED END SECTIONS, 24"	EACH	2	2				
54248170	GRATING FOR CONCRETE FLARED END SECTION EQUIVALENT ROUND-SIZE 42"	EACH	1	1				
542A1069	PIPE CULVERTS, CLASS A, TYPE 2 24"	FOOT	120	120				
542A5497	PIPE CULVERTS, CLASS A, TYPE 1 EQUIVALENT ROUND-SIZE 42"	FOOT	165	165				
55101200	STORM SEWER REMOVAL 24"	FOOT	244	244				
59300100	CONTROLLED LOW-STRENGTH MATERIAL	CU YD	53	53				
60100060	CONCRETE HEADWALLS FOR PIPE DRAINS	EACH	10	10				
60100080	FRENCH DRAINS	CU YD	6	6				
60107600	PIPE UNDERDRAINS 4"	FOOT	678	678				
*63000001	STEEL PLATE BEAM GUARDRAIL, TYPE A, 6 FOOT POSTS	FOOT	1182	1182				
*63100167	TRAFFIC BARRIER TERMINAL, TYPE 1 (SPECIAL) TANGENT	EACH	3	3				
63200310	GUARDRAIL REMOVAL	FOOT	255	255				
*66900200	NON-SPECIAL WASTE DISPOSAL	CU YD	188	188				
*66900450	SPECIAL WASTE PLANS AND REPORTS	L SUM	1	1				
*66900530	SOIL DISPOSAL ANALYSIS	EACH	1	1				
67000400	ENGINEER'S FIELD OFFICE, TYPE A	CAL MO	6	6				
67100100	MOBILIZATION	L SUM	1	1				
70106800	CHANGEABLE MESSAGE SIGN	CAL MO	4	4				
70300220	TEMPORARY PAVEMENT MARKING - LINE 4"	FOOT	17,652	17,652				
70300280	TEMPORARY PAVEMENT MARKING - LINE 24"	FOOT	100	100				
70301000	WORK ZONE PAVEMENT MARKING REMOVAL	SQ FT	6,084	6,084				
70400100	TEMPORARY CONCRETE BARRIER	FOOT	1679	1679				
70400200	RELOCATE TEMPORARY CONCRETE BARRIER	FOOT	1700	1700				
*72000100	SIGN PANEL - TYPE 1	SQ FT	39				39	
~~*72000200~~	~~SIGN PANEL - TYPE 2~~	~~SQ FT~~	~~27.5~~				~~27.5~~	
*78000100	THERMOPLASTIC PAVEMENT MARKING - LETTERS AND SYMBOLS	SQ FT	365	365				
*78000200	THERMOPLASTIC PAVEMENT MARKING - LINE 4"	FOOT	12806	12806				
*78000400	THERMOPLASTIC PAVEMENT MARKING - LINE 6"	FOOT	1094	1094				
*78000600	THERMOPLASTIC PAVEMENT MARKING - LINE 12"	FOOT	831	831				

Rev.

* SPECIALTY ITEMS

☐ NON-PARTICIPATING ITEMS

FILE NAME = c:\pw_work\pwidot\sfeedpo\d0259915\PI44499-Design.dgn	USER NAME = sfeedpo	DESIGNED -	REVISED -	STATE OF ILLINOIS DEPARTMENT OF TRANSPORTATION	SUMMARY OF QUANTITIES 95th STREET @ 104th AVENUE/ FLAVIN ROAD	F.A.U. RTE. 1566	SECTION 29R-N-1	COUNTY COOK	TOTAL SHEETS 120	SHEET NO. 4
		DRAWN -	REVISED -					CONTRACT NO. 62377		
	PLOT SCALE = 50.0000 ' / in.	CHECKED -	REVISED -		SCALE: SHEET NO. OF SHEETS STA. TO STA.	FED. ROAD DIST. NO. 1	ILLINOIS	FED. AID PROJECT		
	PLOT DATE = 12/15/2011	DATE -	REVISED -							

SUMMARY OF QUANTITIES

CODE NO	ITEM	UNIT	TOTAL QUANTITIES	CONSTRUCTION TYPE CODE: ROADWAY RE-CONSTRUCTION 0004	RETAINING WALLS 0040	LANDSCAPING ITEMS 0004 ~~0031~~	TRAFFIC SIGNALS: 95TH ST. @ 104TH AVE./ FLAVIN RD. 0021	TRAFFIC SIGNALS: 100% COST TO NORTH PALOS FIRE PROTECTION DISTRICT 0021
*78000650	THERMOPLASTIC PAVEMENT MARKING - LINE 24"	FOOT	149	149				
*78100100	RAISED REFLECTIVE PAVEMENT MARKER	EACH	198	198				
*78200410	GUARDRAIL MARKERS, TYPE A	EACH	15	15				
*78201000	TERMINAL MARKER - DIRECT APPLIED	EACH	3	3				
78300100	PAVEMENT MARKING REMOVAL	SQ FT	3143	3143				
*80500010	SERVICE INSTALLATION - GROUND MOUNTED	EACH	1				1	
~~*81018500~~	~~CONDUIT PUSHED, 2" DIA., GALVANIZED STEEL~~	~~FOOT~~	~~52~~				~~52~~	
~~*81018900~~	~~CONDUIT PUSHED, 4" DIA., GALVANIZED STEEL~~	~~FOOT~~	~~317~~				~~317~~	
*81028200	UNDERGROUND CONDUIT, GALVANIZED STEEL, 2" DIA.	FOOT	815				815	
*81028210	UNDERGROUND CONDUIT, GALVANIZED STEEL, 2 1/2" DIA.	FOOT	40				40	
*81028240	UNDERGROUND CONDUIT, GALVANIZED STEEL, 4" DIA.	FOOT	363				363	
*81400100	HANDHOLE	EACH	2				2	
*81400200	HEAVY-DUTY HANDHOLE	EACH	7				7	
*81400300	DOUBLE HANDHOLE	EACH	1				1	
~~*81900200~~	~~TRENCH AND BACKFILL FOR ELECTRICAL WORK~~	~~FOOT~~	~~590~~				~~590~~	
*85700200	FULL-ACTUATED CONTROLLER AND TYPE IV CABINET	EACH	1				1	
*87301225	ELECTRIC CABLE IN CONDUIT, SIGNAL NO. 14 3C	FOOT	340					340
*87301245	ELECTRIC CABLE IN CONDUIT, SIGNAL NO. 14 5C	FOOT	668				668	
*87301255	ELECTRIC CABLE IN CONDUIT, SIGNAL NO. 14 7C	FOOT	1913				1913	
*87301305	ELECTRIC CABLE IN CONDUIT, LEAD-IN, NO. 14 1 PAIR	FOOT	1707				1707	
*87301805	ELECTRIC CABLE IN CONDUIT, SERVICE, NO. 6 2 C	FOOT	54				54	
*87301900	ELECTRICAL CABLE IN CONDUIT, EQUIPMENT GROUNDING CONDUCTOR, NO. 6 1C	FOOT	722				722	
~~*87700250~~	~~STEEL MAST ARM ASSEMBLY AND POLE, 42 FT.~~	~~EACH~~	~~1~~				~~1~~	
~~*87700280~~	~~STEEL MAST ARM ASSEMBLY AND POLE, 48 FT.~~	~~EACH~~	~~1~~				~~1~~	
~~*87700300~~	~~STEEL MAST ARM ASSEMBLY AND POLE, 52 FT.~~	~~EACH~~	~~1~~				~~1~~	
*87700310	STEEL MAST ARM ASSEMBLY AND POLE, 54 FT.	EACH	1				1	
*87800100	CONCRETE FOUNDATION, TYPE A	FOOT	12				12	
~~*87800200~~	~~CONCRETE FOUNDATION, TYPE B~~	~~FOOT~~	~~4~~				~~4~~	

SUMMARY OF QUANTITIES

CODE NO	ITEM	UNIT	TOTAL QUANTITIES	CONSTRUCTION TYPE CODE: ROADWAY RE-CONSTRUCTION 0004	RETAINING WALLS 0040	LANDSCAPING ITEMS 0004 ~~0031~~	TRAFFIC SIGNALS: 95TH ST. @ 104TH AVE./ FLAVIN RD. 0021	TRAFFIC SIGNALS: 100% COST TO NORTH PALOS FIRE PROTECTION DISTRICT 0021
*87800415	CONCRETE FOUNDATION, TYPE E 36-INCH DIAMETER	FOOT	56				56	
*88030020	SIGNAL HEAD, LED, 1-FACE, 3-SECTION, MAST-ARM MOUNTED	EACH	3				3	
*88030100	SIGNAL HEAD, LED, 1-FACE, 5-SECTION, BRACKET MOUNTED	EACH	3				3	
*88030110	SIGNAL HEAD, LED, 1-FACE, 5-SECTION, MAST-ARM MOUNTED	EACH	5				5	
*88200210	TRAFFIC SIGNAL BACKPLATE, LOUVERED, ALUMINUM	EACH	8				8	
*88500100	INDUCTIVE LOOP DETECTOR	EACH	8				8	
*88600100	DETECTOR LOOP, TYPE I	FOOT	1083				1083	
*88700200	LIGHT DETECTOR	EACH	2					2
*88700300	LIGHT DETECTOR AMPLIFIER	EACH	1					1
*A2006716	TREE, QUERCUS MACROCARPA (BUR OAK), 2" CALIPER, BALLED AND BURLAPPED	EACH	4			4		
*C2C01120	SHRUB, CEPHALANTHUS OCCIDENTALIS (BUTTON BUSH), 2' HEIGHT, CONTAINER	EACH	160			160		
*K0013030	PERENNIAL PLANTS, WETLAND TYPE, 2" DIAMETER BY 4" DEEP PLUG	UNIT	6.08			6.08		
*K0026850	PERENNIAL PLANT CARE	SQ YD	264			264		
*K0029626	WEED CONTROL, TEASEL	POUND	0.25			0.25		
*K0029634	WEED CONTROL, PRE-EMERGENT GRANULAR HERBICIDE	POUND	400			400		
K1005418	TEMPORARY SEEDING	ACRE	3			3		
*XK029632	WEED CONTROL, NON-SELECTIVE AND NON-RESIDUAL (WETLAND)	GALLON	4			4		
~~XX008455~~	~~INLET BOX, SPECIAL~~	~~EACH~~	~~1~~	~~1~~				
~~*XX006716~~	~~RUSTIFICATION FINISH, TYPE 1~~	~~SQ FT~~	~~7140~~		~~7140~~			
X0322992	COARSE SAND PLACEMENT, 4"	SQ YD	70			70		
X2020110	GRADING AND SHAPING SHOULDERS	UNIT	62	62				
*X2501800	SEEDING, CLASS 4 (MODIFIED)	ACRE	0.3			0.3		
*X2502024	SEEDING, CLASS 4B (MODIFIED)	ACRE	0.4			0.4		
X4022000	TEMPORARY ACCESS (COMMERCIAL ENTRANCE)	EACH	2	2				
~~*X4400110~~	~~TEMPORARY PAVEMENT REMOVAL~~	~~SQ YD~~	~~17625~~	~~17625~~				
X4810200	AGGREGATE SHOULDER REMOVAL	CU YD	1901	1901				
X5121800	PERMANENT STEEL SHEET PILING	SQ FT	7460		7460			
X6310176	TRAFFIC BARRIER TERMINAL, TYPE 2 (SPECIAL)	EACH	3	3				
X6640300	CHAIN LINK FENCE REMOVAL	FOOT	535	535				
X6640560	CHAIN LINK FENCE, 6' (SPECIAL)	FOOT	535	535				

* SPECIALTY ITEMS

☐ NON-PARTICIPATING ITEMS

FILE NAME = c:\pw_work\pwidot\steedpa\d0159ISV\H44499-Design.dgn	USER NAME = steedpa	DESIGNED	REVISED -
		DRAWN -	REVISED -
	PLOT SCALE = 50.0000 ' / In.	CHECKED -	REVISED -
	PLOT DATE = 12/15/2011	DATE -	REVISED -

STATE OF ILLINOIS
DEPARTMENT OF TRANSPORTATION

SUMMARY OF QUANTITIES
95th STREET @ 104th AVENUE/ FLAVIN ROAD

SCALE: | SHEET NO. OF SHEETS | STA. TO STA.

F.A.U. RTE.	SECTION	COUNTY	TOTAL SHEETS	SHEET NO.
1566	29R-N-1	COOK	120	5
		CONTRACT NO. 62377		

FED. ROAD DIST. NO. 1 | ILLINOIS | FED. AID PROJECT

SUMMARY OF QUANTITIES

CODE NO	ITEM	UNIT	TOTAL QUANTITIES	CONSTRUCTION TYPE CODE: ROADWAY RE-CONSTRUCTION 0004	RETAINING WALLS 0040	LANDSCAPING ITEMS 0004	TRAFFIC SIGNALS: 95TH ST. @ 104TH AVE./ FLAVIN RD. 0021	TRAFFIC SIGNALS: 100% COST TO NORTH PALOS FIRE PROTECTION DISTRICT 0021
X7010216	TRAFFIC CONTROL AND PROTECTION, (SPECIAL)	L SUM	1	1				
*X8620200	UNINTERRUPTIBLE POWER SUPPLY, SPECIAL	EACH	1				1	
*X8730250	ELECTRIC CABLE IN CONDUIT NO. 20 3/C, TWISTED, SHIELDED	FOOT	340					340
Z0001050	AGGREGATE SUBGRADE 12"	SQ YD	17937	17937				
Z0013798	CONSTRUCTION LAYOUT	L SUM	1	1				
~~Z0029604~~	~~HEADWALL REMOVAL~~	~~EACH~~	~~4~~	~~4~~				
Z0030240	IMPACT ATTENUATORS, TEMPORARY (NON-REDIRECTIVE), TEST LEVEL 2	EACH	6	6				
Z0030340	IMPACT ATTENUATORS, RELOCATE (NON-REDIRECTIVE), TEST LEVEL 2	EACH	6	6				
Z0030850	TEMPORARY INFORMATION SIGNING	SQ FT	102.8	102.8				
Z0042002	POROUS GRANULAR EMBANKMENT, SUBGRADE	CU YD	781	781				
Z0062456	TEMPORARY PAVEMENT	SQ YD	17625	17625				
*Z0064800	SELECTIVE CLEARING	UNIT	14			14		
* 81028220	UNDERGROUND CONDUIT, GALVANIZED STEEL, 3" DIA.	FOOT	106				106	
* 87502500	TRAFFIC SIGNAL POST, GALVANIZED STEEL, 16 FT.	EACH	3				3	
* 87700240	STEEL MAST ARM ASSEMBLY AND POLE, 40 FT.	EACH	2				2	
* 87700290	STEEL MAST ARM ASSEMBLY AND POLE, 50 FT.	EACH	1				1	
* 87800150	CONCRETE FOUNDATION, TYPE C	FOOT	4				4	
* 88030220	SIGNAL HEAD, LED, 2-FACE, 5-SECTION BRACKET MOUNTED	EACH	1				1	
50100100	REMOVAL OF EXISTING STRUCTURES	EACH	2	2				
50104400	CONCRETE HEADWALL REMOVAL	EACH	4	4				
50300285	FORM LINER TEXTURED SURFACE	SQ FT	735		735			

SUMMARY OF QUANTITIES

CODE NO	ITEM	UNIT	TOTAL QUANTITIES	CONSTRUCTION TYPE CODE

* SPECIALTY ITEMS

☐ NON-PARTICIPATING ITEMS

FILE NAME = c:\pw_work\pw1dot\steedpo\d0159915\P144499-Design.dgn	USER NAME = steedpo	DESIGNED -	REVISED -
		DRAWN -	REVISED -
	PLOT SCALE = 50.0000 ' / in.	CHECKED -	REVISED -
	PLOT DATE = 12/15/2011	DATE -	REVISED -

STATE OF ILLINOIS
DEPARTMENT OF TRANSPORTATION

SUMMARY OF QUANTITIES
95th STREET @ 104th AVENUE/ FLAVIN ROAD

SCALE: | SHEET NO. OF SHEETS | STA. TO STA.

F.A.U. RTE.	SECTION	COUNTY	TOTAL SHEETS	SHEET NO.
1566	29R-N-1	COOK	120	6
		CONTRACT NO. 62377		
FED. ROAD DIST. NO. 1	ILLINOIS	FED. AID PROJECT		

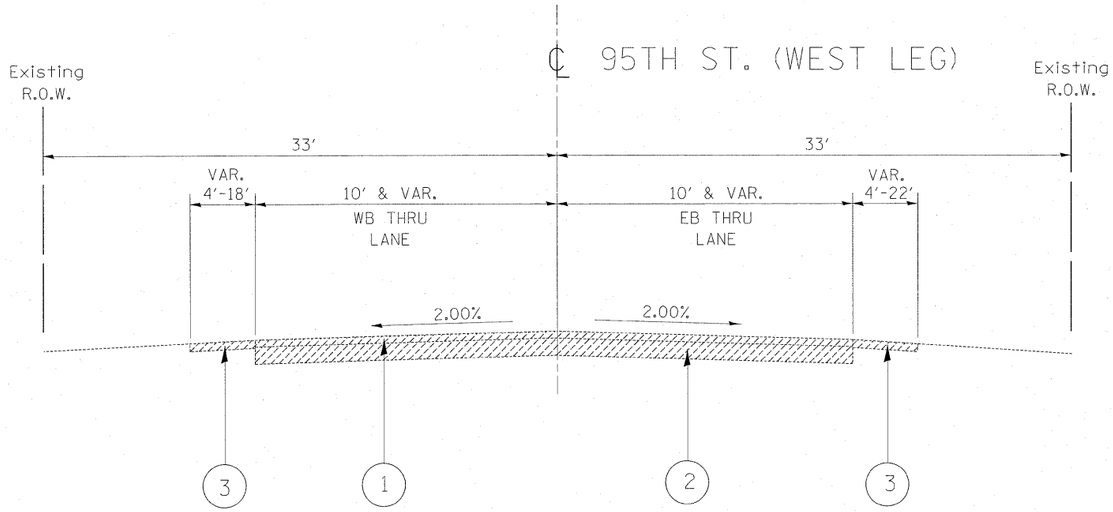

EXISTING TYPICAL SECTION
STA. 17+39 TO 25+22

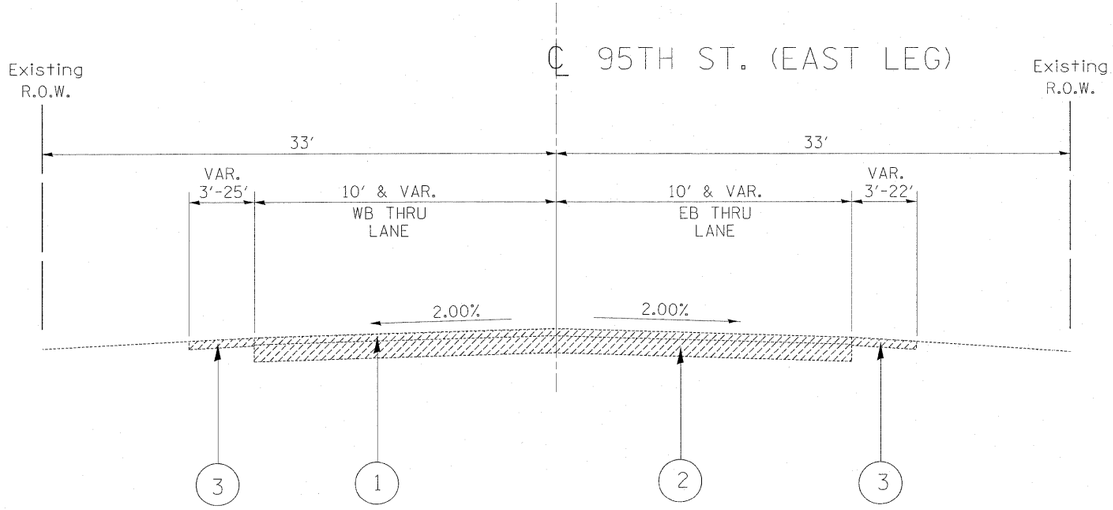

EXISTING TYPICAL SECTION
STA. 25+22 TO 35+00

LEGEND:

1. EXIST. BITUMINOUS SURFACE, ±7"
2. EXIST. P.C.C. PAVEMENT BASE, ±8"
3. EXIST. AGGREGATE SHOULDER
4. EXIST. GUARDRAIL
5. PROP. AGGREGATE SUBGRADE, 12"
6. PROP. HOT-MIX ASPHALT PAVEMENT (FULL DEPTH), 9¼"
7. PROP. HOT-MIX ASPHALT SHOULDER, 9¼"
8. PROP. STEEL PLATE BEAM GUARDRAIL
9. PROP. RETAINING WALL
10. PROP. GRADING AND SHAPING DITCHES
11. PROP. GRADING AND SHAPING SHOULDERS
12. PROP. AGGREGATE SHOULDERS, TYPE B

DENOTES ITEMS TO BE REMOVED

FILE NAME = c:\pw_work\pwidot\steedpa\d0159915\P144499-Design.dgn	USER NAME = steedpa	DESIGNED -	REVISED -	STATE OF ILLINOIS DEPARTMENT OF TRANSPORTATION	EXISTING AND PROPOSED TYPICAL SECTIONS 95th STREET @ 104th AVENUE/ FLAVIN ROAD	F.A.U. RTE.	SECTION	COUNTY	TOTAL SHEETS	SHEET NO.
		DRAWN -	REVISED -			1566	29 R-N-1	COOK	120	7
	PLOT SCALE = 50.1351 ' / in.	CHECKED -	REVISED -					CONTRACT NO. 62377		
	PLOT DATE = 1/19/2012	DATE -	REVISED -		SCALE: SHEET NO. OF SHEETS STA. TO STA.		ILLINOIS	FED. AID PROJECT		

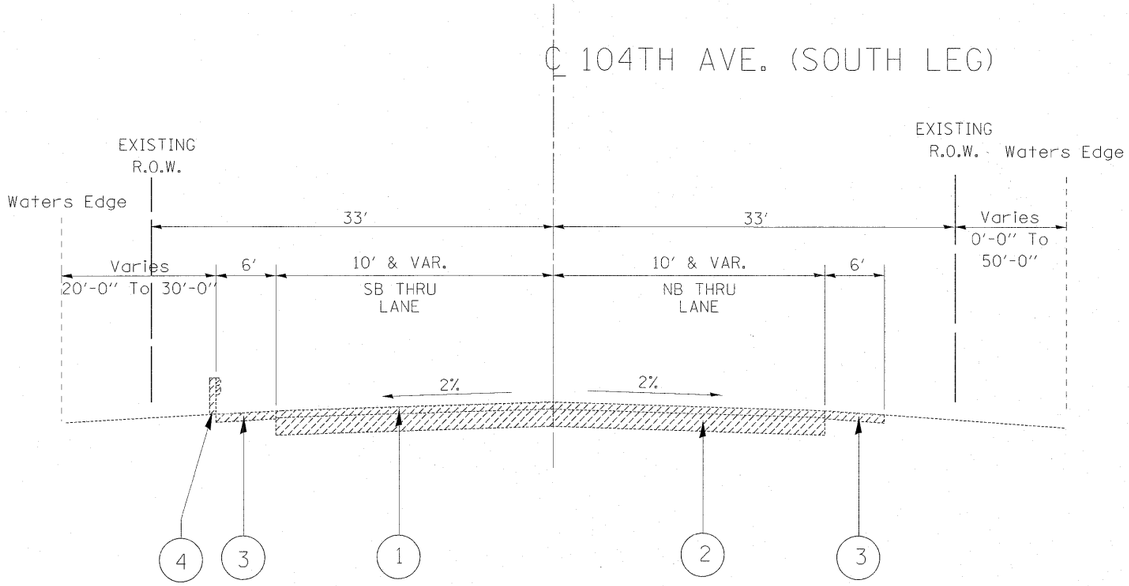

EXISTING TYPICAL SECTION
STA. 206+21 TO 215+64

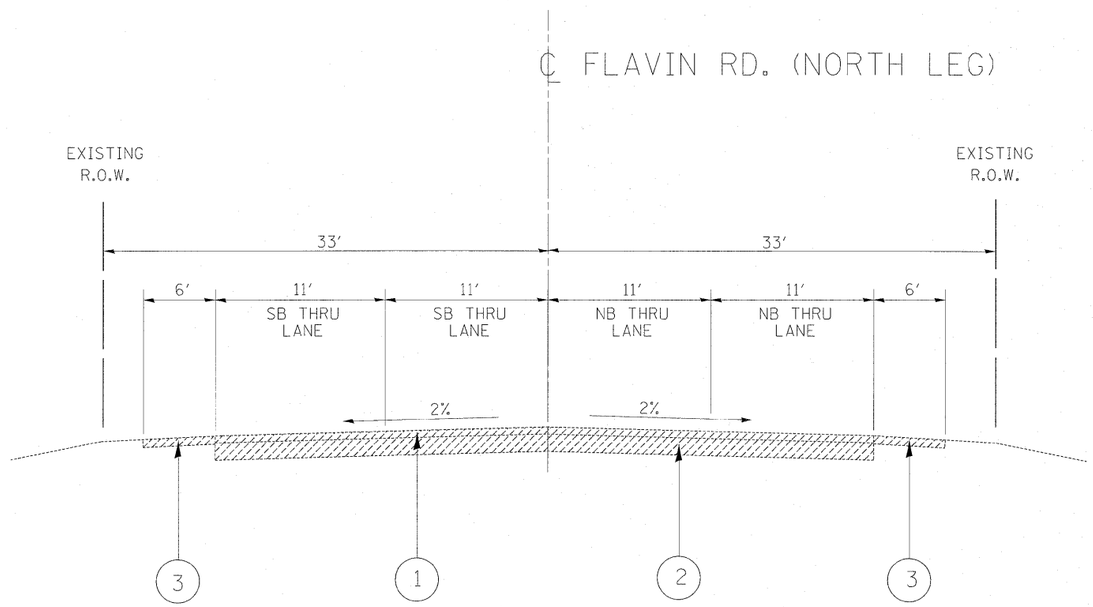

EXISTING TYPICAL SECTION
STA. 215+64 TO 224+00

LEGEND:

1. EXIST. BITUMINOUS SURFACE, ±7"
2. EXIST. P.C.C. PAVEMENT BASE, ±8"
3. EXIST. AGGREGATE SHOULDER
4. EXIST. GUARDRAIL
5. PROP. AGGREGATE SUBGRADE, 12"
6. PROP. HOT-MIX ASPHALT PAVEMENT (FULL DEPTH), 9¼"
7. PROP. HOT-MIX ASPHALT SHOULDER, 9¼"
8. PROP. STEEL PLATE BEAM GUARDRAIL
9. PROP. RETAINING WALL
10. PROP. GRADING AND SHAPING DITCHES
11. PROP. GRADING AND SHAPING SHOULDERS
12. PROP. AGGREGATE SHOULDERS, TYPE B

▨ DENOTES ITEMS TO BE REMOVED

FILE NAME = c:\pw_work\pwidot\steedpe\d0159915\P144499-Design.dgn	USER NAME = steedpe	DESIGNED -	REVISED -	STATE OF ILLINOIS DEPARTMENT OF TRANSPORTATION	EXISTING AND PROPOSED TYPICAL SECTIONS 95th STREET @ 104th AVENUE/ FLAVIN ROAD	F.A.U. RTE.	SECTION	COUNTY	TOTAL SHEETS	SHEET NO.
	PLOT SCALE = 50.0239 ' / in.	DRAWN -	REVISED -			1566	29 R-N-1	COOK	120	8
	PLOT DATE = 1/19/2012	CHECKED -	REVISED -					CONTRACT NO. 62377		
		DATE -	REVISED -		SCALE: SHEET NO. OF SHEETS STA. TO STA.			ILLINOIS FED. AID PROJECT		

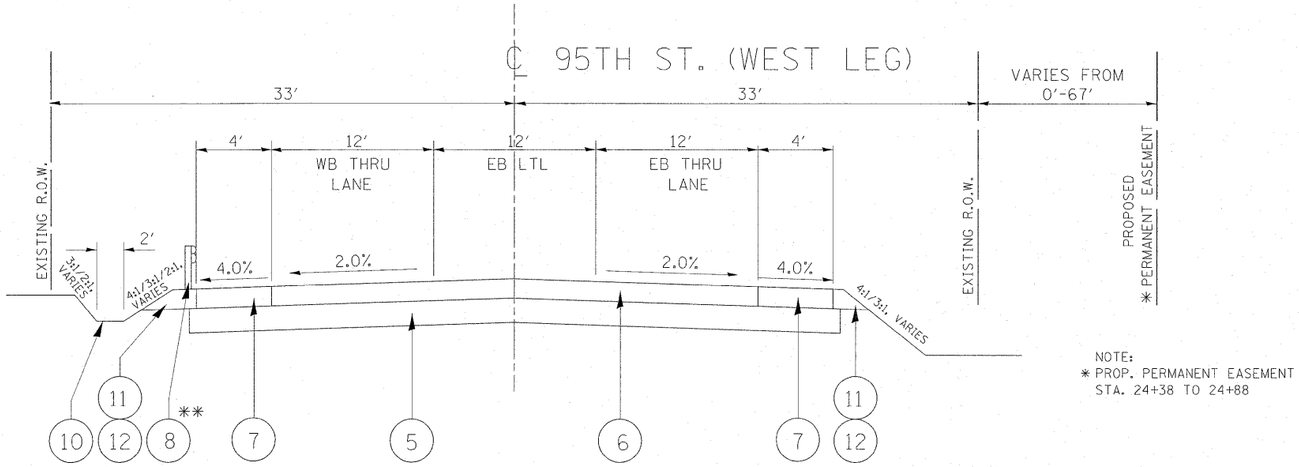

NOTE:
✱ PROP. PERMANENT EASEMENT
STA. 24+38 TO 24+88

NOTE:
** PROP. STEEL PLATE BEAM GUARDRAIL
STA. 19+00 TO 22+20

PROPOSED TYPICAL SECTION
STA. 17+39 TO 25+22

LEGEND:

1. EXIST. BITUMINOUS SURFACE, ±7″
2. EXIST. P.C.C. PAVEMENT BASE, ±8″
3. EXIST. AGGREGATE SHOULDER
4. EXIST. GUARDRAIL
5. PROP. AGGREGATE SUBGRADE, 12″
6. PROP. HOT-MIX ASPHALT PAVEMENT (FULL DEPTH), 9¼″
7. PROP. HOT-MIX ASPHALT SHOULDER, 9¼″
8. PROP. STEEL PLATE BEAM GUARDRAIL
9. PROP. RETAINING WALL
10. PROP. GRADING AND SHAPING DITCHES
11. PROP. GRADING AND SHAPING SHOULDERS
12. PROP. AGGREGATE SHOULDERS, TYPE B

DENOTES ITEMS TO BE REMOVED

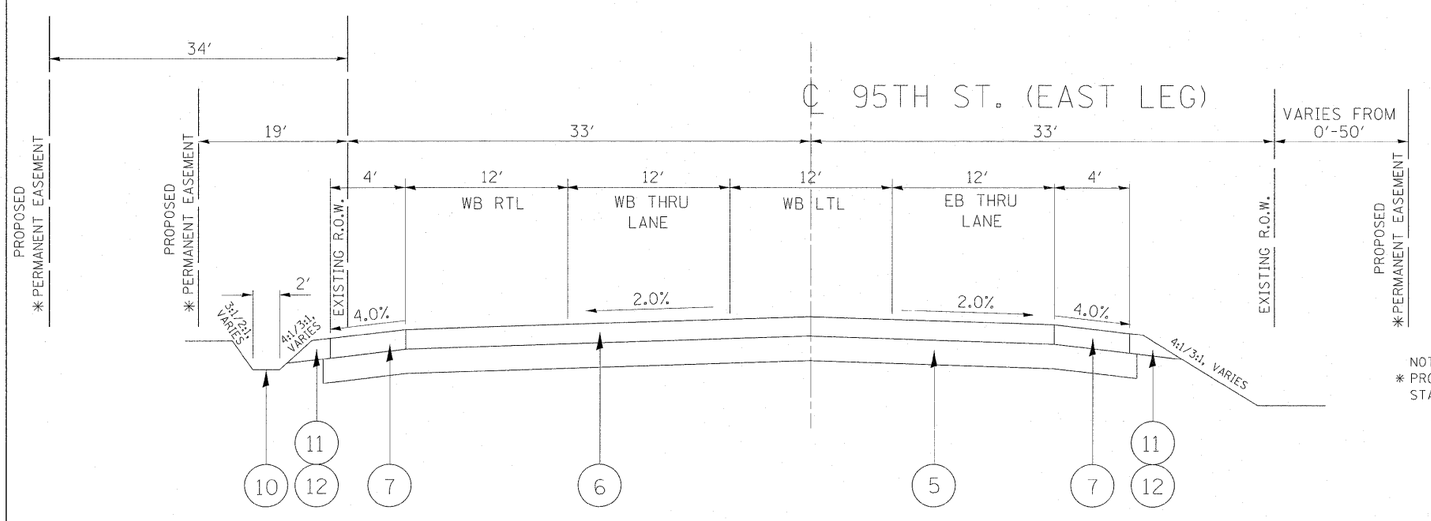

NOTE:
✱ PROP. PERMANENT EASEMENT
STA. 25+54 TO 26+58

NOTE:
✱ PROP. PERMANENT EASEMENT
(34′ FROM EXIST. R.O.W.)
STA. 26+11 TO 28+00

PROP. PERMANENT EASEMENT
(19′ FROM EXIST. R.O.W.)
STA. 28+00 TO 32+00

PROPOSED TYPICAL SECTION
STA. 25+22 TO 35+00

FILE NAME = c:\pw_work\pwidot\steedpa\d0159915\P144099-Design.dgn	USER NAME = steedpa	DESIGNED -	REVISED -	STATE OF ILLINOIS DEPARTMENT OF TRANSPORTATION	EXISTING AND PROPOSED TYPICAL SECTIONS 95th STREET @ 104th AVENUE/ FLAVIN ROAD	F.A.U. RTE.	SECTION	COUNTY	TOTAL SHEETS	SHEET NO.
		DRAWN -	REVISED -			1566	29 R-N-1	COOK	120	9
	PLOT SCALE = 50.0239 ′ / in.	CHECKED -	REVISED -					CONTRACT NO. 62377		
	PLOT DATE = 1/19/2012	DATE -	REVISED -		SCALE: SHEET NO. OF SHEETS STA. TO STA.		ILLINOIS FED. AID PROJECT			

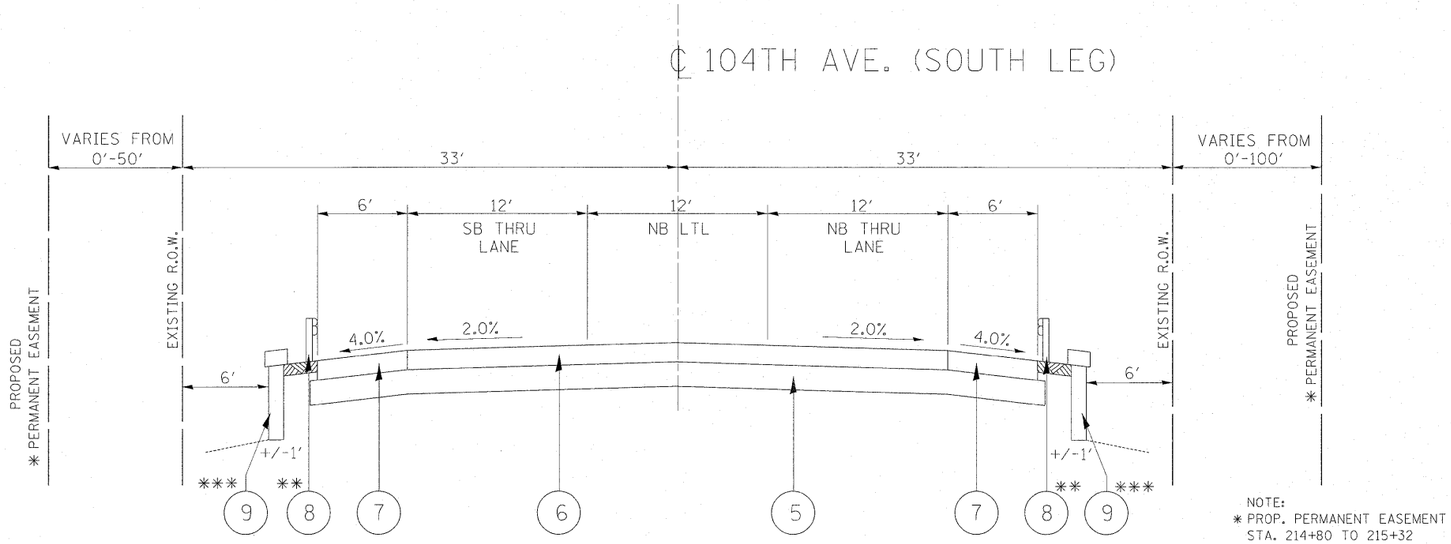

NOTE:
* PROP. PERMANENT EASEMENT
STA. 214+80 TO 215+32

NOTE:
* PROP. PERMANENT EASEMENT
STA. 214+63 TO 215+30

** PROP. STEEL PLATE BEAM GUARDRAIL
STA. 211+00 TO 215+30

*** PROP. RETAINING WALL
STA. 212+00 TO 214+10

PROPOSED TYPICAL SECTION
STA. 206+21 TO 215+64

LEGEND:

1. EXIST. BITUMINOUS SURFACE, ±7"
2. EXIST. P.C.C. PAVEMENT BASE, ±8"
3. EXIST. AGGREGATE SHOULDER
4. EXIST. GUARDRAIL
5. PROP. AGGREGATE SUBGRADE, 12"
6. PROP. HOT-MIX ASPHALT PAVEMENT (FULL DEPTH), 9 1/4"
7. PROP. HOT-MIX ASPHALT SHOULDER, 9 1/4"
8. PROP. STEEL PLATE BEAM GUARDRAIL
9. PROP. RETAINING WALL
10. PROP. GRADING AND SHAPING DITCHES
11. PROP. GRADING AND SHAPING SHOULDERS
12. PROP. AGGREGATE SHOULDERS, TYPE B

DENOTES ITEMS TO BE REMOVED

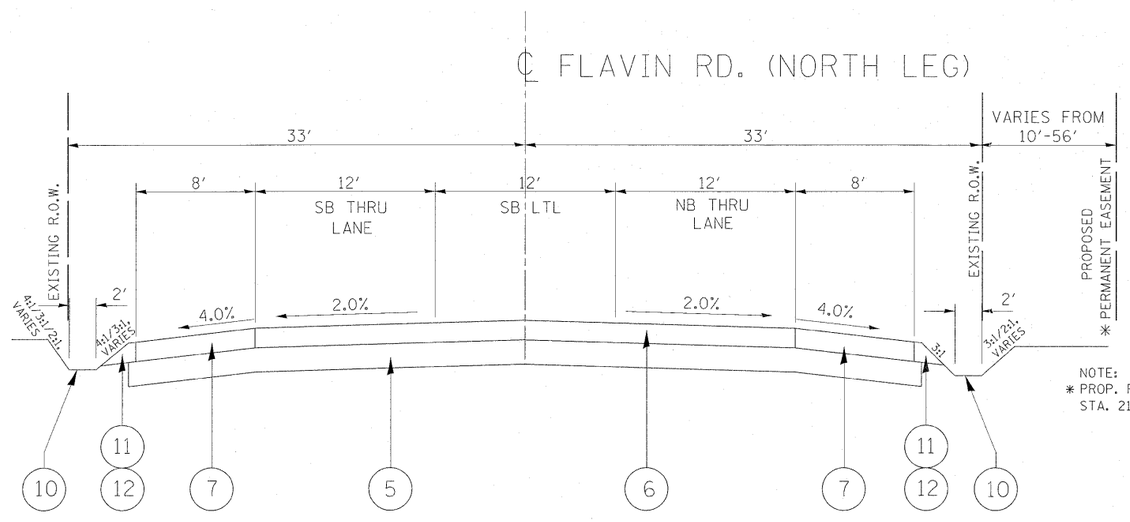

NOTE:
* PROP. PERMANENT EASEMENT
STA. 216+26 TO 224+00

PROPOSED TYPICAL SECTION
STA. 215+64 TO 224+00

FILE NAME = c:\pw_work\pwidot\steedpa\d0159915\P144499-Design.dgn	USER NAME = steedpa	DESIGNED -	REVISED -	STATE OF ILLINOIS DEPARTMENT OF TRANSPORTATION	EXIOSTING AND PROPOSED TYPICAL SECTIONS 95th STREET @ 104th AVENUE/ FLAVIN ROAD	F.A.U. RTE. 1566	SECTION 29 R-N-1	COUNTY COOK	TOTAL SHEETS 120	SHEET NO. 10
	PLOT SCALE = 50.0712 ' / in.	DRAWN -	REVISED -					CONTRACT NO. 62377		
	PLOT DATE = 1/19/2012	CHECKED -	REVISED -							
		DATE -	REVISED -		SCALE: SHEET NO. OF SHEETS STA. TO STA.	ILLINOIS FED. AID PROJECT				

EARTHWORK SCHEDULE FOR 95TH ST.

LOCATION	EARTH EXCAVATION	EARTH EXCAVATION ADJUSTED FOR SHRINKAGE (SHRINKAGE FACTOR 15%)	EMBANKMENT	EMBANKMENT BALANCE WASTE (+) OR SHORTAGE (-)
	CUBIC YARDS	CUBIC YARDS	CUBIC YARDS	CUBIC YARDS
STA. 18+00 TO 19+00	127.52	108.39	6.74	+101.65
STA. 19+00 TO 19+50	71.69	60.94	14.52	+46.42
STA. 19+50 TO 19+66	99.27	84.38	10.26	+74.12
STA. 19+66 TO 20+00	217.86	185.18	6.56	+178.62
STA. 20+00 TO 21+00	189.56	161.13	13.89	+147.24
STA. 21+00 TO 22+00	181.63	154.39	5.81	+148.58
STA. 22+00 TO 23+00	148.52	126.24	1.96	+124.28
STA. 23+00 TO 24+00	124.15	105.53	0.48	+105.05
STA. 24+00 TO 25+00	551.81	469.04	0.15	+468.89
STA. 25+00 TO 26+00	782.63	665.24	0.19	+665.05
STA. 26+00 TO 27+00	478.26	406.52	0.19	+406.33
STA. 27+00 TO 28+00	329.59	280.15	0.07	+280.08
STA. 28+00 TO 29+00	236.96	201.42	4.48	+196.94
STA. 29+00 TO 29+83	547.69	465.54	22.54	+443.00
STA. 29+83 TO 30+00	103.00	87.55	10.55	+77.00
STA. 30+00 TO 31+00	56.11	47.69	60.74	-13.05
STA. 31+00 TO 32+00	36.26	30.82	64.41	-33.59
STA. 32+00 TO 33+00	30.30	25.75	53.22	-27.47
STA. 33+00 TO 34+00	95.33	81.03	10.89	+70.14
STA. 34+00 TO 35+00	156.48	133.01	3.63	+129.38
TOTAL	4564.62	3879.94	291.28	+3588.66

EARTHWORK SCHEDULE FOR 104TH AVE./ FLAVIN RD.

LOCATION	EARTH EXCAVATION	EARTH EXCAVATION ADJUSTED FOR SHRINKAGE (SHRINKAGE FACTOR 15%)	EMBANKMENT	EMBANKMENT BALANCE WASTE (+) OR SHORTAGE (-)
	CUBIC YARDS	CUBIC YARDS	CUBIC YARDS	CUBIC YARDS
STA. 207+00 TO 208+00	221.59	188.35	0.56	+187.79
STA. 208+00 TO 209+00	265.81	225.94	9.30	+216.64
STA. 209+00 TO 210+00	355.85	302.47	12.15	+290.32
STA. 210+00 TO 211+00	465.15	395.38	5.56	+389.82
STA. 211+00 TO 212+00	406.00	345.10	7.44	+337.66
STA. 212+00 TO 212+25	82.42	69.79	2.96	+66.83
STA. 212+25 TO 212+50	78.91	67.07	3.60	+63.47
STA. 212+50 TO 212+75	77.08	65.52	4.18	+61.34
STA. 212+75 TO 213+00	75.70	64.34	4.66	+59.68
STA. 213+00 TO 213+25	76.81	65.29	4.79	+60.50
STA. 213+25 TO 213+50	79.81	67.84	4.69	+63.15
STA. 213+50 TO 213+75	83.41	70.90	4.36	+66.54
STA. 213+75 TO 214+00	88.89	75.56	3.57	+71.99
STA. 214+00 TO 214+04	15.81	13.44	0.52	+12.92
STA. 214+04 TO 214+10	21.39	18.18	0.71	+17.47
STA. 214+10 TO 215+00	334.97	284.72	9.10	+275.62
STA. 215+00 TO 216+00	548.63	466.34	3.78	+462.56
STA. 216+00 TO 217+00	417.19	354.61	0.19	+354.42
STA. 217+00 TO 218+00	236.33	200.88	1.93	+198.95
STA. 218+00 TO 219+00	312.04	265.23	1.81	+263.42
STA. 219+00 TO 220+00	367.85	312.67	0.07	+312.60
STA. 220+00 TO 221+00	363.30	308.80	0	+308.80
STA. 221+00 TO 222+00	377.78	321.11	0.04	+321.07
STA. 222+00 TO 223+00	401.44	341.22	0.04	+341.18
STA. 223+00 TO 224+00	324.74	276.03	2.07	+273.96
TOTAL	6078.90	5166.78	88.08	+5078.70

HOT-MIX ASPHALT MIXTURE REQUIREMENTS

MIXTURE USE	DESIGN AIR VOIDS
ROADWAY RECONSTRUCTION	
HOT-MIX ASPHALT BINDER COURSE, IL-19, N90, 5 1/4"	4% @ 90
POLYMERIZED HOT-MIX ASPHALT BINDER COURSE, STONE MATRIX ASPHALT, N80, 2"	3.5% @ 80
POLYMERIZED HOT-MIX ASPHALT SURFACE COURSE, STONE MATRIX ASPHALT, N80, 2"	3.5% @ 80
SHOULDER RECONSTRUCTION	
HOT-MIX ASPHALT SHOULDER, 9 1/4" (HMA BINDER IL-19MM)	2% @ 30
DRIVEWAYS (COMMERCIAL ENTRANCE)	
HOT-MIX ASPHALT BASE COURSE, 8" (HMA BINDER IL-19MM)	4% @ 50
HOT-MIX ASPHALT SURFACE COURSE, MIX "D", N50, 2" (IL-9.5MM)	4% @ 50
TEMPORARY PAVEMENT	
TEMPORARY PAVEMENT, 2 1/4" (HMA BINDER IL-19MM)	4% @ 50
HOT-MIX ASPHALT SURFACE COURSE, MIX "D", N50, 1 1/2" (IL-9.5MM)	4% @ 50

NOTE:

THE UNIT WEIGHT USED TO CALCULATE ALL HOT-MIX ASPHALT QUANTITIES IS 112 LBS./SQ. YD./ IN.

THE "AC TYPE" FOR POLYMERIZED HMA MIXES SHALL BE "SBS/SBR PG 70 -22" AND FOR NON-POLYMERIZED HMA THE "AC TYPE" SHALL BE "PG 64 -22" UNLESS MODIFIED BY DISTRICT ONE SPECIAL PROVISIONS. FOR "PERCENT OF RAP" SEE DISTRICT ONE SPECIAL PROVISIONS.

FOR "PERCENT OF RAP" SEE DISTRICT ONE SPECIAL PROVISIONS.

HOT-MIX ASPHALT BINDER COURSE, IL-19, N90, 5 1/4", POLYMERIZED HOT-MIX ASPHALT BINDER COURSE, STONE MATRIX ASPHALT, N80, 2" AND POLYMERIZED HOT-MIX ASPHALT SURFACE COURSE, STONE MATRIX ASPHALT, N80, 2" ARE COMPONENTS OF HOT-MIX ASPHALT PAVEMENT (FULL DEPTH), 9 1/4"

THE 5 1/4" HOT-MIX ASPHALT BINDER COURSE, IL-19, N90 LAYER SHOULD BE PLACED IN 2 LIFTS.

CONTRACT NO. 62377

F.A.U. RTE.	SECTION	COUNTY	TOTAL SHEETS	SHEET NO.
1566	29R-N-1	COOK	120	12
STA.		TO STA.		
FED. ROAD DIST. NO.	ILLINOIS	FED. AID PROJECT		

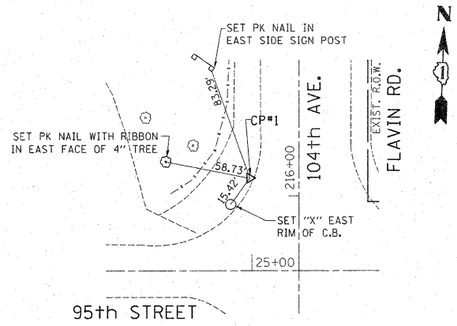

CP#1

5/8" IRON ROD WITH AMERICAN SURVEYING CONSULTANTS (ASC) CAP

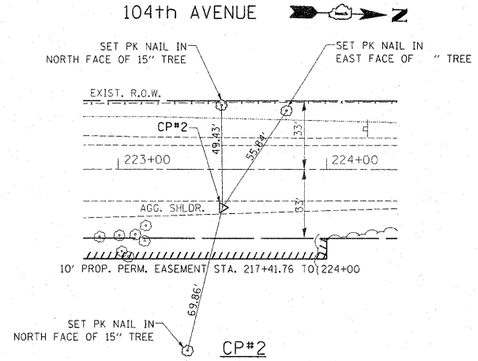

CP#2

5/8" IRON ROD WITH AMERICAN SURVEYING CONSULTANTS (ASC) CAP

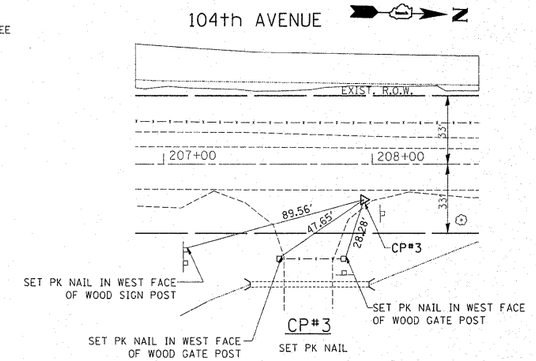

CP#3

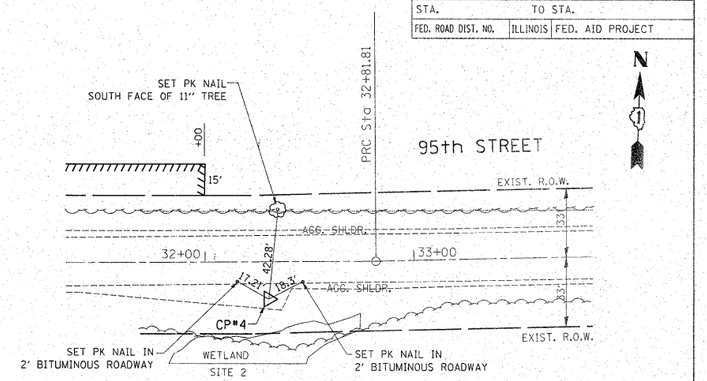

CP#4

5/8" IRON ROD WITH AMERICAN SURVEYING CONSULTANTS (ASC) CAP

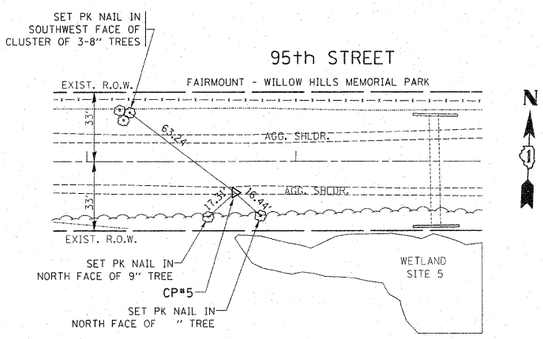

CP#5

5/8" IRON ROD WITH AMERICAN SURVEYING CONSULTANTS (ASC) CAP

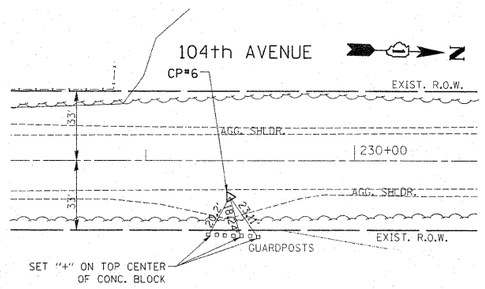

CP#6

5/8" IRON ROD WITH AMERICAN SURVEYING CONSULTANTS (ASC) CAP

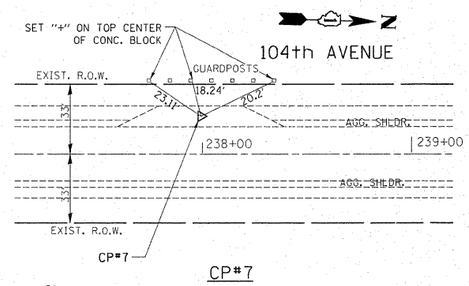

CP#7

5/8" IRON ROD WITH AMERICAN SURVEYING CONSULTANTS (ASC) CAP

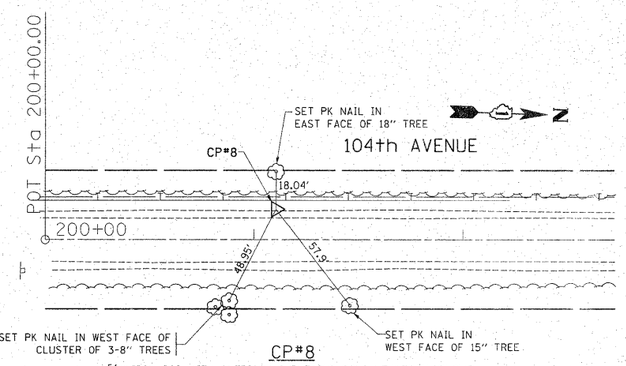

CP#8

5/8" IRON ROD WITH AMERICAN SURVEYING CONSULTANTS (ASC) CAP

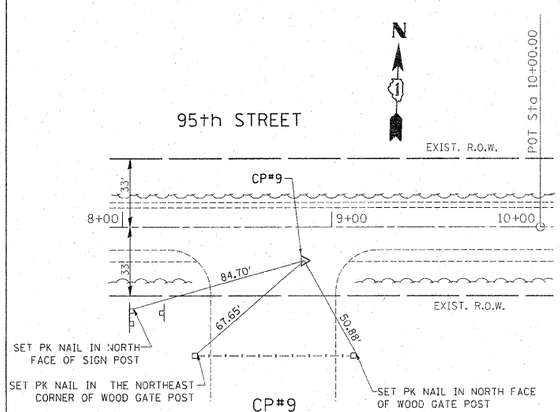

CP#9

SET PK NAIL

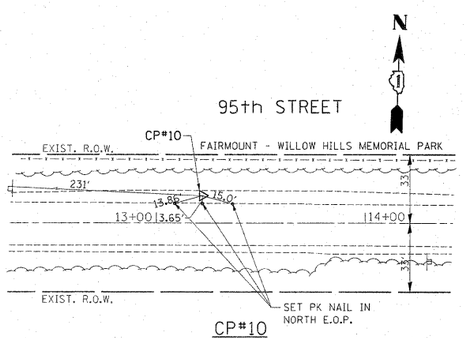

CP#10

5/8" IRON ROD WITH AMERICAN SURVEYING CONSULTANTS (ASC) CAP

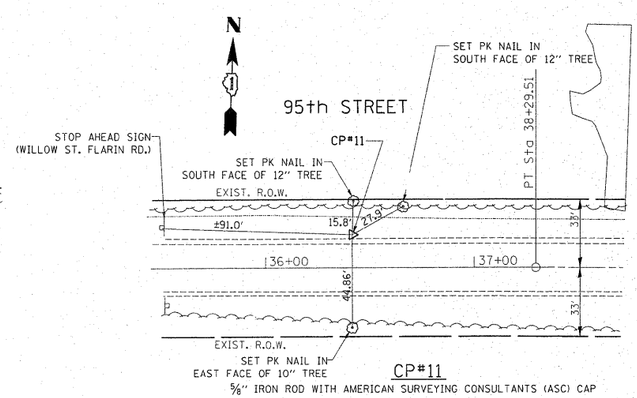

CP#11

5/8" IRON ROD WITH AMERICAN SURVEYING CONSULTANTS (ASC) CAP

REVISIONS	
NAME	DATE

ILLINOIS DEPARTMENT OF TRANSPORTATION

ALIGNMENT AND TIES
95TH ST. AT 104TH AVE.
(FLAVIN RD.)

SCALE: VERT. HORIZ. NONE

DATE 2/3/2011

DRAWN BY

CHECKED BY

PLOT DATE = 2/3/2011
FILE NAME = s:\dot-aor\proj\dots\standards\d0159537\P14449ti-sht-ATB.dgn
PLOT SCALE = 53.5463 ' / IN.
USER NAME = standpa

BM 200, ELEV 706.23
PLUG (POSSIBLE COUNTY MANAGEMENT) @ NW CORNER OF 95TH STREET AND 104TH AVENUE PLUS OR MINUS 50' N. OF LINE OF 95TH STREET AND PLUS OR MINUS 50' W. OF LINE OF 104TH AVENUE/ FLAVIN ROAD

BM 201, ELEV 723.94
SET 60D NAIL IN A 16 INCH TREE, PLUS OR MINUS 15' E. OF WOOD PICNIC TABLE, PLUS OR MINUS 750' N. OF 95TH STREET ON THE E. SIDE OF 104TH AVENUE/ FLAVIN RD.

BM 202, ELEV 707.25
N.E. CORNER OF INVERTED R.R. RAIL AND THE N.E. CORNER OF FAIRMOUNT WILLOW HILLS MEMORIAL PARK.

BM 203, ELEV 663.23
SET "□" ON S.E. CORNER OF 96" X 78" BOX CULVERT HEAD WALL, PLUS OR MINUS 2200' N. OF 95TH STREET.

BM 204, ELEV 700.59
SET "□" ON THE TOP CENTER OF A 6' CONCRETE HEAD WALL FOR A 10" RCP @ THE S.E. CORNER OF THE CRAWDAD SLOUGH F.P. ENTRANCE AND 104TH AVENUE/ FLAVIN RD.

BM 205, ELEV 709.30
SET 60D NAIL IN THE W. FACE OF A 16" TREE ON THE E. SIDE OF 104TH AVENUE/ FLAVIN ROAD, PLUS OR MINUS 33' N. OF THE FIRST SPEED LIMIT SIGN (50 MPH SIGN), S. OF CRAWDAD SLOUGH, FOREST PRESERVE ENTRANCE.

BM 206, ELEV 704.54
SET "□" ON THE W. END OF THE 18" CONCRETE HEAD WALL ON THE S. SIDE OF 95TH STREET, PLUS OR MINUS 630' W. OF 104TH AVENUE/ FLAVIN ROAD.

BM 207, ELEV 709.14
SET 60D NAIL IN THE N. FACE OF THE 4" X 6" WOOD PANEL SIGN SAYING "STOP AHEAD (104TH AVENUE/ FLAVIN ROAD)

BM 208, ELEV 711.27
SET "□" ON THE E. SIDE OF EAST CONCRETE FENCE POST TO MAPLE LAKE EAST FOREST PRESERVES

BM 209, ELEV 699.13
SET "□" IN THE TOP CENTER OF N. HEADWALL ON 95TH STREET, PLUS OR MINUS 500' E. OF 104TH AVENUE/ FLAVIN ROAD

BM 210, ELEV 724.42
SET 60D NAIL IN THE TREE ON THE S. SIDE OF 95TH STREET AND OPPOSITE "STOP AHEAD" SIGN ON THE S. SIDE OF THE STREET

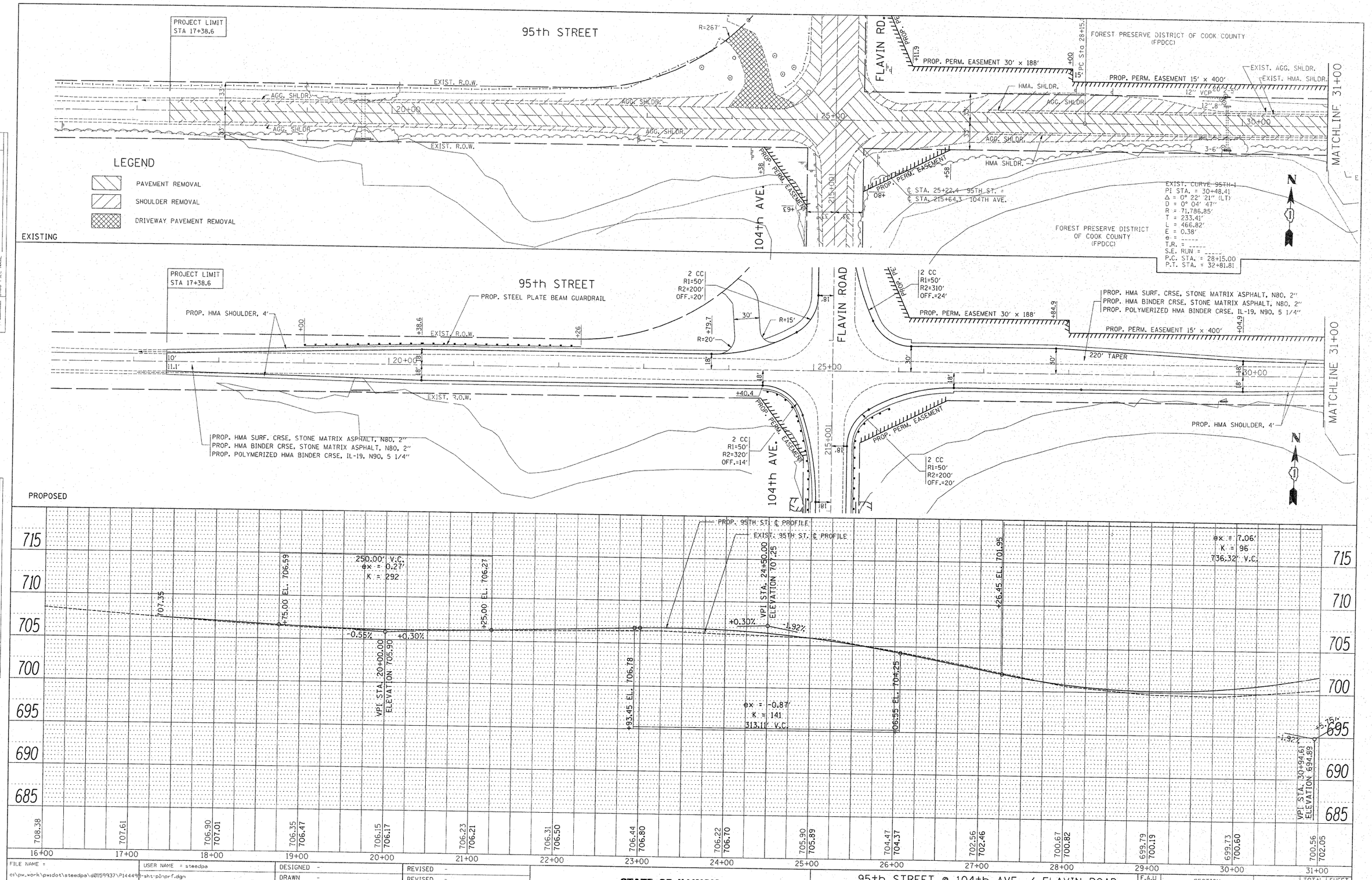

FILE NAME = c:\pw_work\pwidot\steedpa\d0159937\P144499-sht-plnprf.dgn	USER NAME = steedpa	DESIGNED -	REVISED -
		DRAWN -	REVISED -
	PLOT SCALE = 50.768 ' / IN.	CHECKED -	REVISED -
	PLOT DATE = 2/3/2011	DATE -	REVISED -

STATE OF ILLINOIS
DEPARTMENT OF TRANSPORTATION

95th STREET @ 104th AVE. / FLAVIN ROAD
EXIST. & PROP. ROADWAY PLAN

SCALE: | SHEET NO. OF SHEETS | STA. TO STA.

F.A.U RTE.	SECTION	COUNTY	TOTAL SHEETS	SHEET NO.
1566	29R-N-1	COOK	120	14

CONTRACT NO. 62377

ILLINOIS FED. AID PROJECT

PLAN: SURVEYED / PLOTTED / ALIGNMENT CHECKED / RT. OF WAY CHECKED / CADD FILE NAME / NOTE BOOK NO. / BY / DATE

PROFILE: SURVEYED / PLOTTED / GRADES CHECKED / B.M. NOTED / STRUCTURE NOTATIONS CHKD / NOTE BOOK NO. / BY / DATE

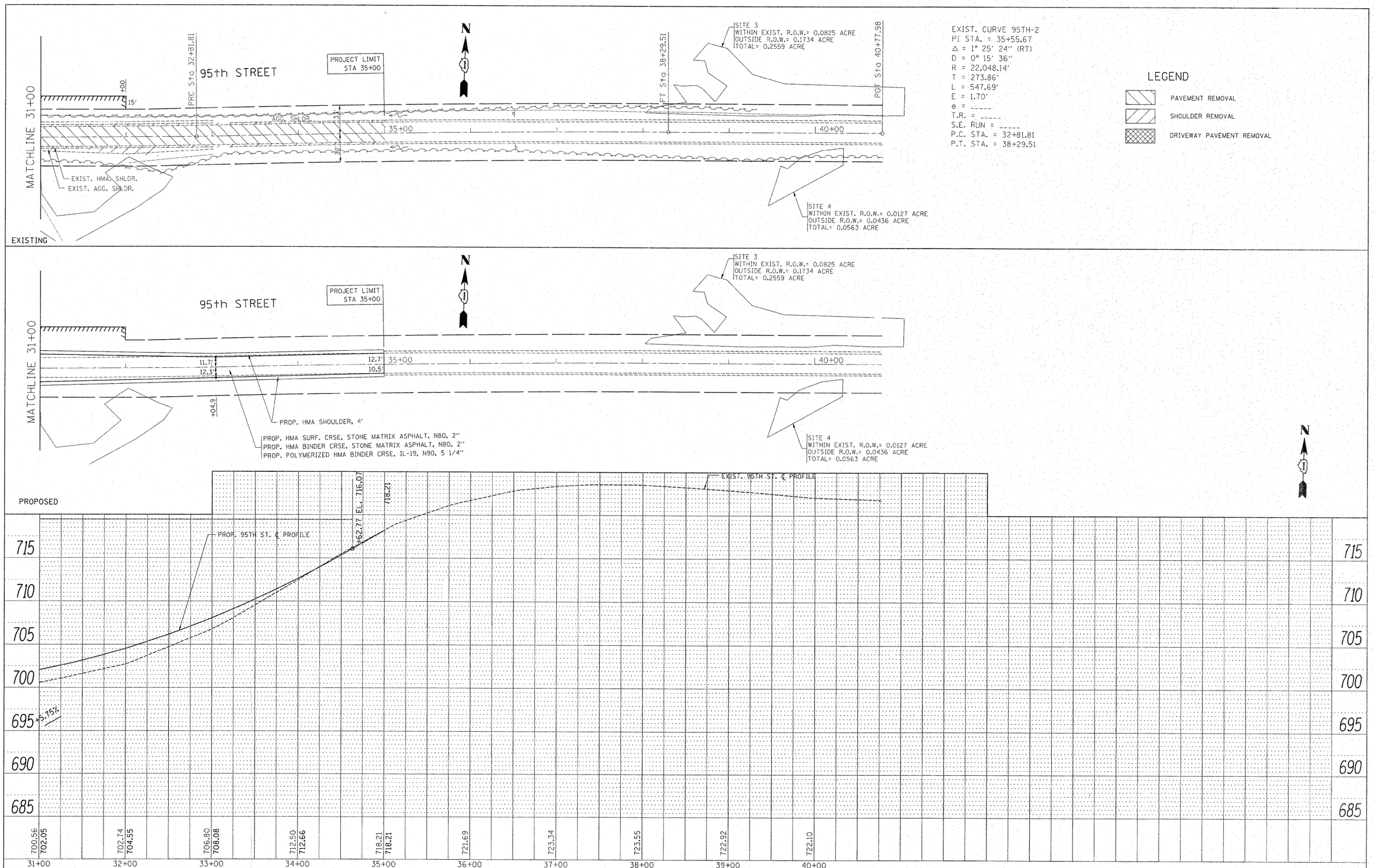

PLAN
SURVEYED
PLOTTED
ALIGNMENT CHECKED
RT OF WAY PLOTTED
CADD FILE NAME
NOTE BOOK
NO.
BY
DATE

PROFILE
SURVEYED
PLOTTED
GRADES CHECKED
RT OF WAY PLOTTED
STRUCTURE NOTATNS CHKD
NOTE BOOK
NO.
BY
DATE

FILE NAME = c:\pw_work\pwidot\steedpa\d0159937\P144498-sht-plnprf.dgn	USER NAME = steedpa	DESIGNED -	REVISED -
		DRAWN -	REVISED -
	PLOT SCALE = 50.768 ' / IN.	CHECKED -	REVISED -
	PLOT DATE = 2/3/2011	DATE -	REVISED -

STATE OF ILLINOIS
DEPARTMENT OF TRANSPORTATION

95th STREET @ 104th AVE. / FLAVIN ROAD
EXIST. & PROP. ROADWAY PLAN

SCALE: | SHEET NO. OF SHEETS | STA. TO STA.

F.A.U RTE.	SECTION	COUNTY	TOTAL SHEETS	SHEET NO.
1566	29R-N-1	COOK	120	15

CONTRACT NO. 62377

ILLINOIS FED. AID PROJECT

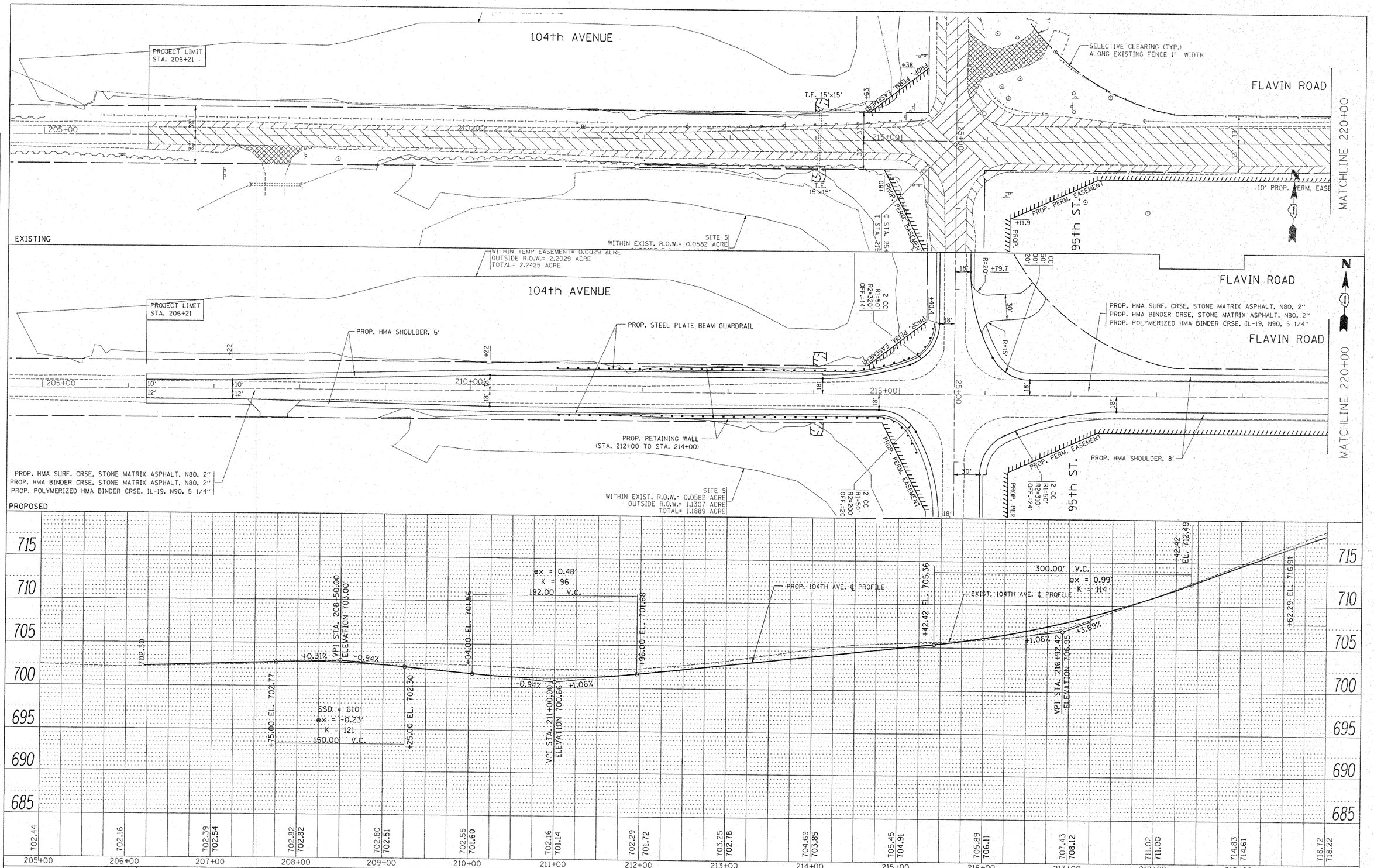

PLAN — SURVEYED / PLOTTED / ALIGNMENT CHECKED / RT. OF WAY CHECKED / CADD FILE NAME / NOTE BOOK / NO. / BY / DATE

PROFILE — SURVEYED / PLOTTED / GRADES CHECKED / B.M. NOTED / STRUCTURE NOTATIONS CHKD / NOTE BOOK / NO. / BY / DATE

FILE NAME = c:\pw_work\pwidot\steedpa\d0159937\P144498-sht-plnprf.dgn	USER NAME = steedpa	DESIGNED -	REVISED -
		DRAWN -	REVISED -
	PLOT SCALE = 50.768 ' / IN.	CHECKED -	REVISED -
	PLOT DATE = 2/3/2011	DATE -	REVISED -

STATE OF ILLINOIS
DEPARTMENT OF TRANSPORTATION

104th AVE. / FLAVIN ROAD @ 95th STREET
EXIST. & PROP. ROADWAY PLAN

SCALE: | SHEET NO. OF SHEETS | STA. TO STA.

F.A.U RTE.	SECTION	COUNTY	TOTAL SHEETS	SHEET NO.
1566	29R-N-1	COOK	120	16

CONTRACT NO. 62377

ILLINOIS FED. AID PROJECT

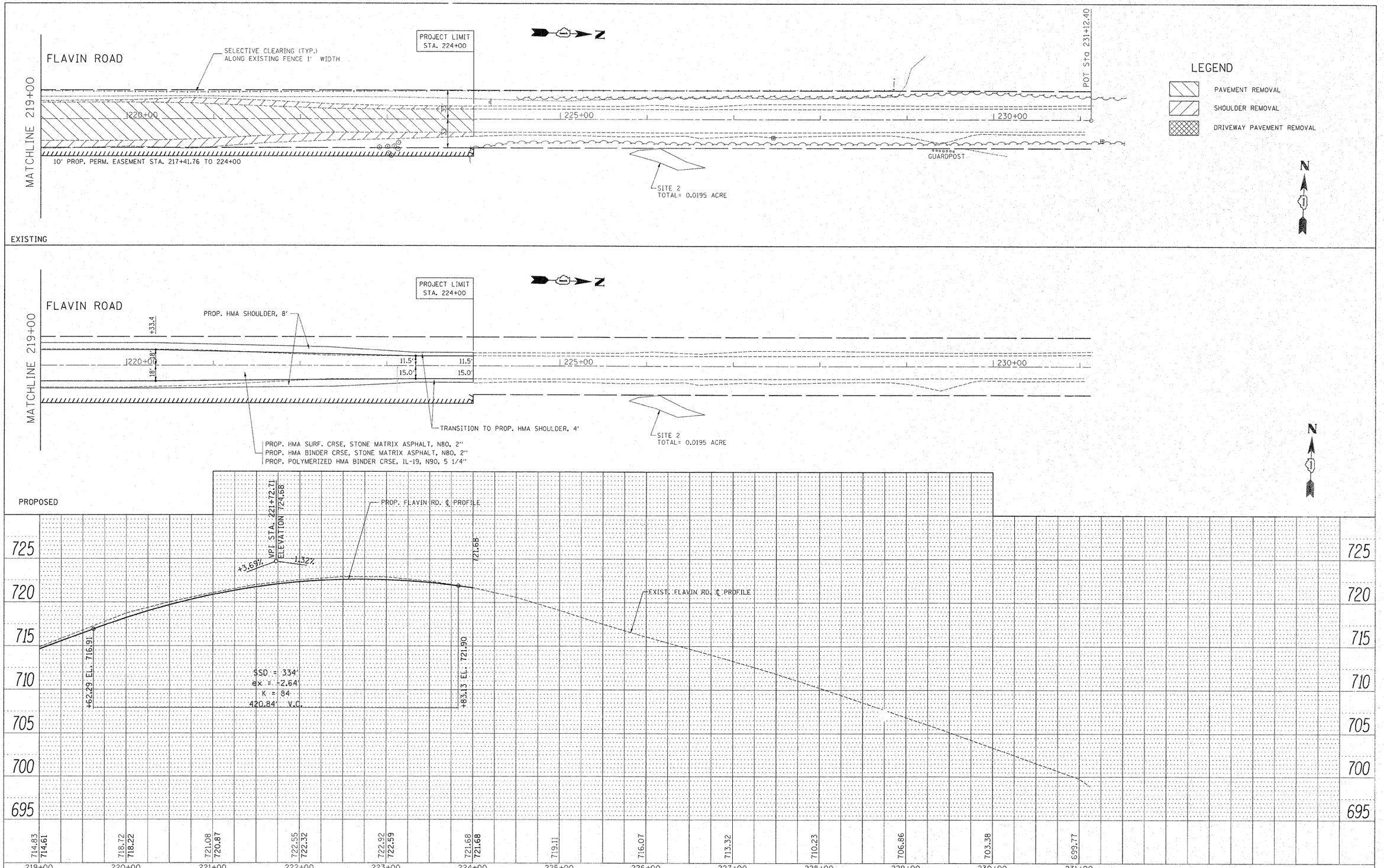

FILE NAME = c:\pw_work\pwidot\steedpa\d0159937\P144499-sht-plnprf.dgn	USER NAME = steedpa	DESIGNED -	REVISED -	STATE OF ILLINOIS DEPARTMENT OF TRANSPORTATION	104th AVE. / FLAVIN ROAD @ 95th STREET EXIST. & PROP. ROADWAY PLAN	F.A.U RTE. 1566	SECTION 29R-N-1	COUNTY COOK	TOTAL SHEETS 120	SHEET NO. 17
	PLOT SCALE = 50.768 ' / IN.	DRAWN -	REVISED -					CONTRACT NO. 62377		
	PLOT DATE = 2/3/2011	CHECKED -	REVISED -		SCALE: SHEET NO. OF SHEETS STA. TO STA.			ILLINOIS FED. AID PROJECT		
		DATE -	REVISED -							

*REF-PMK01
*REF-PMK02

LEGEND

- PAVEMENT REMOVAL
- TEMPORARY PAVEMENT
- TRAFFIC LANE

1. TEMPORARY PAVEMENT MARKING DOUBLE YELLOW CENTERLINE, 4"
2. TEMPORARY PAVEMENT MARKING EDGE LINE, 4" WHITE
3. TEMPORARY CONCRETE BARRIER
4. VERTICAL PANELS OR DRUMS WITH STEADY BURNING LIGHT
5. EXISTING PAVEMENT
6. PROPOSED POLYMERIZED HOT-MIX ASPHALT SURFACE COURSE, STONE MATRIX ASPHALT, N80, 2"
7. PROPOSED POLYMERIZED HOT-MIX ASPHALT BINDER COURSE, STONE MATRIX ASPHALT, N80, 2"
8. PROPOSED POLYMERIZED HOT-MIX ASPHALT BINDER COURSE, IL-19, N90, 5¼"
9. PROPOSED AGGREGATE SUBGRADE, 12"
10. PROPOSED RETAINING WALL
11. PROPOSED HOT-MIX ASPHALT SHOULDER, 4'
12. PROPOSED HOT-MIX ASPHALT SHOULDER, 6'
13. PROPOSED HOT-MIX ASPHALT SHOULDER, 8'
14. PROPOSED STEEL PLATE BEAM GUARDRAIL
15. PROPOSED GRADING AND SHAPING DITCHES

PRE-STAGE

PRE-STAGE TYPICAL SECTION (95TH ST.)
STA. 14+52 TO STA. 25+22.4

NOTE:
* TEMPORARY CONCRETE BARRIER
STA. 19+00 TO STA. 19+51
STA. 19+85 TO STA. 24+00

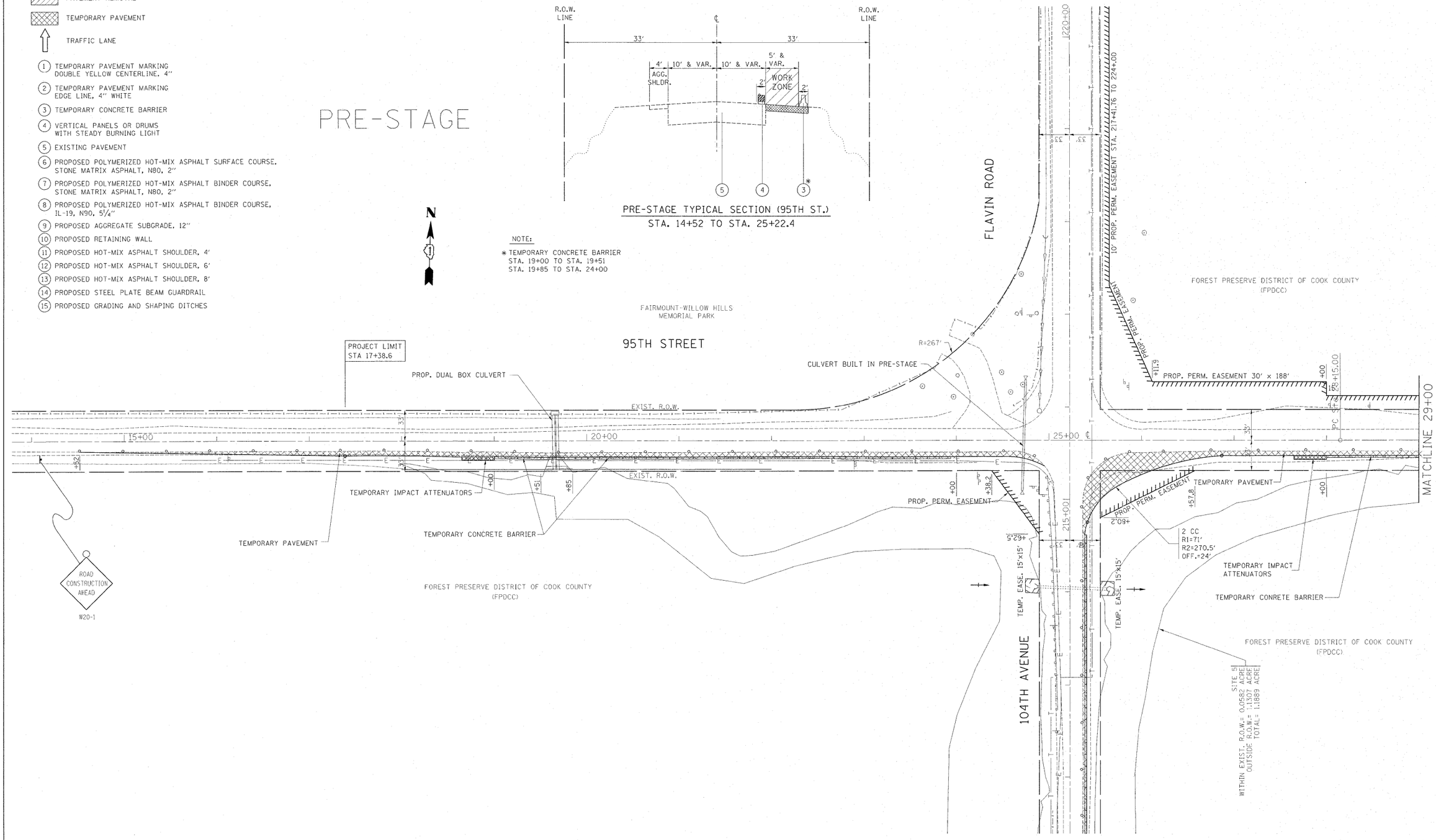

FILE NAME = c:\pw_work\pwidot\steedpa\d015991\5\P144499-Design.dgn	USER NAME = steedpa	DESIGNED -	REVISED -	STATE OF ILLINOIS DEPARTMENT OF TRANSPORTATION	SUGGESTED STAGING AND TRAFFIC CONTROL PLAN - PRE-STAGE 95th STREET @ 104th AVENUE / FLAVIN ROAD	F.A.U RTE.	SECTION	COUNTY	TOTAL SHEETS	SHEET NO.
		DRAWN -	REVISED -			1566	29 R-N-1	COOK	120	18
	PLOT SCALE = 50.0000 ' / in.	CHECKED -	REVISED -					CONTRACT NO. 62377		
	PLOT DATE = 12/6/2011	DATE -	REVISED -		SCALE: SHEET NO. OF SHEETS STA. TO STA.			ILLINOIS FED. AID PROJECT		

LEGEND

- PAVEMENT REMOVAL
- TEMPORARY PAVEMENT
- TRAFFIC LANE
- (1) TEMPORARY PAVEMENT MARKING DOUBLE YELLOW CENTERLINE, 4"
- (2) TEMPORARY PAVEMENT MARKING EDGE LINE, 4" WHITE
- (3) TEMPORARY CONCRETE BARRIER
- (4) VERTICAL PANELS OR DRUMS WITH STEADY BURNING LIGHT
- (5) EXISTING PAVEMENT
- (6) PROPOSED POLYMERIZED HOT-MIX ASPHALT SURFACE COURSE, STONE MATRIX ASPHALT, N80, 2"
- (7) PROPOSED POLYMERIZED HOT-MIX ASPHALT BINDER COURSE, STONE MATRIX ASPHALT, N80, 2"
- (8) PROPOSED POLYMERIZED HOT-MIX ASPHALT BINDER COURSE, IL-19, N90, 5¼"
- (9) PROPOSED AGGREGATE SUBGRADE, 12"
- (10) PROPOSED RETAINING WALL
- (11) PROPOSED HOT-MIX ASPHALT SHOULDER, 4'
- (12) PROPOSED HOT-MIX ASPHALT SHOULDER, 6'
- (13) PROPOSED HOT-MIX ASPHALT SHOULDER, 8'
- (14) PROPOSED STEEL PLATE BEAM GUARDRAIL
- (15) PROPOSED GRADING AND SHAPING DITCHES

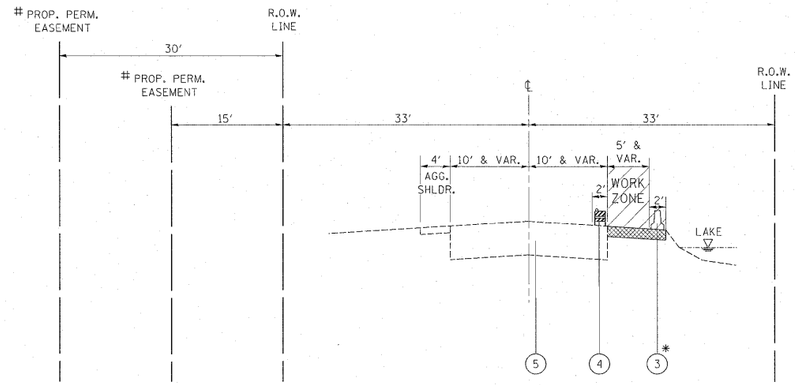

PRE-STAGE

PRE-STAGE TYPICAL SECTION (95TH ST.)
STA. 25+22.4 TO STA. 37+91

NOTE:
PERMANENT EASEMENT
(30' DISTANCE FROM EXISTING R.O.W.)
STA. 26+11 TO STA. 28+00

PERMANENT EASEMENT
(15' DISTANCE FROM EXISTING R.O.W.)
STA. 28+00 TO STA. 32+00

* TEMPORARY CONCRETE BARRIER
STA. 28+00 TO STA. 32+03

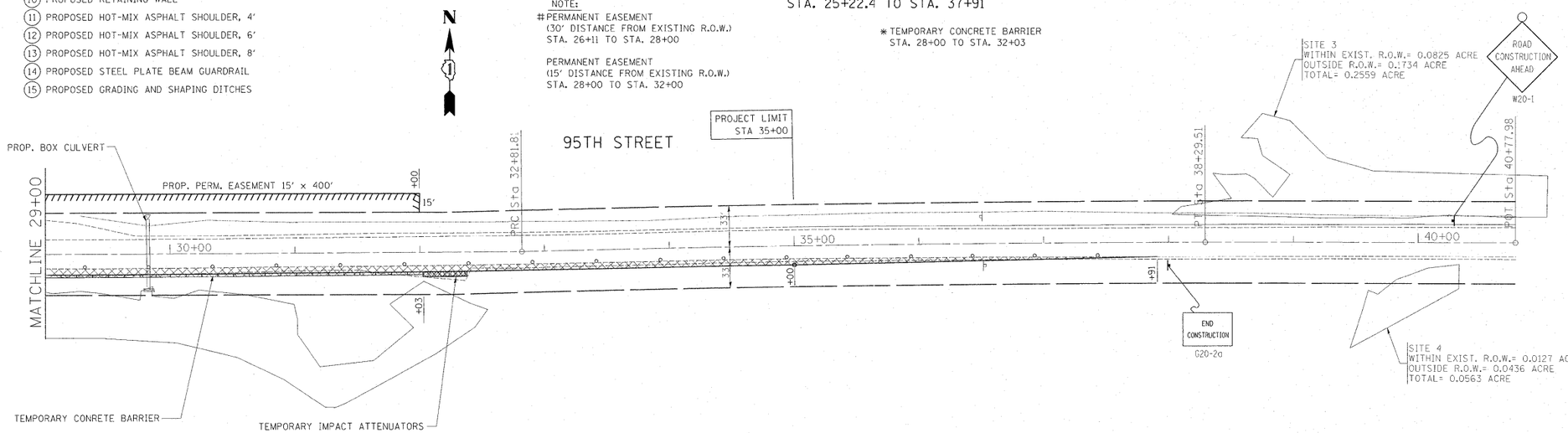

FILE NAME = c:\pw_work\pwidot\steedpa\d0159915\P144499-Design.dgn	USER NAME = steedpa	DESIGNED -	REVISED -	STATE OF ILLINOIS DEPARTMENT OF TRANSPORTATION	SUGGESTED STAGING AND TRAFFIC CONTROL PLAN - PRE-STAGE 95th STREET @ 104th AVENUE / FLAVIN ROAD	F.A.U RTE.	SECTION	COUNTY	TOTAL SHEETS / SHEET NO.
		DRAWN -	REVISED -			1566	29 R-N-1	COOK	120 / 19
	PLOT SCALE = 50.0000 ' / in.	CHECKED -	REVISED -					CONTRACT NO. 62377	
	PLOT DATE = 12/6/2011	DATE -	REVISED -		SCALE: SHEET NO. OF SHEETS STA. TO STA.		ILLINOIS FED. AID PROJECT		

LEGEND

- PAVEMENT REMOVAL
- TEMPORARY PAVEMENT
- TRAFFIC LANE

1. TEMPORARY PAVEMENT MARKING DOUBLE YELLOW CENTERLINE, 4"
2. TEMPORARY PAVEMENT MARKING EDGE LINE, 4" WHITE
3. TEMPORARY CONCRETE BARRIER
4. VERTICAL PANELS OR DRUMS WITH STEADY BURNING LIGHT
5. EXISTING PAVEMENT
6. PROPOSED POLYMERIZED HOT-MIX ASPHALT SURFACE COURSE, STONE MATRIX ASPHALT, N80, 2"
7. PROPOSED POLYMERIZED HOT-MIX ASPHALT BINDER COURSE, STONE MATRIX ASPHALT, N80, 2"
8. PROPOSED POLYMERIZED HOT-MIX ASPHALT BINDER COURSE, IL-19, N90, 5¼"
9. PROPOSED AGGREGATE SUBGRADE, 12"
10. PROPOSED RETAINING WALL
11. PROPOSED HOT-MIX ASPHALT SHOULDER, 4'
12. PROPOSED HOT-MIX ASPHALT SHOULDER, 6'
13. PROPOSED HOT-MIX ASPHALT SHOULDER, 8'
14. PROPOSED STEEL PLATE BEAM GUARDRAIL
15. PROPOSED GRADING AND SHAPING DITCHES

PRE-STAGE

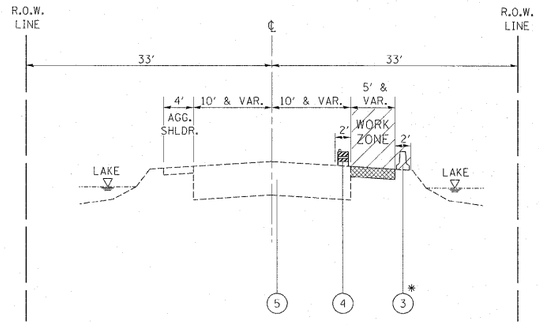

PRE-STAGE TYPICAL SECTION (104TH AVE.)
STA. 203+49 TO STA. 215+64.3

NOTE:
* TEMPORARY CONCRETE BARRIER STA. 208+00 TO STA. 214+73

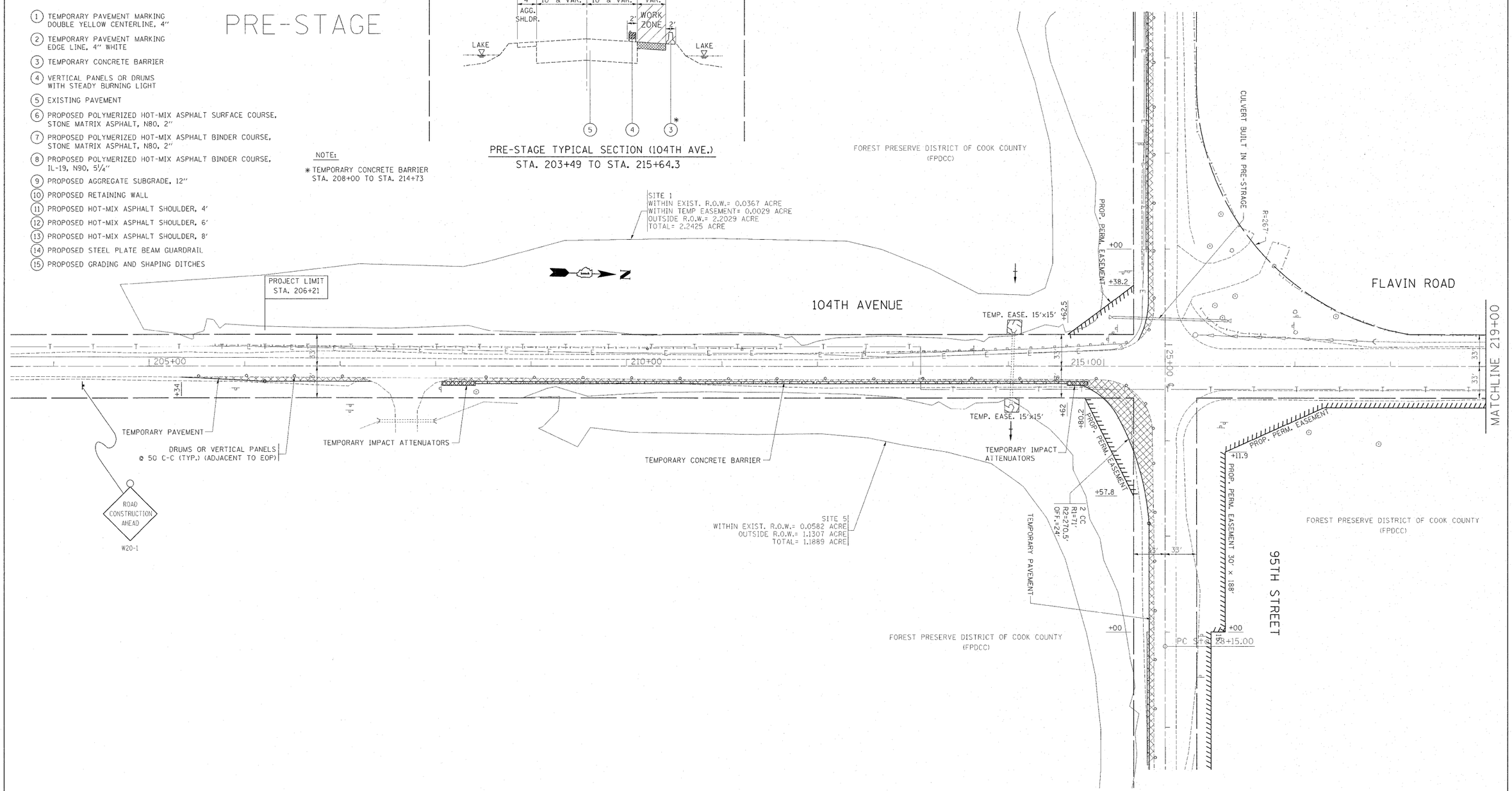

FILE NAME = c:\pw_work\pwidot\steedpa\d0159915\P144499-Design.dgn	USER NAME = steedpa	DESIGNED -	REVISED -
		DRAWN -	REVISED -
	PLOT SCALE = 50.0000 ' / in.	CHECKED -	REVISED -
	PLOT DATE = 12/6/2011	DATE -	REVISED -

STATE OF ILLINOIS
DEPARTMENT OF TRANSPORTATION

SUGGESTED STAGING AND TRAFFIC CONTROL PLAN - PRE-STAGE
95th STREET @ 104th AVENUE / FLAVIN ROAD

SCALE: | SHEET NO. OF SHEETS | STA. TO STA.

F.A.U RTE.	SECTION	COUNTY	TOTAL SHEETS	SHEET NO.
1566	29 R-N-1	COOK	120	20

CONTRACT NO. 62377

ILLINOIS FED. AID PROJECT

LEGEND

- PAVEMENT REMOVAL
- TEMPORARY PAVEMENT
- TRAFFIC LANE

1. TEMPORARY PAVEMENT MARKING DOUBLE YELLOW CENTERLINE, 4"
2. TEMPORARY PAVEMENT MARKING EDGE LINE, 4" WHITE
3. TEMPORARY CONCRETE BARRIER
4. VERTICAL PANELS OR DRUMS WITH STEADY BURNING LIGHT
5. EXISTING PAVEMENT
6. PROPOSED POLYMERIZED HOT-MIX ASPHALT SURFACE COURSE, STONE MATRIX ASPHALT, N80, 2"
7. PROPOSED POLYMERIZED HOT-MIX ASPHALT BINDER COURSE, STONE MATRIX ASPHALT, N80, 2"
8. PROPOSED POLYMERIZED HOT-MIX ASPHALT BINDER COURSE, IL-19, N90, 5¼"
9. PROPOSED AGGREGATE SUBGRADE, 12"
10. PROPOSED RETAINING WALL
11. PROPOSED HOT-MIX ASPHALT SHOULDER, 4'
12. PROPOSED HOT-MIX ASPHALT SHOULDER, 6'
13. PROPOSED HOT-MIX ASPHALT SHOULDER, 8'
14. PROPOSED STEEL PLATE BEAM GUARDRAIL
15. PROPOSED GRADING AND SHAPING DITCHES

PRE-STAGE

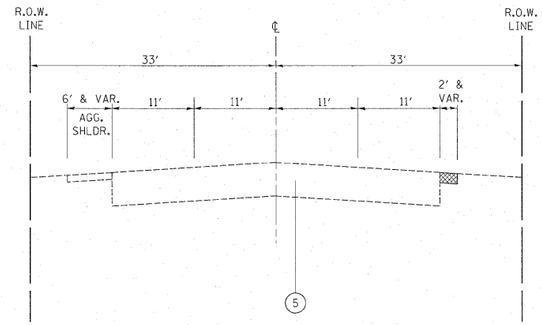

PRE-STAGE TYPICAL SECTION (FLAVIN RD.)
STA. 215+64.3 TO STA. 226+67

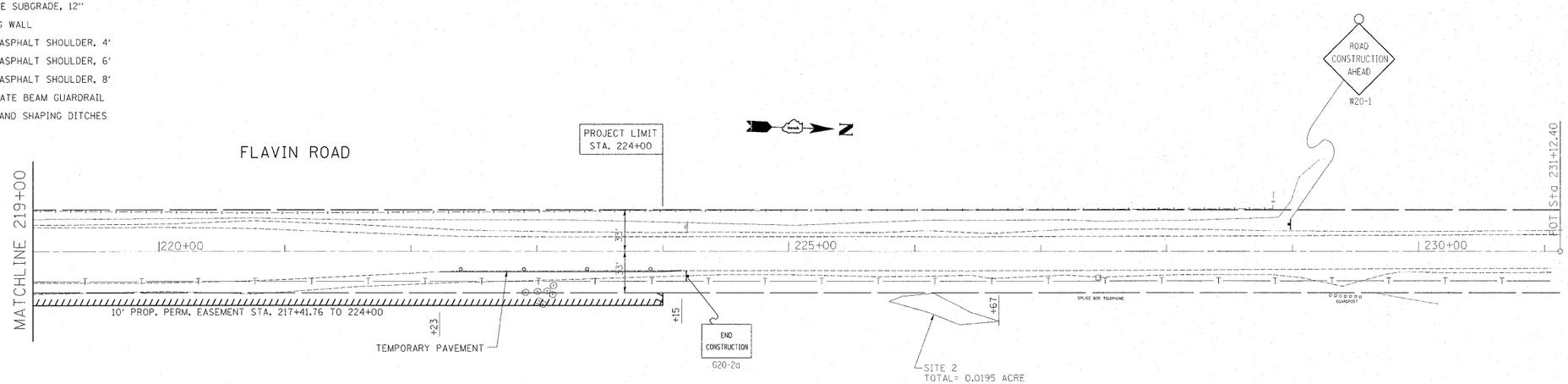

FILE NAME = c:\pw_work\pwidot\steedpa\d0159915\P144499-Design.dgn	USER NAME = steedpa	DESIGNED -	REVISED -	STATE OF ILLINOIS DEPARTMENT OF TRANSPORTATION	SUGGESTED STAGING AND TRAFFIC CONTROL PLAN - PRE-STAGE 95th STREET @ 104th AVENUE / FLAVIN ROAD	F.A.U RTE.	SECTION	COUNTY	TOTAL SHEETS / SHEET NO.
	PLOT SCALE = 50.0000 ' / in.	DRAWN -	REVISED -			1566	29 R-N-1	COOK	120 / 21
	PLOT DATE = 12/6/2011	CHECKED -	REVISED -					CONTRACT NO. 62377	
		DATE -	REVISED -		SCALE: SHEET NO. OF SHEETS STA. TO STA.		ILLINOIS FED. AID PROJECT		

LEGEND

- PAVEMENT REMOVAL
- TEMPORARY PAVEMENT
- TRAFFIC LANE

1. TEMPORARY PAVEMENT MARKING DOUBLE YELLOW CENTERLINE, 4"
2. TEMPORARY PAVEMENT MARKING EDGE LINE, 4" WHITE
3. TEMPORARY CONCRETE BARRIER
4. VERTICAL PANELS OR DRUMS WITH STEADY BURNING LIGHT
5. EXISTING PAVEMENT
6. PROPOSED POLYMERIZED HOT-MIX ASPHALT SURFACE COURSE, STONE MATRIX ASPHALT, N80, 2"
7. PROPOSED POLYMERIZED HOT-MIX ASPHALT BINDER COURSE, STONE MATRIX ASPHALT, N80, 2"
8. PROPOSED POLYMERIZED HOT-MIX ASPHALT BINDER COURSE, IL-19, N90, 5¼"
9. PROPOSED AGGREGATE SUBGRADE, 12"
10. PROPOSED RETAINING WALL
11. PROPOSED HOT-MIX ASPHALT SHOULDER, 4'
12. PROPOSED HOT-MIX ASPHALT SHOULDER, 6'
13. PROPOSED HOT-MIX ASPHALT SHOULDER, 8'
14. PROPOSED STEEL PLATE BEAM GUARDRAIL
15. PROPOSED GRADING AND SHAPING DITCHES

STAGE I

STAGE I TYPICAL SECTION (95TH ST.)
STA. 14+52 TO STA. 25+22.4

NOTE:
* PROPOSED GUARDRAIL STA. 19+00 TO STA. 22+26
** TEMPORARY CONCRETE BARRIER STA. 19+00 TO STA. 19+51 STA. 19+85 TO STA. 24+00

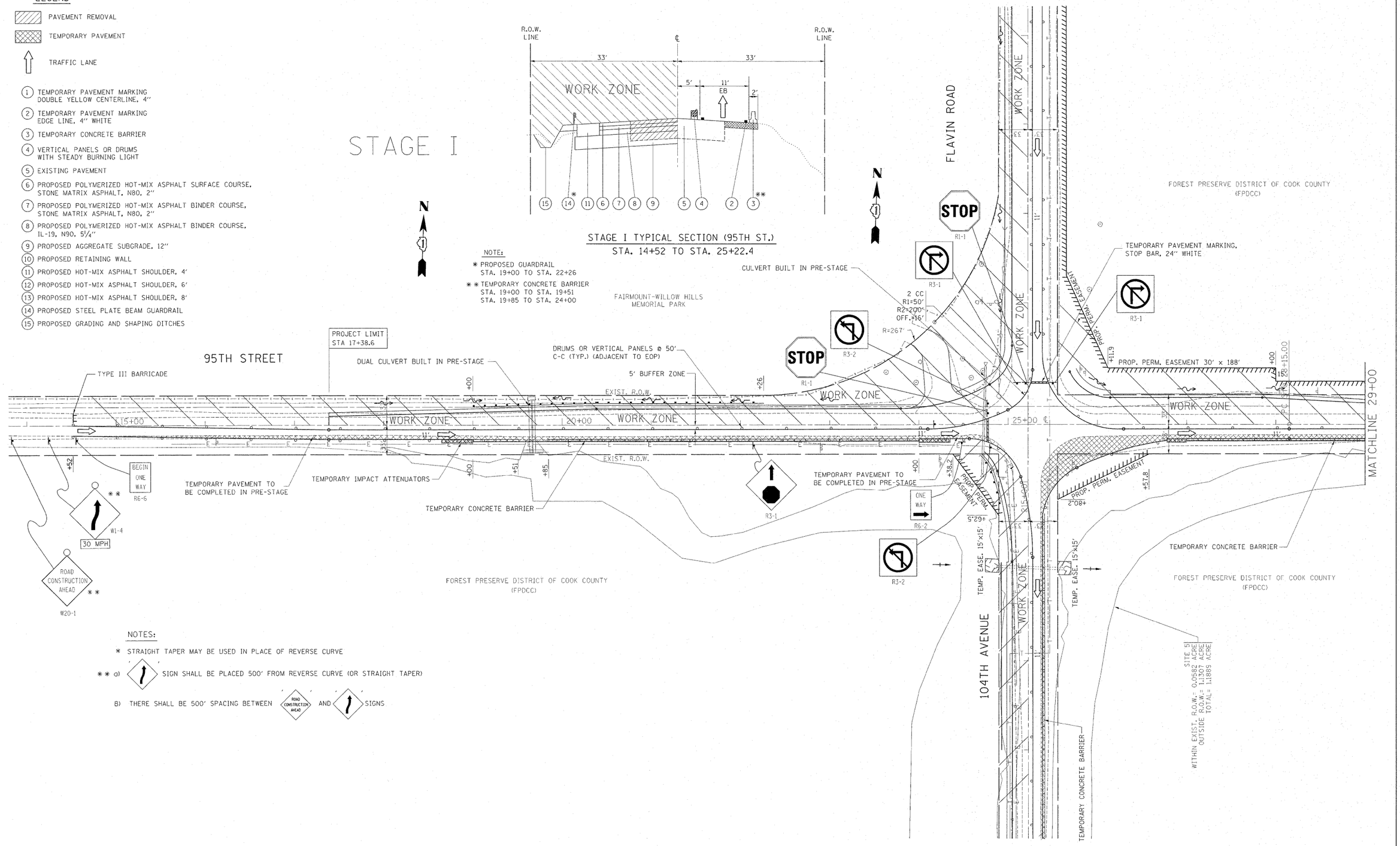

NOTES:

* STRAIGHT TAPER MAY BE USED IN PLACE OF REVERSE CURVE

** a) SIGN SHALL BE PLACED 500' FROM REVERSE CURVE (OR STRAIGHT TAPER)

B) THERE SHALL BE 500' SPACING BETWEEN ROAD CONSTRUCTION AHEAD AND SIGNS

FILE NAME = c:\pw_work\pwidot\steedpa\d0159915\P144499-Design.dgn	USER NAME = steedpa	DESIGNED -	REVISED -
		DRAWN -	REVISED -
	PLOT SCALE = 50.0000 ' / in.	CHECKED -	REVISED -
	PLOT DATE = 12/6/2011	DATE -	REVISED -

STATE OF ILLINOIS
DEPARTMENT OF TRANSPORTATION

SUGGESTED STAGING AND TRAFFIC CONTROL PLAN - STAGE I
95th STREET @ 104th AVENUE / FLAVIN ROAD

SCALE: | SHEET NO. OF SHEETS | STA. TO STA.

F.A.U RTE.	SECTION	COUNTY	TOTAL SHEETS	SHEET NO.
1566	29 R-N-1	COOK	120	22

CONTRACT NO. 62377

ILLINOIS FED. AID PROJECT

LEGEND

- PAVEMENT REMOVAL
- TEMPORARY PAVEMENT
- TRAFFIC LANE

1. TEMPORARY PAVEMENT MARKING DOUBLE YELLOW CENTERLINE, 4"
2. TEMPORARY PAVEMENT MARKING EDGE LINE, 4" WHITE
3. TEMPORARY CONCRETE BARRIER
4. VERTICAL PANELS OR DRUMS WITH STEADY BURNING LIGHT
5. EXISTING PAVEMENT
6. PROPOSED POLYMERIZED HOT-MIX ASPHALT SURFACE COURSE, STONE MATRIX ASPHALT, N80, 2"
7. PROPOSED POLYMERIZED HOT-MIX ASPHALT BINDER COURSE, STONE MATRIX ASPHALT, N80, 2"
8. PROPOSED POLYMERIZED HOT-MIX ASPHALT BINDER COURSE, IL-19, N90, 5¼"
9. PROPOSED AGGREGATE SUBGRADE, 12"
10. PROPOSED RETAINING WALL
11. PROPOSED HOT-MIX ASPHALT SHOULDER, 4'
12. PROPOSED HOT-MIX ASPHALT SHOULDER, 6'
13. PROPOSED HOT-MIX ASPHALT SHOULDER, 8'
14. PROPOSED STEEL PLATE BEAM GUARDRAIL
15. PROPOSED GRADING AND SHAPING DITCHES

STAGE I

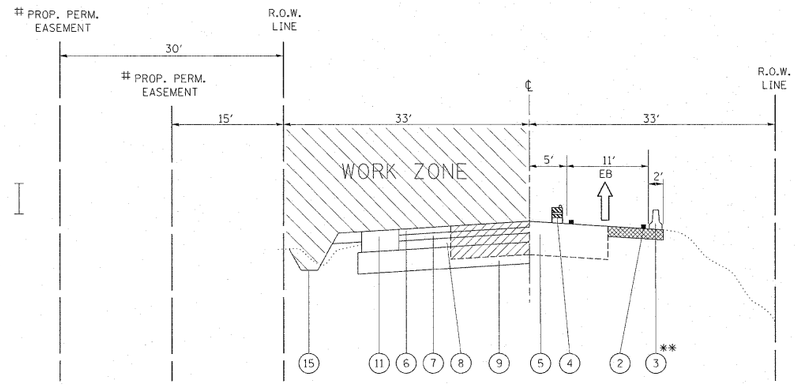

STAGE I TYPICAL SECTION (95TH ST.)
STA. 25+22.4 TO STA. 37+91

NOTE:
PERMANENT EASEMENT
(30' DISTANCE FROM EXISTING R.O.W.)
STA. 26+11 TO STA. 28+00

PERMANENT EASEMENT
(15' DISTANCE FROM EXISTING R.O.W.)
STA. 28+00 TO STA. 32+00

** TEMPORARY CONCRETE BARRIER
STA. 27+00 TO STA. 32+00

N

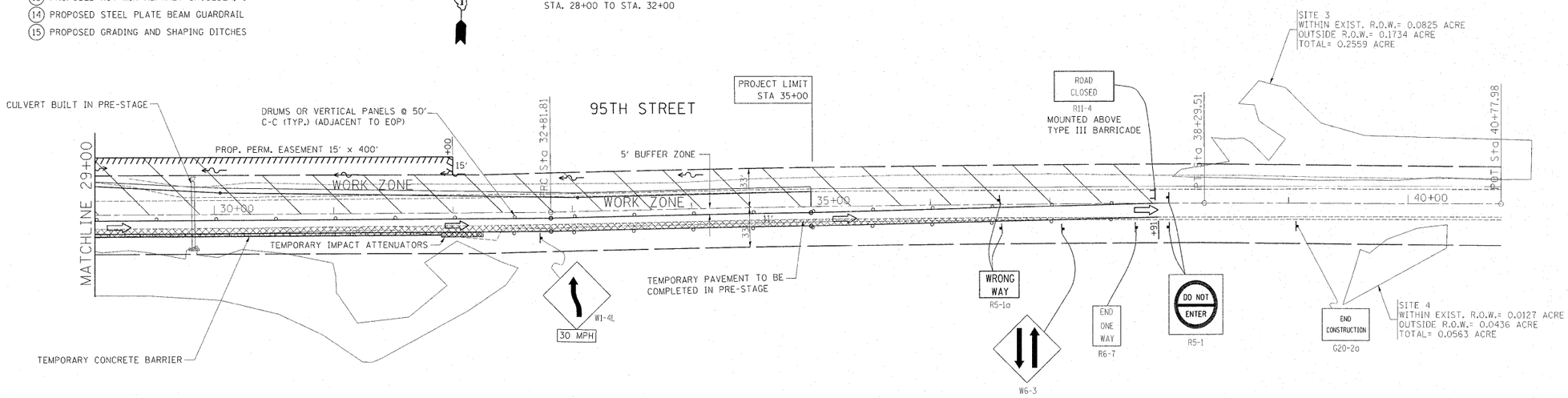

FILE NAME = c:\pw_work\pwidot\steedpa\d0159915\P144499-Design.dgn	USER NAME = steedpa	DESIGNED -	REVISED -
		DRAWN -	REVISED -
	PLOT SCALE = 50.0000 ' / in.	CHECKED -	REVISED -
	PLOT DATE = 12/6/2011	DATE -	REVISED -

STATE OF ILLINOIS
DEPARTMENT OF TRANSPORTATION

SUGGESTED STAGING AND TRAFFIC CONTROL PLAN - STAGE I
95th STREET @ 104th AVENUE / FLAVIN ROAD

SCALE: | SHEET NO. OF SHEETS | STA. TO STA.

F.A.U RTE.	SECTION	COUNTY	TOTAL SHEETS	SHEET NO.
1566	29 R-N-1	COOK	120	23

CONTRACT NO. 62377

ILLINOIS FED. AID PROJECT

LEGEND

- PAVEMENT REMOVAL
- TEMPORARY PAVEMENT
- TRAFFIC LANE
- (1) TEMPORARY PAVEMENT MARKING DOUBLE YELLOW CENTERLINE, 4"
- (2) TEMPORARY PAVEMENT MARKING EDGE LINE, 4" WHITE
- (3) TEMPORARY CONCRETE BARRIER
- (4) VERTICAL PANELS OR DRUMS WITH STEADY BURNING LIGHT
- (5) EXISTING PAVEMENT
- (6) PROPOSED POLYMERIZED HOT-MIX ASPHALT SURFACE COURSE, STONE MATRIX ASPHALT, N80, 2"
- (7) PROPOSED POLYMERIZED HOT-MIX ASPHALT BINDER COURSE, STONE MATRIX ASPHALT, N80, 2"
- (8) PROPOSED POLYMERIZED HOT-MIX ASPHALT BINDER COURSE, IL-19, N90, 5¼"
- (9) PROPOSED AGGREGATE SUBGRADE, 12"
- (10) PROPOSED RETAINING WALL
- (11) PROPOSED HOT-MIX ASPHALT SHOULDER, 4'
- (12) PROPOSED HOT-MIX ASPHALT SHOULDER, 6'
- (13) PROPOSED HOT-MIX ASPHALT SHOULDER, 8'
- (14) PROPOSED STEEL PLATE BEAM GUARDRAIL
- (15) PROPOSED GRADING AND SHAPING DITCHES

STAGE I

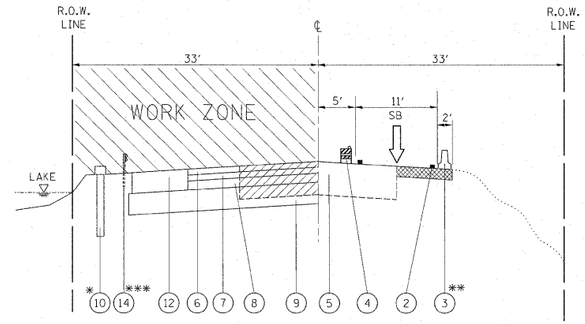

NOTE:

* PROPOSED PERMANENT RETAINING WALL STA. 212+00 TO STA. 214+00 (WILL BE BUILT 3' FROM THE EXISTING R.O.W.)

** TEMPORARY CONCRETE BARRIER STA. 208+03 TO STA. 214+62

*** PROPOSED STEEL PLATE BEAM GUARDRAIL STA. 211+00 TO STA. 215+30

STAGE I TYPICAL SECTION (104TH AVE.)
STA. 203+49 TO STA. 215+64.3

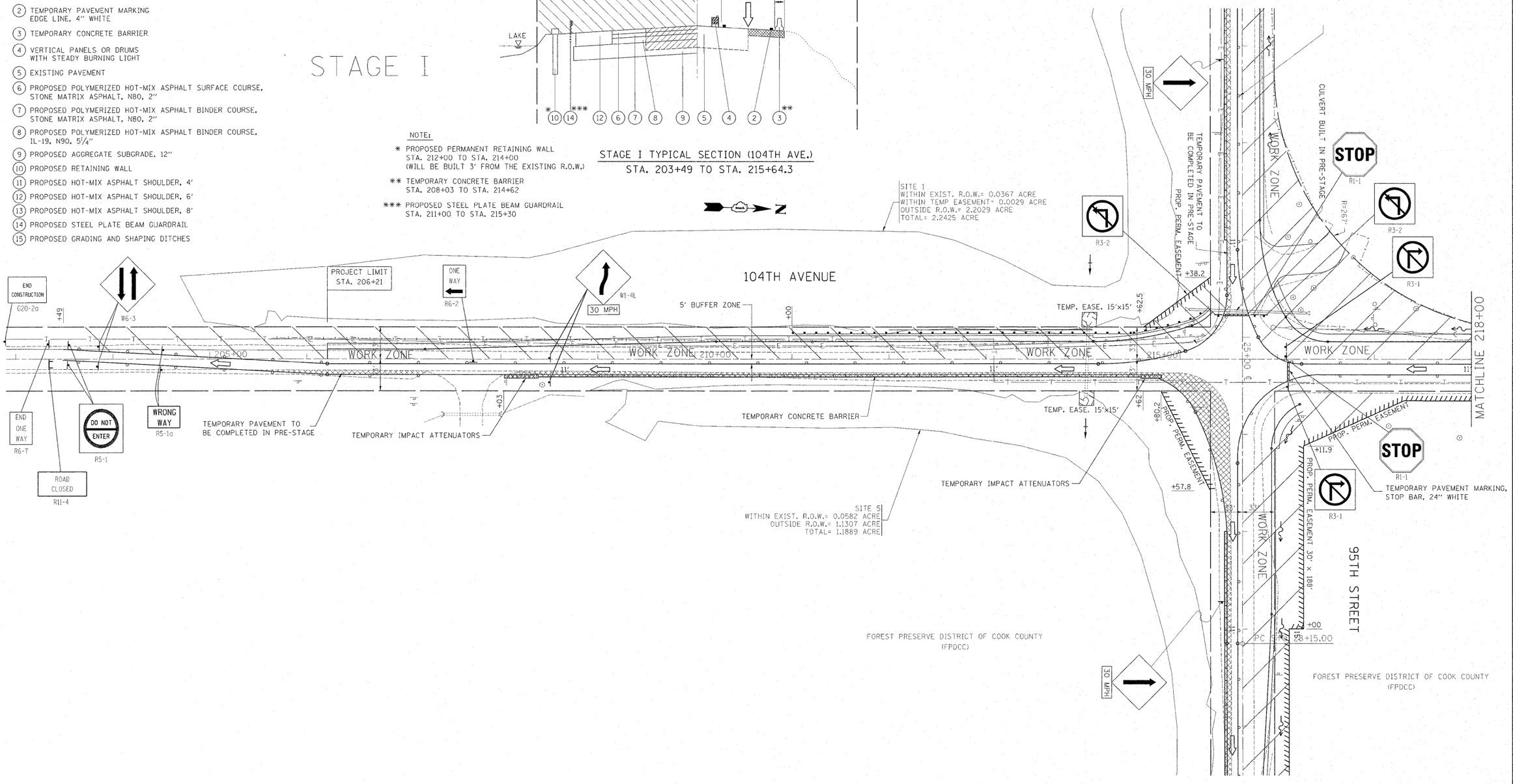

FILE NAME = c:\pw_work\pwidot\steedpa\d0159915\P144499-Design.dgn	USER NAME = steedpa	DESIGNED -	REVISED -	STATE OF ILLINOIS DEPARTMENT OF TRANSPORTATION	SUGGESTED STAGING AND TRAFFIC CONTROL PLAN - STAGE I 95th STREET @ 104th AVENUE / FLAVIN ROAD	F.A.U RTE.	SECTION	COUNTY	TOTAL SHEETS / SHEET NO.
	PLOT SCALE = 50.0000 ' / in.	DRAWN -	REVISED -			1566	29 R-N-1	COOK	120 / 24
	PLOT DATE = 12/6/2011	CHECKED -	REVISED -					CONTRACT NO. 62377	
		DATE -	REVISED -		SCALE: SHEET NO. OF SHEETS STA. TO STA.			ILLINOIS FED. AID PROJECT	

LEGEND

- PAVEMENT REMOVAL
- TEMPORARY PAVEMENT *
- TRAFFIC LANE

1. TEMPORARY PAVEMENT MARKING DOUBLE YELLOW CENTERLINE, 4"
2. TEMPORARY PAVEMENT MARKING EDGE LINE, 4" WHITE
3. TEMPORARY CONCRETE BARRIER
4. VERTICAL PANELS OR DRUMS WITH STEADY BURNING LIGHT
5. EXISTING PAVEMENT
6. PROPOSED POLYMERIZED HOT-MIX ASPHALT SURFACE COURSE, STONE MATRIX ASPHALT, N80, 2"
7. PROPOSED POLYMERIZED HOT-MIX ASPHALT BINDER COURSE, STONE MATRIX ASPHALT, N80, 2"
8. PROPOSED POLYMERIZED HOT-MIX ASPHALT BINDER COURSE, IL-19, N90, 5¼"
9. PROPOSED AGGREGATE SUBGRADE, 12"
10. PROPOSED RETAINING WALL
11. PROPOSED HOT-MIX ASPHALT SHOULDER, 4'
12. PROPOSED HOT-MIX ASPHALT SHOULDER, 6'
13. PROPOSED HOT-MIX ASPHALT SHOULDER, 8'
14. PROPOSED STEEL PLATE BEAM GUARDRAIL
15. PROPOSED GRADING AND SHAPING DITCHES

STAGE I

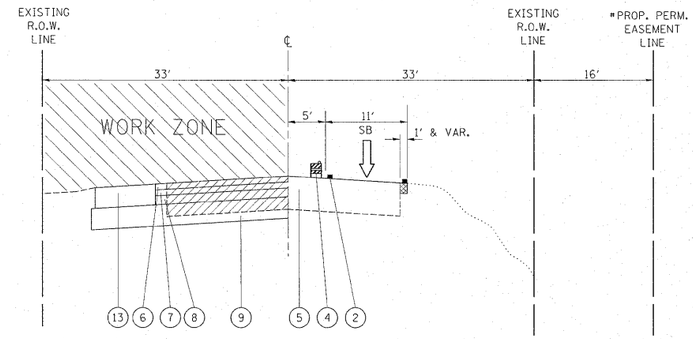

STAGE I TYPICAL SECTION (FLAVIN RD.)
STA. 215+64.3 TO STA. 226+67

NOTE:
PERMANENT EASEMENT STA. 217+31 TO STA. 224+00
* TEMPORARY PAVEMENT STA. 222+23 TO STA. 224+15

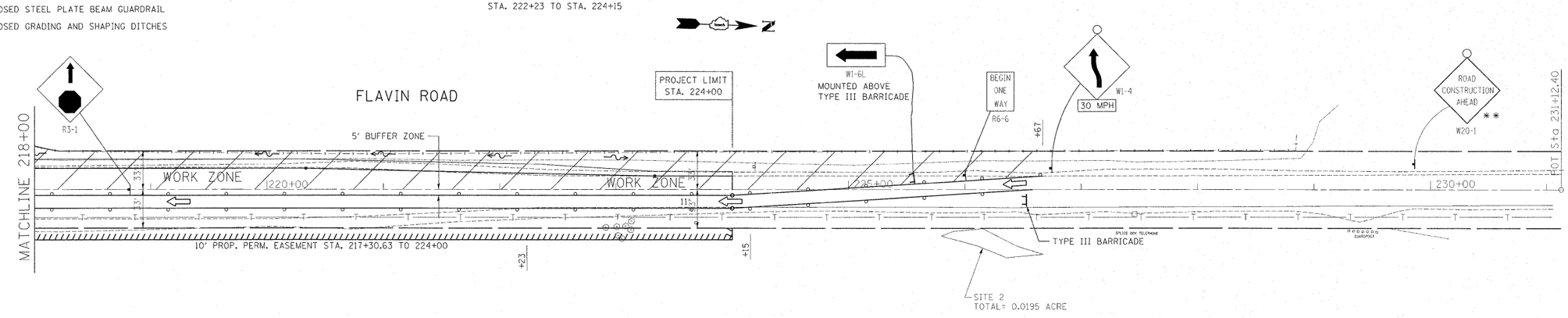

NOTES:

* STRAIGHT TAPER MAY BE USED IN PLACE OF REVERSE CURVE

** a) SIGN SHALL BE PLACED 500' FROM REVERSE CURVE (OR STRAIGHT TAPER)

B) THERE SHALL BE 500' SPACING BETWEEN ROAD CONSTRUCTION AHEAD AND SIGNS

FILE NAME = c:\pw_work\pwidot\steedpa\c0159915\P144099-Design.dgn	USER NAME = steedpa	DESIGNED -	REVISED -	STATE OF ILLINOIS DEPARTMENT OF TRANSPORTATION	SUGGESTED STAGING AND TRAFFIC CONTROL PLAN - STAGE I 95th STREET @ 104th AVENUE / FLAVIN ROAD	F.A.U RTE.	SECTION	COUNTY	TOTAL SHEETS	SHEET NO.
		DRAWN -	REVISED -			1566	29 R-N-1	COOK	120	25
	PLOT SCALE = 50.0000 ' / in.	CHECKED -	REVISED -					CONTRACT NO. 62377		
	PLOT DATE = 12/6/2011	DATE -	REVISED -		SCALE: SHEET NO. OF SHEETS STA. TO STA.	ILLINOIS FED. AID PROJECT				

LEGEND

- PAVEMENT REMOVAL
- TEMPORARY PAVEMENT * *
- TRAFFIC LANE

1. TEMPORARY PAVEMENT MARKING DOUBLE YELLOW CENTERLINE, 4"
2. TEMPORARY PAVEMENT MARKING EDGE LINE, 4" WHITE
3. TEMPORARY CONCRETE BARRIER
4. VERTICAL PANELS OR DRUMS WITH STEADY BURNING LIGHT
5. EXISTING PAVEMENT
6. PROPOSED POLYMERIZED HOT-MIX ASPHALT SURFACE COURSE, STONE MATRIX ASPHALT, N80, 2"
7. PROPOSED POLYMERIZED HOT-MIX ASPHALT BINDER COURSE, STONE MATRIX ASPHALT, N80, 2"
8. PROPOSED POLYMERIZED HOT-MIX ASPHALT BINDER COURSE, IL-19, N90, 5¼"
9. PROPOSED AGGREGATE SUBGRADE, 12"
10. PROPOSED RETAINING WALL
11. PROPOSED HOT-MIX ASPHALT SHOULDER, 4'
12. PROPOSED HOT-MIX ASPHALT SHOULDER, 6'
13. PROPOSED HOT-MIX ASPHALT SHOULDER, 8'
14. PROPOSED STEEL PLATE BEAM GUARDRAIL
15. PROPOSED GRADING AND SHAPING DITCHES

STAGE II

NOTE:
* PROPOSED STEEL PLATE BEAM GUARDRAIL STA. 19+00 TO STA. 22+26
* * TEMPORARY PAVEMENT STA. 16+01 TO STA. 18+89

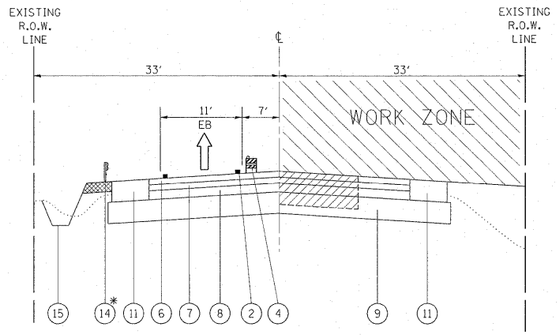

STAGE II TYPICAL SECTION (95TH ST.)
STA. 14+52 TO STA. 25+22.4

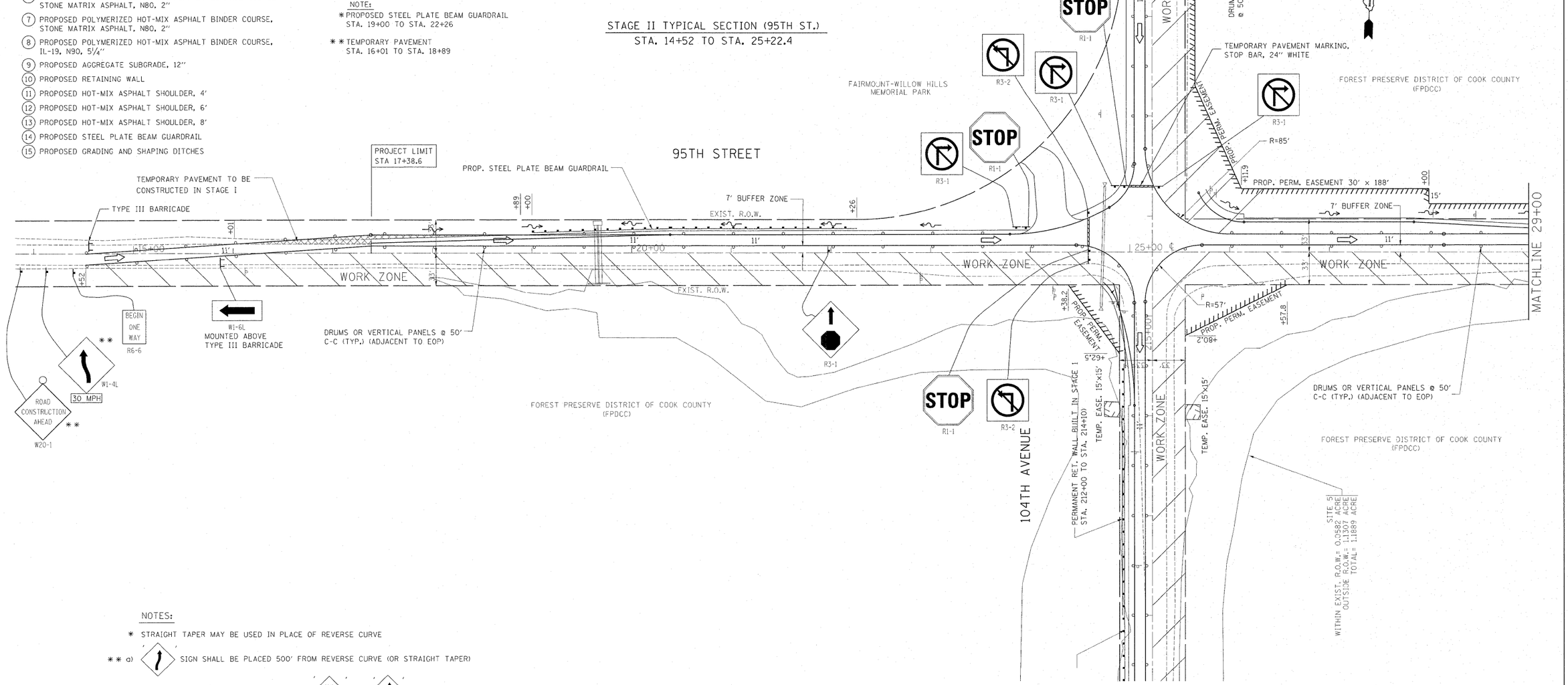

NOTES:

* STRAIGHT TAPER MAY BE USED IN PLACE OF REVERSE CURVE

* * a) SIGN SHALL BE PLACED 500' FROM REVERSE CURVE (OR STRAIGHT TAPER)

B) THERE SHALL BE 500' SPACING BETWEEN ROAD CONSTRUCTION AHEAD AND SIGNS

FILE NAME = c:\pw_work\pwidot\steedpa\d0159915\P144449-Design.dgn	USER NAME = steedpa	DESIGNED -	REVISED -
		DRAWN -	REVISED -
	PLOT SCALE = 50.0000 ' / in.	CHECKED -	REVISED -
	PLOT DATE = 12/6/2011	DATE -	REVISED -

STATE OF ILLINOIS
DEPARTMENT OF TRANSPORTATION

SUGGESTED STAGING AND TRAFFIC CONTROL PLAN - STAGE II
95th STREET @ 104th AVENUE / FLAVIN ROAD

SCALE: | SHEET NO. OF SHEETS | STA. TO STA.

F.A.U RTE.	SECTION	COUNTY	TOTAL SHEETS	SHEET NO.
1566	29 R-N-1	COOK	120	26

CONTRACT NO. 62377

ILLINOIS FED. AID PROJECT

LEGEND

- PAVEMENT REMOVAL
- TEMPORARY PAVEMENT *
- TRAFFIC LANE

1. TEMPORARY PAVEMENT MARKING DOUBLE YELLOW CENTERLINE, 4"
2. TEMPORARY PAVEMENT MARKING EDGE LINE, 4" WHITE
3. TEMPORARY CONCRETE BARRIER
4. VERTICAL PANELS OR DRUMS WITH STEADY BURNING LIGHT
5. EXISTING PAVEMENT
6. PROPOSED POLYMERIZED HOT-MIX ASPHALT SURFACE COURSE, STONE MATRIX ASPHALT, N80, 2"
7. PROPOSED POLYMERIZED HOT-MIX ASPHALT BINDER COURSE, STONE MATRIX ASPHALT, N80, 2"
8. PROPOSED POLYMERIZED HOT-MIX ASPHALT BINDER COURSE, IL-19, N90, 5¼"
9. PROPOSED AGGREGATE SUBGRADE, 12"
10. PROPOSED RETAINING WALL
11. PROPOSED HOT-MIX ASPHALT SHOULDER, 4'
12. PROPOSED HOT-MIX ASPHALT SHOULDER, 6'
13. PROPOSED HOT-MIX ASPHALT SHOULDER, 8'
14. PROPOSED STEEL PLATE BEAM GUARDRAIL
15. PROPOSED GRADING AND SHAPING DITCHES

STAGE II

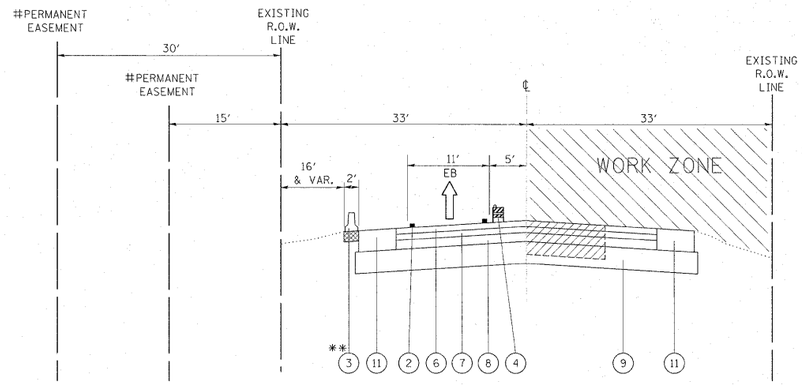

STAGE II TYPICAL SECTION (95TH ST.)
STA. 25+22.4 TO STA. 37+91

NOTE:
* TEMPORARY PAVEMENT STA. 33+05 TO STA. 35+62
* * TEMPORARY CONCRETE BARRIER STA. 33+10 TO STA. 35+62
PERMANENT EASEMENT (30' DISTANCE FROM R.O.W.) STA. 26+11 TO STA. 28+00
PERMANENT EASEMENT (15' DISTANCE FROM R.O.W.) STA. 28+00 TO STA. 32+00

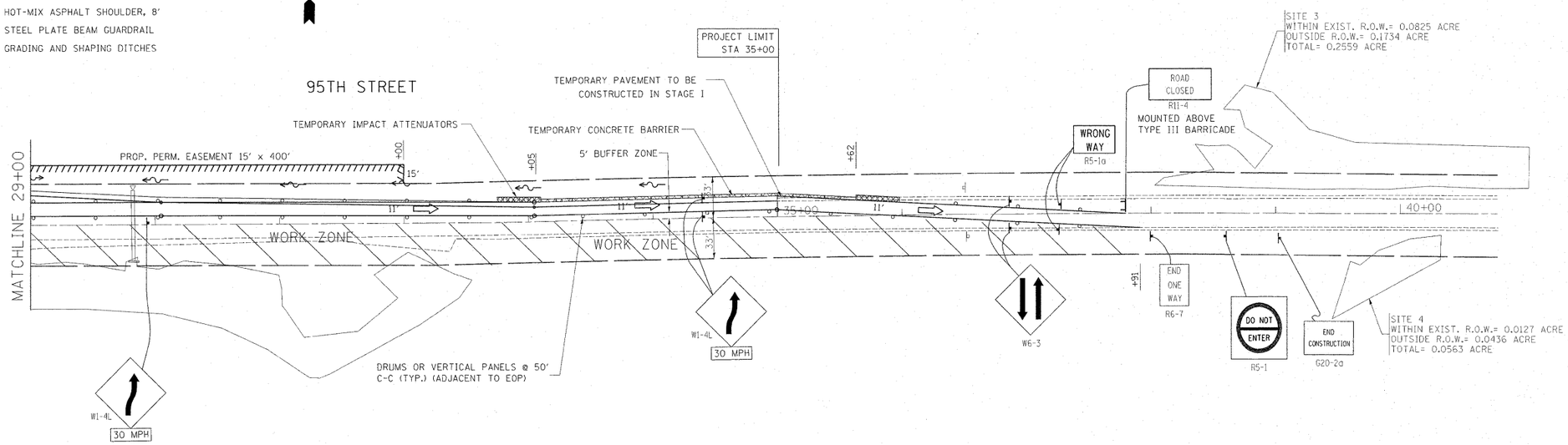

FILE NAME = c:\pw_work\pwidot\steedpa\d0159915\P144499-Design.dgn	USER NAME = steedpa	DESIGNED -	REVISED -
		DRAWN -	REVISED -
	PLOT SCALE = 50.0000 ' / in.	CHECKED -	REVISED -
	PLOT DATE = 12/6/2011	DATE -	REVISED -

STATE OF ILLINOIS
DEPARTMENT OF TRANSPORTATION

SUGGESTED STAGING AND TRAFFIC CONTROL PLAN - STAGE II
95th STREET @ 104th AVENUE / FLAVIN ROAD

SCALE: | SHEET NO. OF SHEETS | STA. TO STA.

F.A.U RTE.	SECTION	COUNTY	TOTAL SHEETS	SHEET NO.
1566	29 R-N-1	COOK	120	27

CONTRACT NO. 62377

ILLINOIS FED. AID PROJECT

LEGEND

- PAVEMENT REMOVAL
- TEMPORARY PAVEMENT
- TRAFFIC LANE
- (1) TEMPORARY PAVEMENT MARKING DOUBLE YELLOW CENTERLINE, 4"
- (2) TEMPORARY PAVEMENT MARKING EDGE LINE, 4" WHITE
- (3) TEMPORARY CONCRETE BARRIER
- (4) VERTICAL PANELS OR DRUMS WITH STEADY BURNING LIGHT
- (5) EXISTING PAVEMENT
- (6) PROPOSED POLYMERIZED HOT-MIX ASPHALT SURFACE COURSE, STONE MATRIX ASPHALT, N80, 2"
- (7) PROPOSED POLYMERIZED HOT-MIX ASPHALT BINDER COURSE, STONE MATRIX ASPHALT, N80, 2"
- (8) PROPOSED POLYMERIZED HOT-MIX ASPHALT BINDER COURSE, IL-19, N90, 5¼"
- (9) PROPOSED AGGREGATE SUBGRADE, 12"
- (10) PROPOSED RETAINING WALL
- (11) PROPOSED HOT-MIX ASPHALT SHOULDER, 4'
- (12) PROPOSED HOT-MIX ASPHALT SHOULDER, 6'
- (13) PROPOSED HOT-MIX ASPHALT SHOULDER, 8'
- (14) PROPOSED STEEL PLATE BEAM GUARDRAIL
- (15) PROPOSED GRADING AND SHAPING DITCHES

STAGE II

STAGE II TYPICAL SECTION (104TH AVE.)
STA. 203+49 TO STA. 215+64.3

NOTE:

* PROPOSED PERMANENT RETAINING WALL STA. 212+00 TO STA. 214+10 (WILL BE 7' FROM EXISTING R.O.W.)

TEMPORARY CONCRETE BARRIER STA. 207+00 TO STA. 208+00

** PROPOSED STEEL PLATE BEAM GUARDRAIL STA. 211+00 TO STA. 215+30

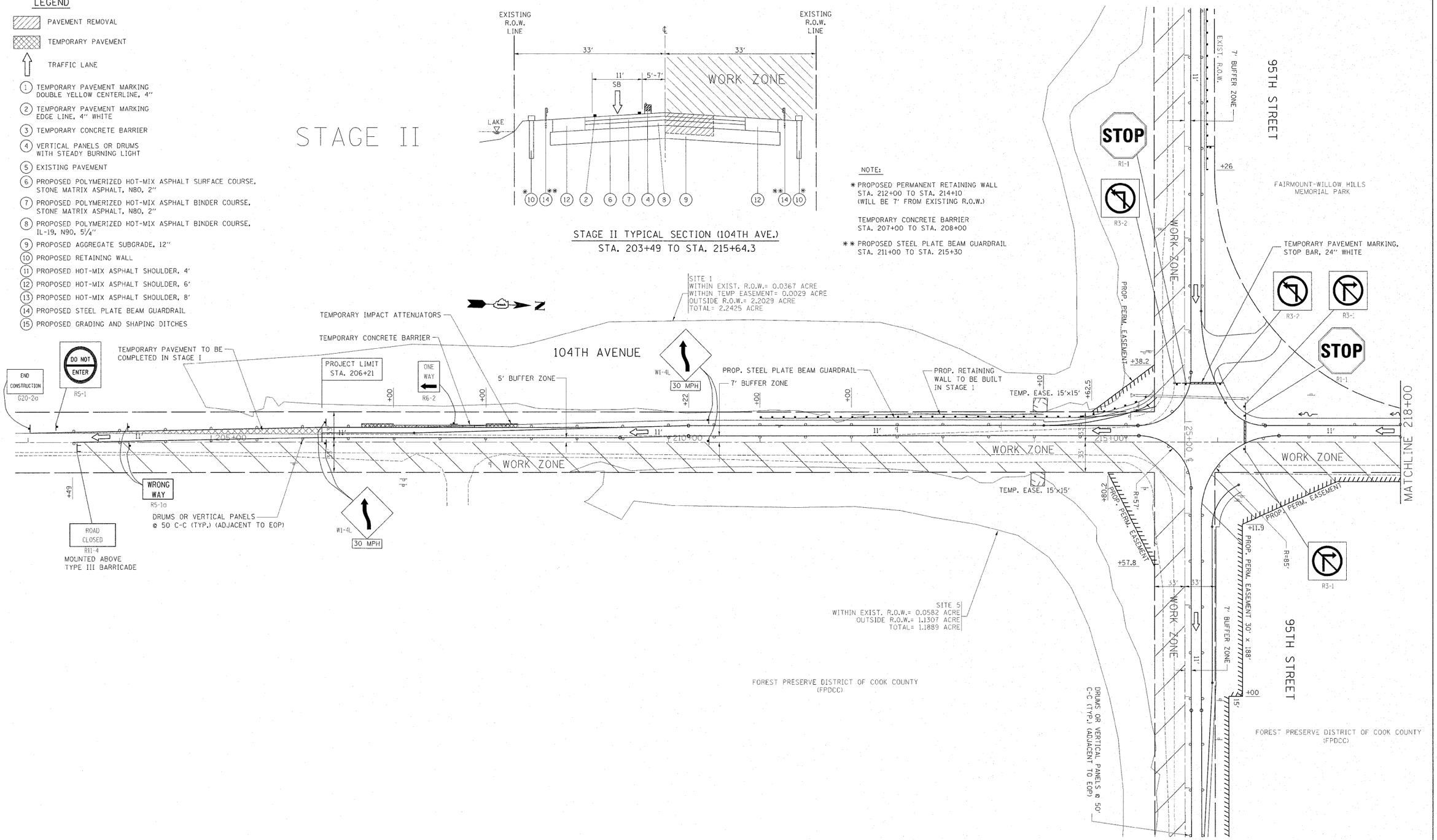

FILE NAME = c:\pw_work\pwidot\steedpa\d0159915\P144499-Design.dgn	USER NAME = steedpa	DESIGNED -	REVISED -	STATE OF ILLINOIS DEPARTMENT OF TRANSPORTATION	SUGGESTED STAGING AND TRAFFIC CONTROL PLAN - STAGE II 95th STREET @ 104th AVENUE / FLAVIN ROAD	F.A.U RTE.	SECTION	COUNTY	TOTAL SHEETS / SHEET NO.
		DRAWN -	REVISED -			1566	29 R-N-1	COOK	120 / 28
	PLOT SCALE = 50.0000 ' / in.	CHECKED -	REVISED -			CONTRACT NO. 62377			
	PLOT DATE = 12/6/2011	DATE -	REVISED -		SCALE: / SHEET NO. OF SHEETS / STA. TO STA.	ILLINOIS	FED. AID PROJECT		

LEGEND

- PAVEMENT REMOVAL
- TEMPORARY PAVEMENT *
- TRAFFIC LANE

1. TEMPORARY PAVEMENT MARKING DOUBLE YELLOW CENTERLINE, 4"
2. TEMPORARY PAVEMENT MARKING EDGE LINE, 4" WHITE
3. TEMPORARY CONCRETE BARRIER
4. VERTICAL PANELS OR DRUMS WITH STEADY BURNING LIGHT
5. EXISTING PAVEMENT
6. PROPOSED POLYMERIZED HOT-MIX ASPHALT SURFACE COURSE, STONE MATRIX ASPHALT, N80, 2"
7. PROPOSED POLYMERIZED HOT-MIX ASPHALT BINDER COURSE, STONE MATRIX ASPHALT, N80, 2"
8. PROPOSED POLYMERIZED HOT-MIX ASPHALT BINDER COURSE, IL-19, N90, 5¼"
9. PROPOSED AGGREGATE SUBGRADE, 12"
10. PROPOSED RETAINING WALL
11. PROPOSED HOT-MIX ASPHALT SHOULDER, 4'
12. PROPOSED HOT-MIX ASPHALT SHOULDER, 6'
13. PROPOSED HOT-MIX ASPHALT SHOULDER, 8'
14. PROPOSED STEEL PLATE BEAM GUARDRAIL
15. PROPOSED GRADING AND SHAPING DITCHES

STAGE II

NOTE:

* TEMPORARY PAVEMENT STA. 222+94 TO STA. 227+54

** TEMPORARY CONCRETE BARRIER STA. 222+94 TO STA. 225+09

\# PROP. PERMANENT EASEMENT STA. 217+31 TO 224+00

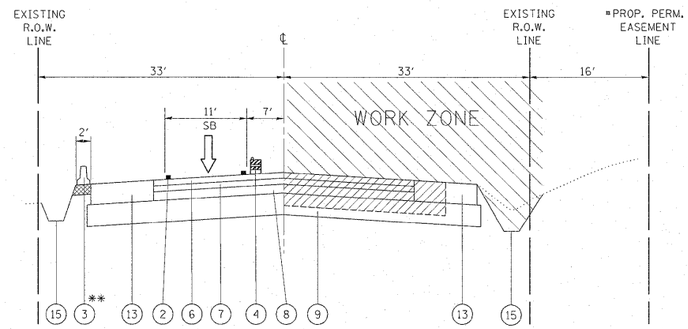

STAGE II TYPICAL SECTION (FLAVIN RD.)
STA. 215+64.3 TO STA. 227+54

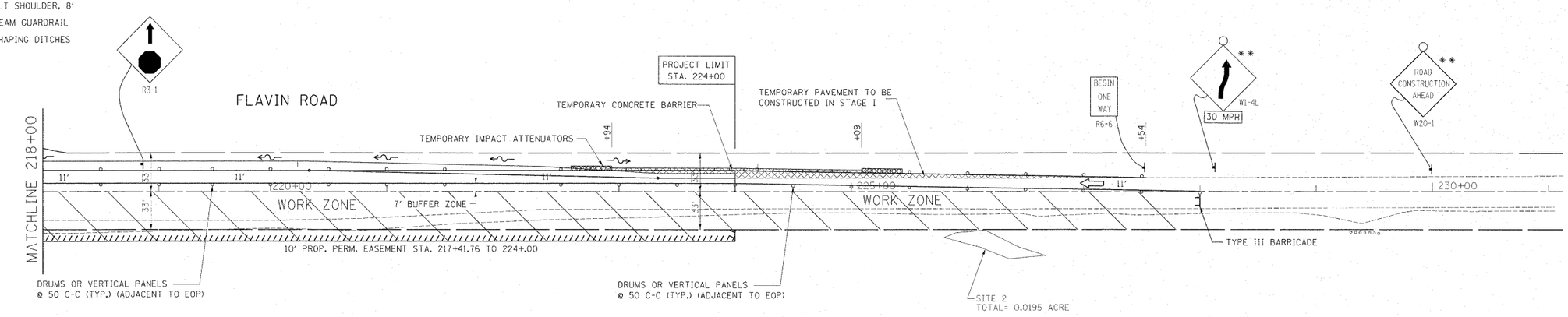

NOTES:

* STRAIGHT TAPER MAY BE USED IN PLACE OF REVERSE CURVE

** a) SIGN SHALL BE PLACED 500' FROM REVERSE CURVE (OR STRAIGHT TAPER)

B) THERE SHALL BE 500' SPACING BETWEEN ROAD CONSTRUCTION AHEAD AND SIGNS

FILE NAME = c:\pw_work\pwidot\steedpa\d215991\P144499-Design.dgn	USER NAME = steedpa	DESIGNED -	REVISED -	STATE OF ILLINOIS DEPARTMENT OF TRANSPORTATION	SUGGESTED STAGING AND TRAFFIC CONTROL PLAN - STAGE II 95th STREET @ 104th AVENUE / FLAVIN ROAD	F.A.U RTE.	SECTION	COUNTY	TOTAL SHEETS	SHEET NO.
		DRAWN -	REVISED -			1566	29 R-N-1	COOK	120	29
	PLOT SCALE = 50.0000 ' / in.	CHECKED -	REVISED -					CONTRACT NO. 62377		
	PLOT DATE = 12/6/2011	DATE -	REVISED -		SCALE: SHEET NO. OF SHEETS STA. TO STA.		ILLINOIS	FED. AID PROJECT		

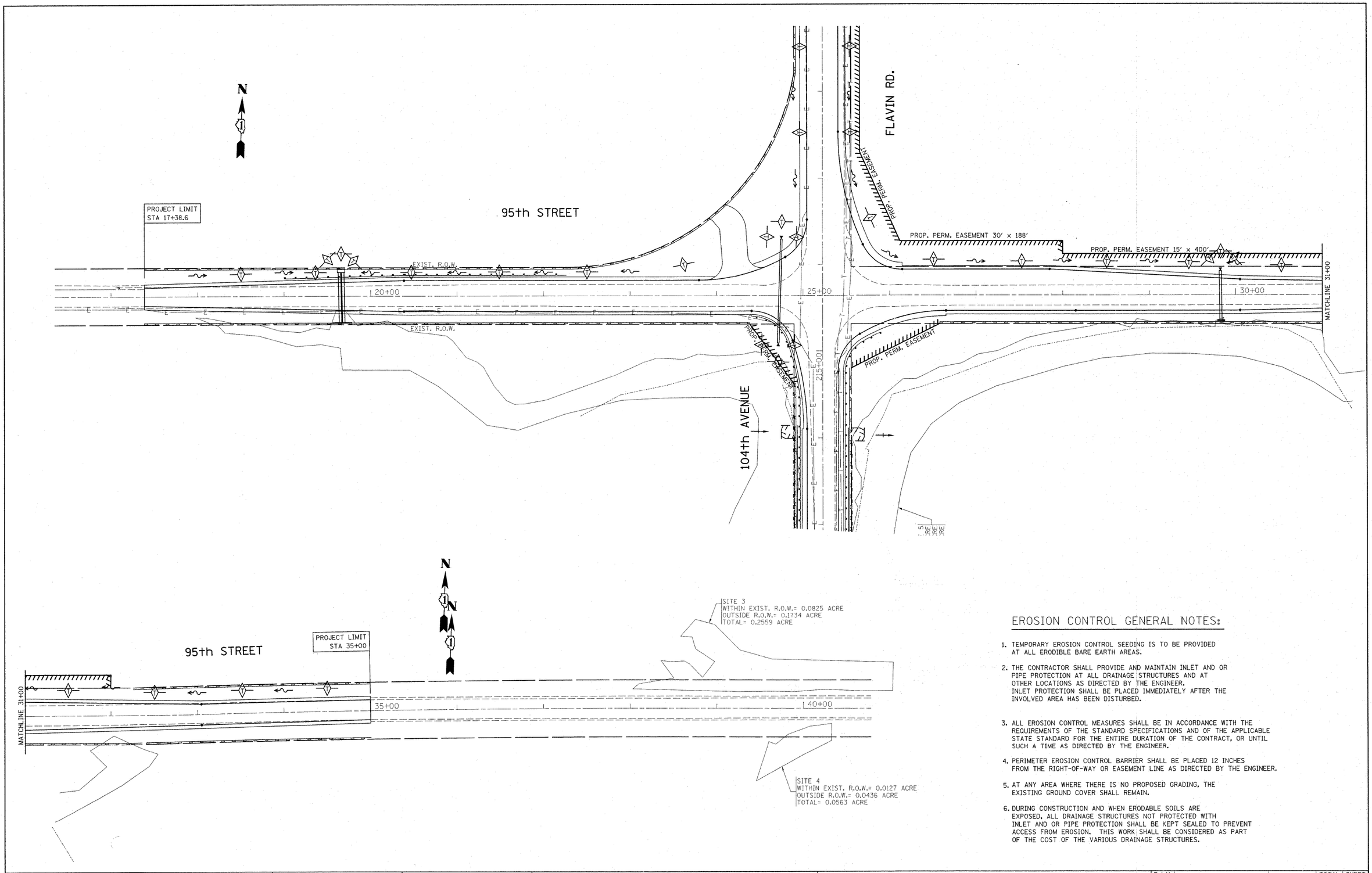

EROSION CONTROL GENERAL NOTES:

1. TEMPORARY EROSION CONTROL SEEDING IS TO BE PROVIDED AT ALL ERODIBLE BARE EARTH AREAS.
2. THE CONTRACTOR SHALL PROVIDE AND MAINTAIN INLET AND OR PIPE PROTECTION AT ALL DRAINAGE STRUCTURES AND AT OTHER LOCATIONS AS DIRECTED BY THE ENGINEER. INLET PROTECTION SHALL BE PLACED IMMEDIATELY AFTER THE INVOLVED AREA HAS BEEN DISTURBED.
3. ALL EROSION CONTROL MEASURES SHALL BE IN ACCORDANCE WITH THE REQUIREMENTS OF THE STANDARD SPECIFICATIONS AND OF THE APPLICABLE STATE STANDARD FOR THE ENTIRE DURATION OF THE CONTRACT, OR UNTIL SUCH A TIME AS DIRECTED BY THE ENGINEER.
4. PERIMETER EROSION CONTROL BARRIER SHALL BE PLACED 12 INCHES FROM THE RIGHT-OF-WAY OR EASEMENT LINE AS DIRECTED BY THE ENGINEER.
5. AT ANY AREA WHERE THERE IS NO PROPOSED GRADING, THE EXISTING GROUND COVER SHALL REMAIN.
6. DURING CONSTRUCTION AND WHEN ERODABLE SOILS ARE EXPOSED, ALL DRAINAGE STRUCTURES NOT PROTECTED WITH INLET AND OR PIPE PROTECTION SHALL BE KEPT SEALED TO PREVENT ACCESS FROM EROSION. THIS WORK SHALL BE CONSIDERED AS PART OF THE COST OF THE VARIOUS DRAINAGE STRUCTURES.

FILE NAME = c:\pw_work\pwidot\ulrichkd\d0159937\P144299-sht-eros.dgn	USER NAME = ulrichkd	DESIGNED -	REVISED -	STATE OF ILLINOIS DEPARTMENT OF TRANSPORTATION	95TH STREET @ 104TH AVE. /FLAVIN RD. EROSION CONTROL PLAN	F.A.U RTE.	SECTION	COUNTY	TOTAL SHEETS	SHEET NO.
		DRAWN -	REVISED -			1566	29 R-N-1	COOOK	120	30
	PLOT SCALE = 50.000 ' / IN.	CHECKED -	REVISED -					CONTRACT NO. 62377		
	PLOT DATE = 3/23/2011	DATE -	REVISED -		SCALE: SHEET NO. OF SHEETS STA. TO STA.		ILLINOIS	FED. AID PROJECT		

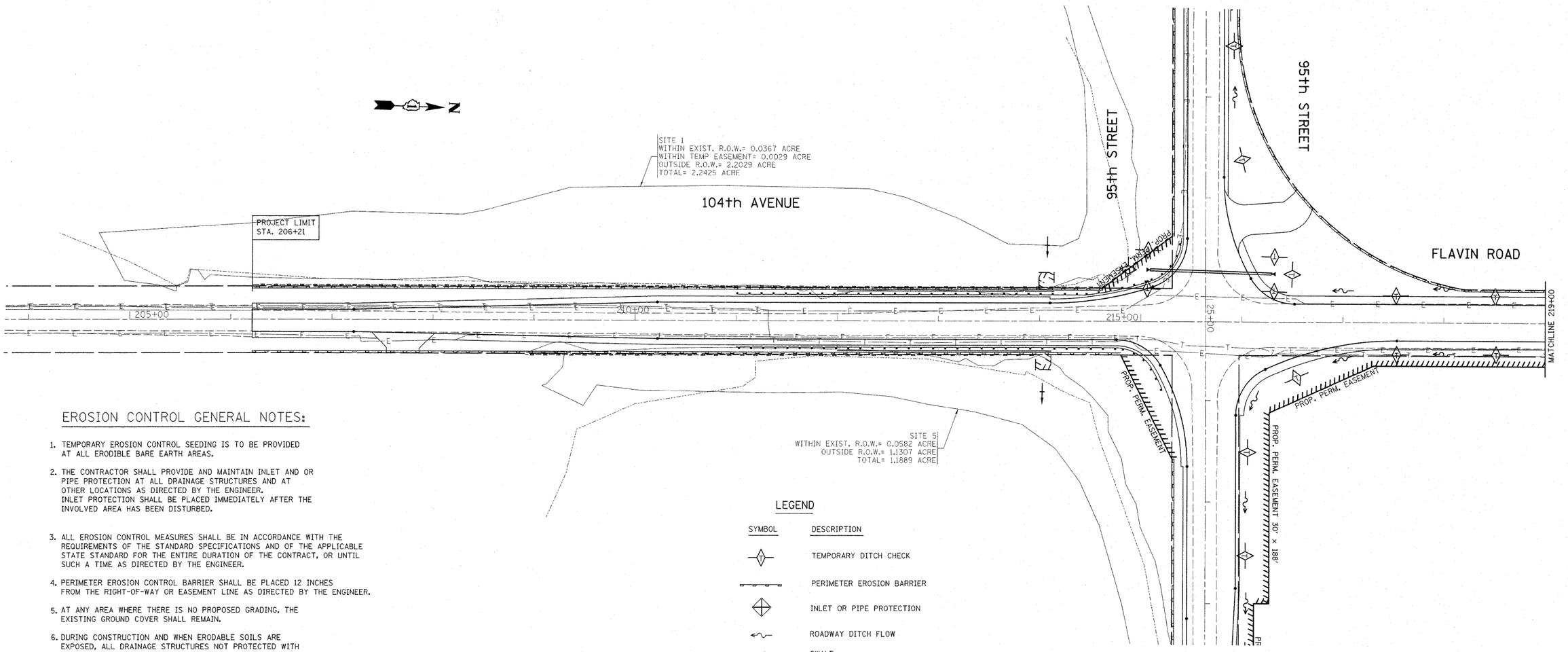

EROSION CONTROL GENERAL NOTES:

1. TEMPORARY EROSION CONTROL SEEDING IS TO BE PROVIDED AT ALL ERODIBLE BARE EARTH AREAS.
2. THE CONTRACTOR SHALL PROVIDE AND MAINTAIN INLET AND OR PIPE PROTECTION AT ALL DRAINAGE STRUCTURES AND AT OTHER LOCATIONS AS DIRECTED BY THE ENGINEER. INLET PROTECTION SHALL BE PLACED IMMEDIATELY AFTER THE INVOLVED AREA HAS BEEN DISTURBED.
3. ALL EROSION CONTROL MEASURES SHALL BE IN ACCORDANCE WITH THE REQUIREMENTS OF THE STANDARD SPECIFICATIONS AND OF THE APPLICABLE STATE STANDARD FOR THE ENTIRE DURATION OF THE CONTRACT, OR UNTIL SUCH A TIME AS DIRECTED BY THE ENGINEER.
4. PERIMETER EROSION CONTROL BARRIER SHALL BE PLACED 12 INCHES FROM THE RIGHT-OF-WAY OR EASEMENT LINE AS DIRECTED BY THE ENGINEER.
5. AT ANY AREA WHERE THERE IS NO PROPOSED GRADING, THE EXISTING GROUND COVER SHALL REMAIN.
6. DURING CONSTRUCTION AND WHEN ERODABLE SOILS ARE EXPOSED, ALL DRAINAGE STRUCTURES NOT PROTECTED WITH INLET AND OR PIPE PROTECTION SHALL BE KEPT SEALED TO PREVENT ACCESS FROM EROSION. THIS WORK SHALL BE CONSIDERED AS PART OF THE COST OF THE VARIOUS DRAINAGE STRUCTURES.

LEGEND

SYMBOL	DESCRIPTION
	TEMPORARY DITCH CHECK
	PERIMETER EROSION BARRIER
	INLET OR PIPE PROTECTION
	ROADWAY DITCH FLOW
	SWALE

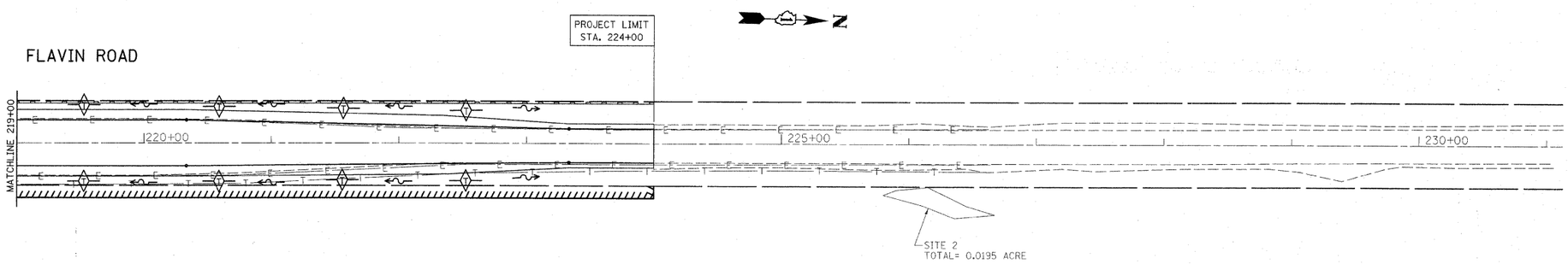

FILE NAME = c:\pw_work\pwidot\ulrichkd\d0159937\P144199-sht-eros.dgn	USER NAME = ulrichkd	DESIGNED -	REVISED -	STATE OF ILLINOIS DEPARTMENT OF TRANSPORTATION	104TH AVENUE @ 95TH STREET EROSION CONTROL PLAN	F.A.U RTE.	SECTION	COUNTY	TOTAL SHEETS / SHEET NO.
		DRAWN -	REVISED -			1566	29 R-N-1	COOK	120 / 31
	PLOT SCALE = 50.000 ' / IN.	CHECKED -	REVISED -					CONTRACT NO. 62377	
	PLOT DATE = 3/23/2011	DATE -	REVISED -		SCALE: SHEET NO. OF SHEETS STA. TO STA.			ILLINOIS FED. AID PROJECT	

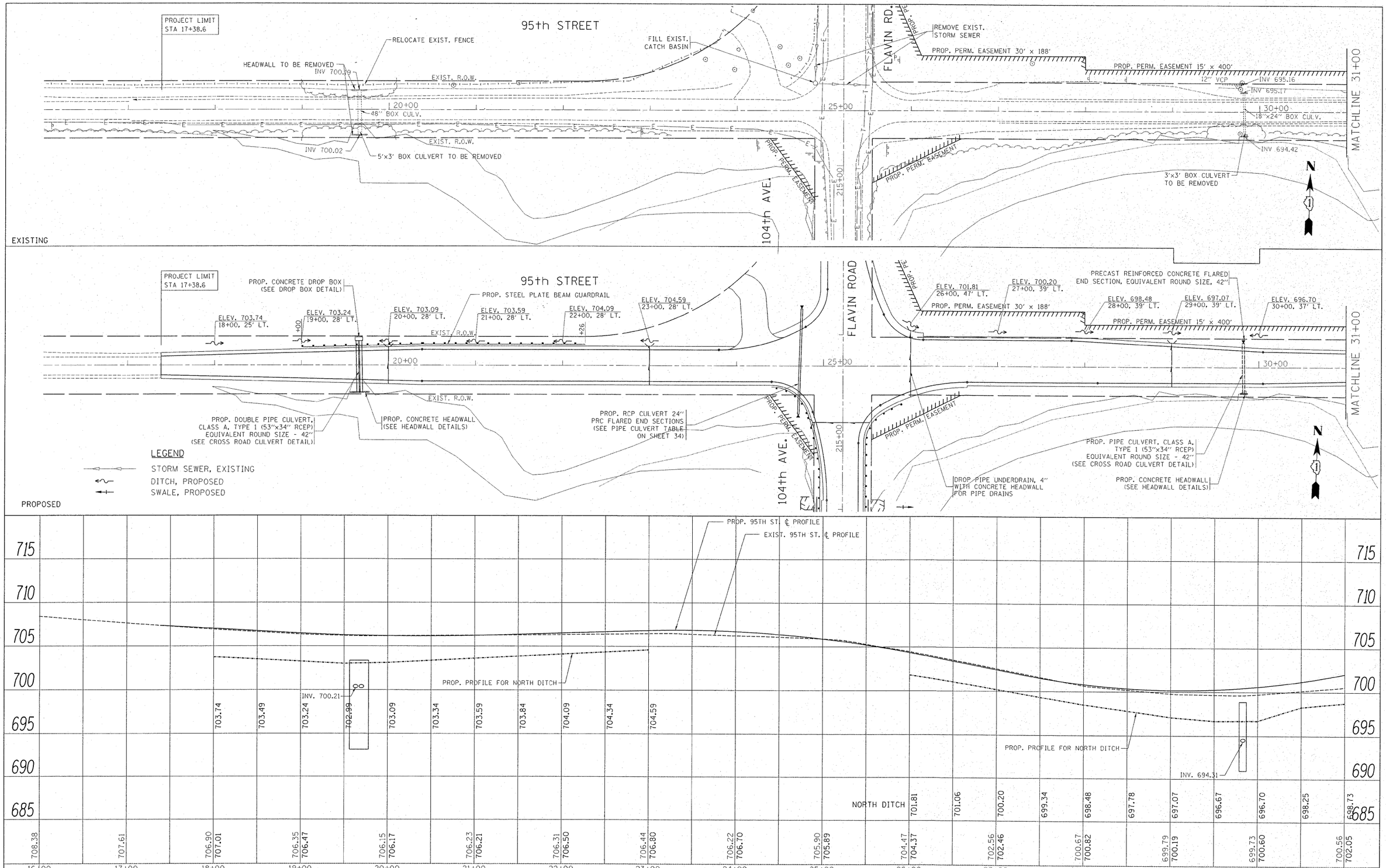

FILE NAME = c:\pw_work\pwidot\steedpa\d0159937\P144499-sht-drain.dgn	USER NAME = steedpa	DESIGNED -	REVISED -
		DRAWN -	REVISED -
	PLOT SCALE = 50.000 ' / in.	CHECKED -	REVISED -
	PLOT DATE = 12/22/2011	DATE -	REVISED -

STATE OF ILLINOIS
DEPARTMENT OF TRANSPORTATION

95th STREET @ 104th AVE. / FLAVIN ROAD
EXIST. & PROP. DRAINAGE PLAN

SCALE: | SHEET NO. OF SHEETS | STA. TO STA.

F.A.U RTE.	SECTION	COUNTY	TOTAL SHEETS	SHEET NO.
1566	29R-N-1	COOK	120	32

CONTRACT NO. 62377

ILLINOIS FED. AID PROJECT

PLAN: SURVEYED / PLOTTED / ALIGNMENT CHECKED / RT. OF WAY CHECKED / CADD FILE NAME / NOTE BOOK NO. / BY / DATE

PROFILE: SURVEYED / PLOTTED / GRADES CHECKED / B.M. NOTED / STRUCTURE NOTAT'NS CH'KD / NOTE BOOK NO. / BY / DATE

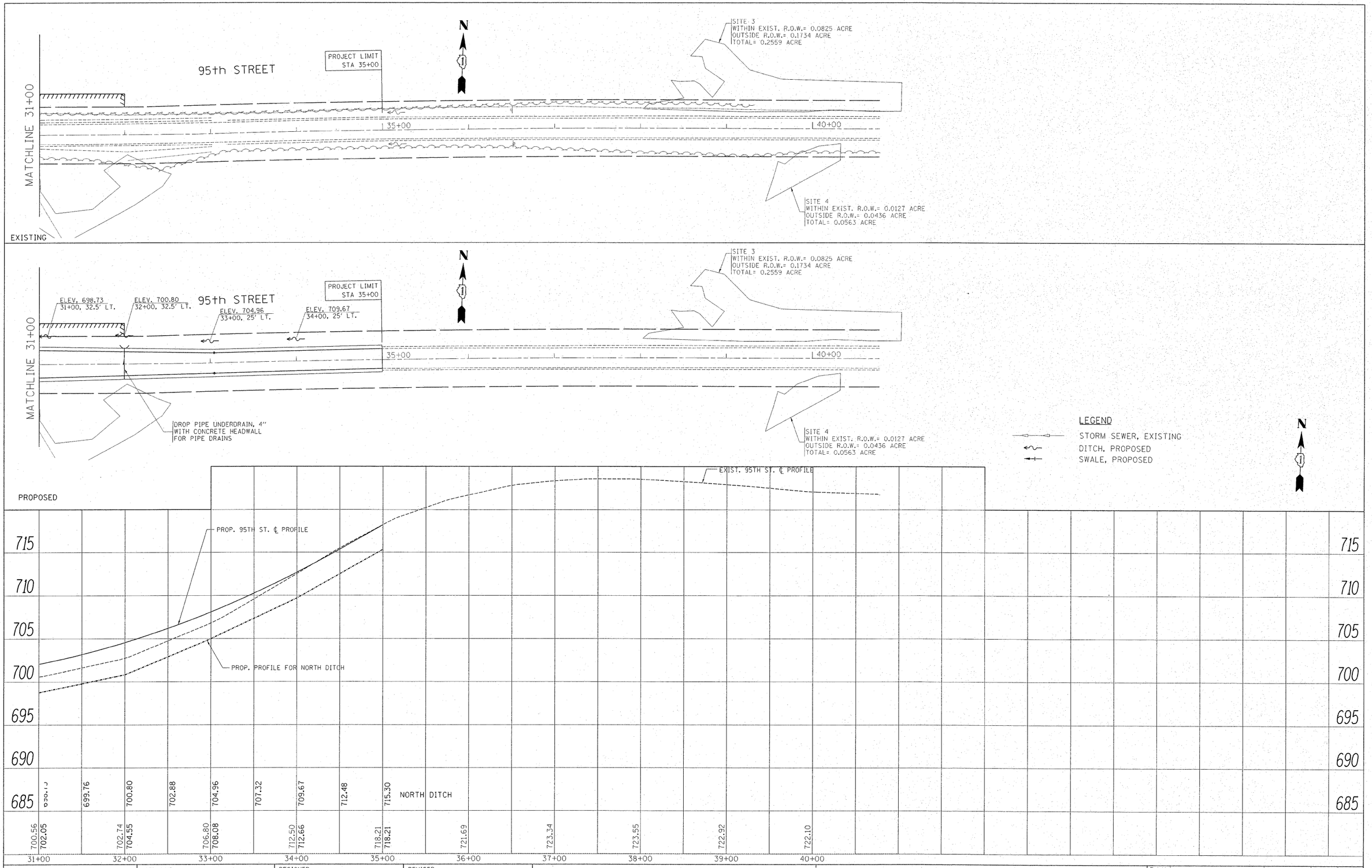

PLAN — SURVEYED / PLOTTED / ALIGNMENT CHECKED / RT. OF WAY CHECKED / CADD FILE NAME — NOTE BOOK NO. — BY — DATE

PROFILE — SURVEYED / PLOTTED / GRADES CHECKED / B.M. NOTED / STRUCTURE NOTATNS CHKD — NOTE BOOK NO. — BY — DATE

FILE NAME = c:\pw_work\pwidot\steedpa\d0159937\P144499-sht-drain.dgn	USER NAME = steedpa	DESIGNED -	REVISED -
		DRAWN -	REVISED -
	PLOT SCALE = 50.000 ' / in.	CHECKED -	REVISED -
	PLOT DATE = 12/22/2011	DATE -	REVISED -

STATE OF ILLINOIS
DEPARTMENT OF TRANSPORTATION

95th STREET @ 104th AVE. / FLAVIN ROAD
EXIST. & PROP. DRAINAGE PLAN

SCALE: | SHEET NO. OF SHEETS | STA. TO STA.

F.A.U RTE.	SECTION	COUNTY	TOTAL SHEETS	SHEET NO.
1566	29R-N-1	COOK	120	33

CONTRACT NO. 62377

ILLINOIS FED. AID PROJECT

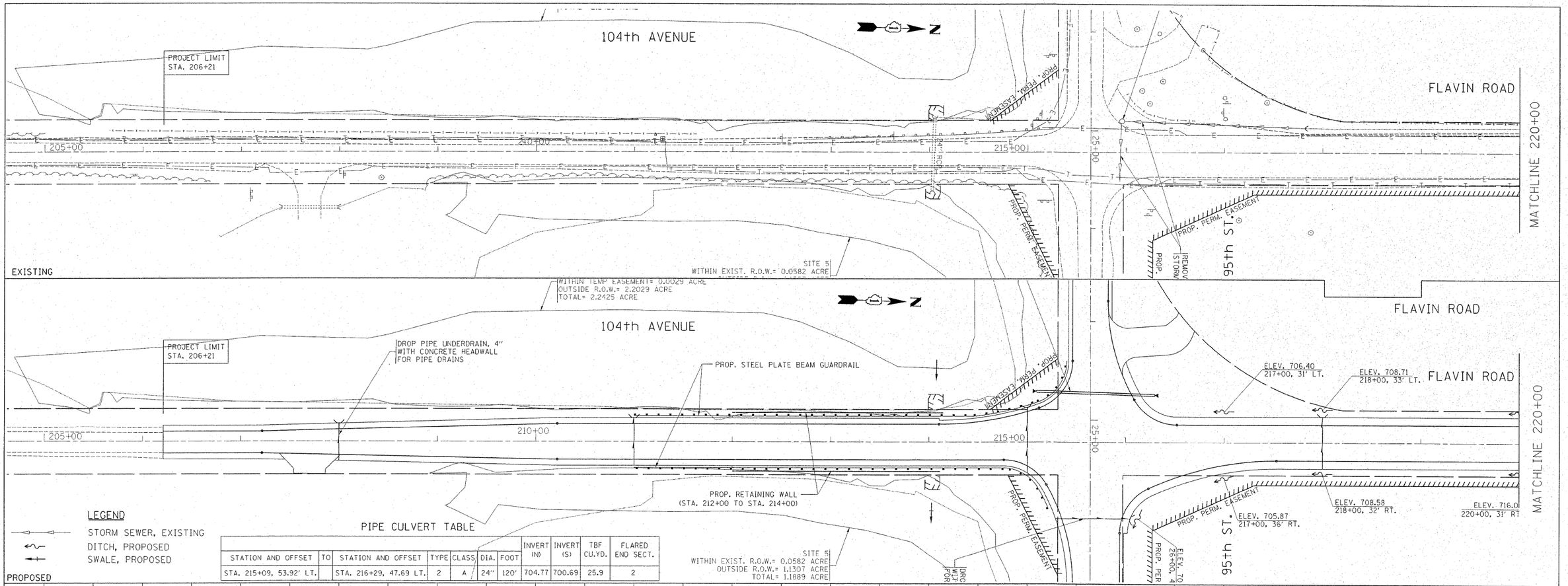

LEGEND

STORM SEWER, EXISTING
DITCH, PROPOSED
SWALE, PROPOSED

PIPE CULVERT TABLE

STATION AND OFFSET	TO	STATION AND OFFSET	TYPE	CLASS	DIA.	FOOT	INVERT (N)	INVERT (S)	TBF CU.YD.	FLARED END SECT.
STA. 215+09, 53.92' LT.		STA. 216+29, 47.69 LT.	2	A	24"	120'	704.77	700.69	25.9	2

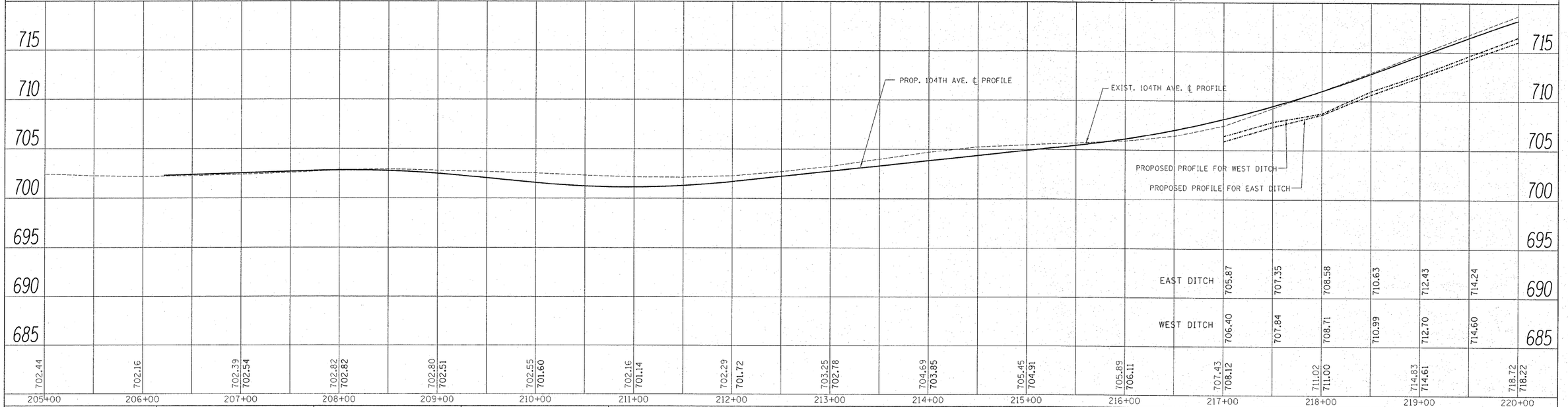

PLAN — NOTE BOOK NO. — SURVEYED — PLOTTED — ALIGNMENT CHECKED — RT. OF WAY CHECKED — CADD FILE NAME — BY — DATE

PROFILE — NOTE BOOK NO. — SURVEYED — PLOTTED — GRADES CHECKED — B.M. NOTED — STRUCTURE NOTATNS CHKD — BY — DATE

FILE NAME = c:\pw_work\pwidot\steedpa\d0159937\P144499-sht-drain.dgn	USER NAME = steedpa	DESIGNED -	REVISED -
		DRAWN -	REVISED -
	PLOT SCALE = 50.000 ' / in.	CHECKED -	REVISED -
	PLOT DATE = 12/22/2011	DATE -	REVISED -

STATE OF ILLINOIS
DEPARTMENT OF TRANSPORTATION

104th AVE. / FLAVIN ROAD @ 95th STREET
EXIST. & PROP. DRAINAGE PLAN

SCALE: | SHEET NO. OF SHEETS | STA. TO STA.

F.A.U RTE.	SECTION	COUNTY	TOTAL SHEETS	SHEET NO.
1566	29R-N-1	COOK	120	34

CONTRACT NO. 62377

ILLINOIS FED. AID PROJECT

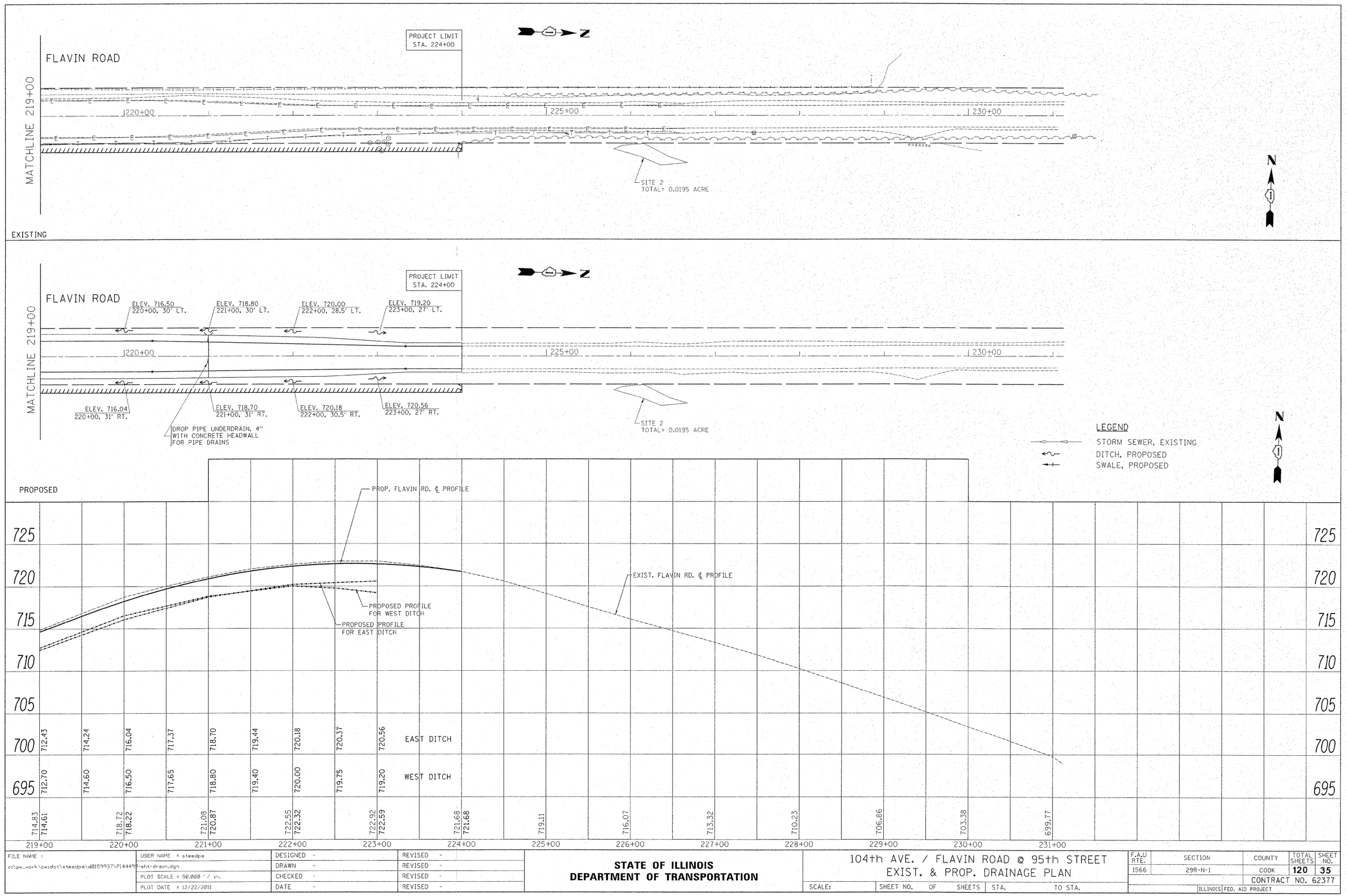

PLAN — NOTE BOOK NO. — SURVEYED / PLOTTED / ALIGNMENT CHECKED / RT. OF WAY CHECKED / CADD FILE NAME — BY — DATE

PROFILE — NOTE BOOK NO. — SURVEYED / PLOTTED / GRADES CHECKED / B.M. NOTED / STRUCTURE NOTAT'NS CH'KD — BY — DATE

FILE NAME = c:\pw_work\pwidot\steedpa\d0159937\P144499-sht-drain.dgn	USER NAME = steedpa	DESIGNED -	REVISED -
		DRAWN -	REVISED -
	PLOT SCALE = 50.000 ' / in.	CHECKED -	REVISED -
	PLOT DATE = 12/22/2011	DATE -	REVISED -

STATE OF ILLINOIS
DEPARTMENT OF TRANSPORTATION

104th AVE. / FLAVIN ROAD @ 95th STREET
EXIST. & PROP. DRAINAGE PLAN

SCALE: | SHEET NO. OF SHEETS | STA. TO STA.

F.A.U RTE.	SECTION	COUNTY	TOTAL SHEETS	SHEET NO.
1566	29R-N-1	COOK	120	35

CONTRACT NO. 62377

ILLINOIS FED. AID PROJECT

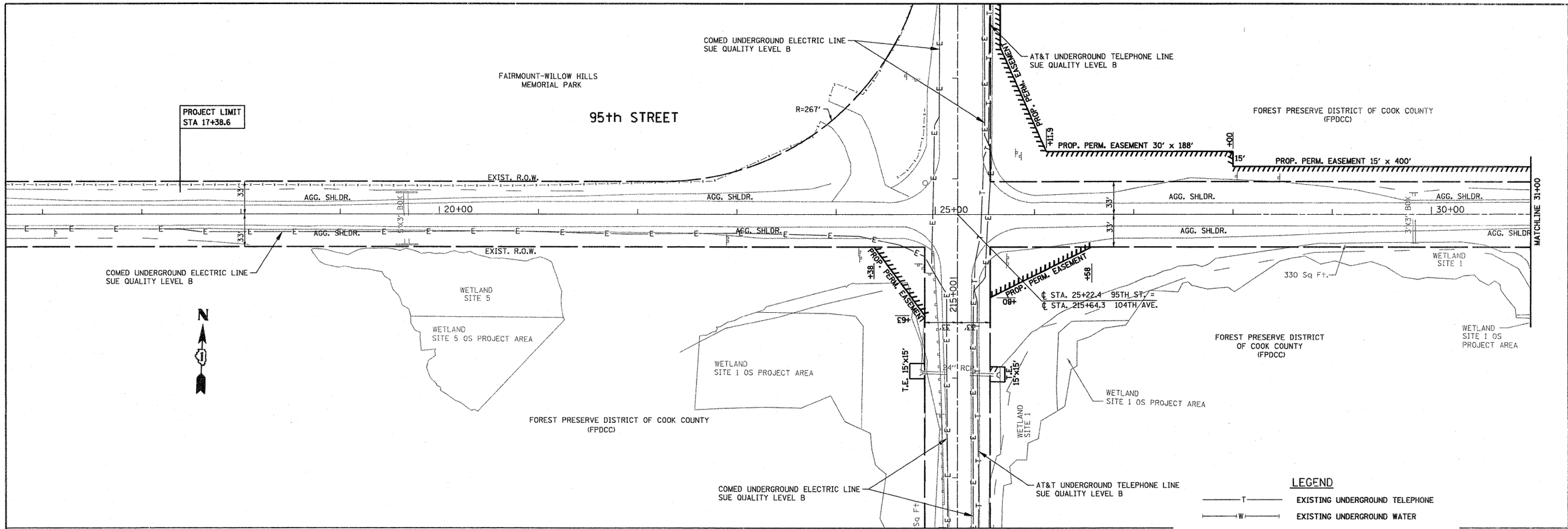

NOTES:

1. HORIZONTAL CONTROL, VERTICAL CONTROL, CENTERLINE ALIGNMENT, AND TOPOGRAPHIC FEATURES WERE SUPPLIED BY ILLINOIS DEPARTMENT OF TRANSPORTATION.

LEGEND

—T—	EXISTING UNDERGROUND TELEPHONE
—W—	EXISTING UNDERGROUND WATER
—E—	EXISTING UNDERGROUND ELECTRIC
—G—	EXISTING UNDERGROUND GAS
—CTV—	EXISTING UNDERGROUND CABLE TV

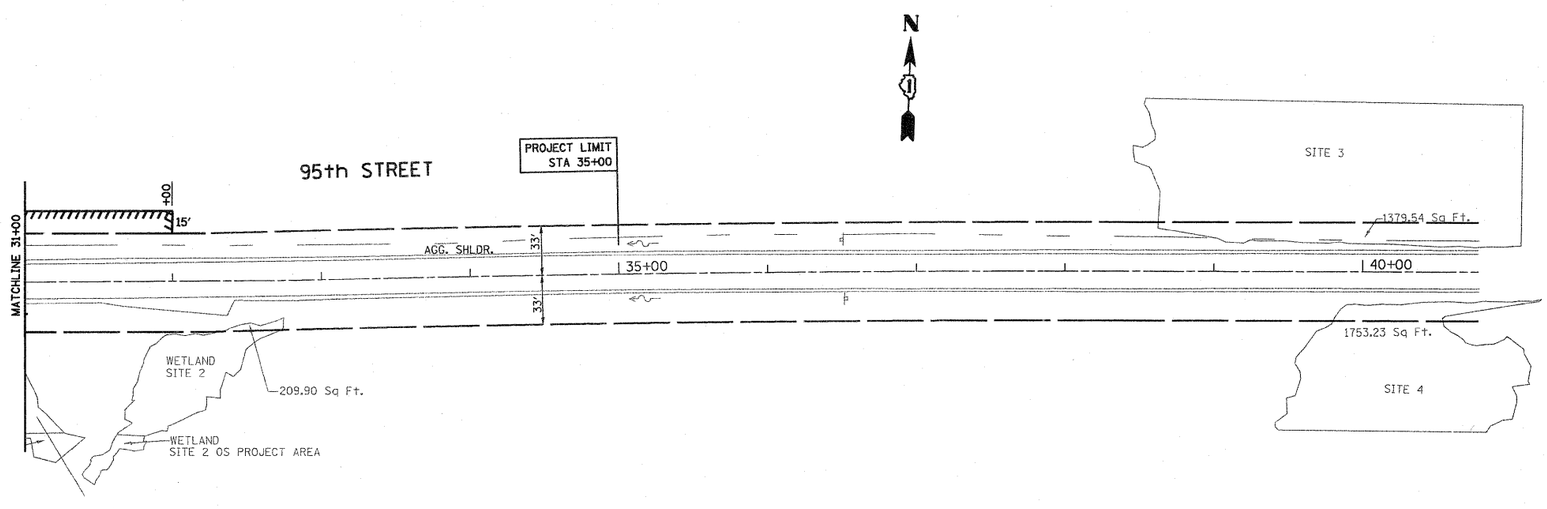

STATE OF ILLINOIS)
) S.S.
COUNTY OF COOK)

UTILITY(IES) SHOWN HEREON HAVE BEEN INVESTIGATED BY ASE IN ACCORDANCE WITH SUE INDUSTRY STANDARDS QUALITY B (QLB). ALL OTHER INFORMATION SHOWN HAS BEEN PROVIDED BY OTHERS.

FIELD WORK WAS PERFORMED BETWEEN THE 16TH OF APRIL AND 22ND DAY OF APRIL, A.D., 2010.

IN WITNESS WHEREOF, I HAVE HEREUNTO SET MY HAND AND SEAL THIS 23RD DAY OF APRIL A.D., 2010. CHICAGO, IL.

Steven M. Rienks

STEVEN M. RIENKS - ILLINOIS PROFESSIONAL ENGINEER NUMBER 62-044619
MY LICENSE EXPIRES 11/30/2011

STEVEN M. RIENKS
062-044619
LICENSED PROFESSIONAL ENGINEER OF
ILLINOIS

AMERICAN
SURVEYING & ENGINEERING, P.C.
SURVEYORS · ENGINEERS
GEODESISTS MAPPING SCIENTISTS
Chicago: 312-277-2000 / Fax 312-277-2002
Dixon: 815-288-6231 / Fax 815-288-6277
Aurora: 603-897-4105 / Fax 630-897-4121
Illinois Professional Design Firm No. 184-003192

FILE NAME = P144499-sht-drain.dgn	USER NAME = $USER$	DESIGNED -	REVISED -
		DRAWN -	REVISED -
	PLOT SCALE = 50.000 ' / IN.	CHECKED -	REVISED -
	PLOT DATE = 4/23/2010	DATE -	REVISED -

STATE OF ILLINOIS
DEPARTMENT OF TRANSPORTATION

95th STREET @
104th AVENUE / FLAVIN ROAD
SUE STUDY PLAN

SCALE: 1"=50' | SHEET NO. OF SHEETS | STA. 16+00 TO STA. 40+00

F.A.U. RTE.	SECTION	COUNTY	TOTAL SHEETS	SHEET NO.
1566	29 R-N-1	COOK	120	36

CONTRACT NO. 62377

ILLINOIS FED. AID PROJECT

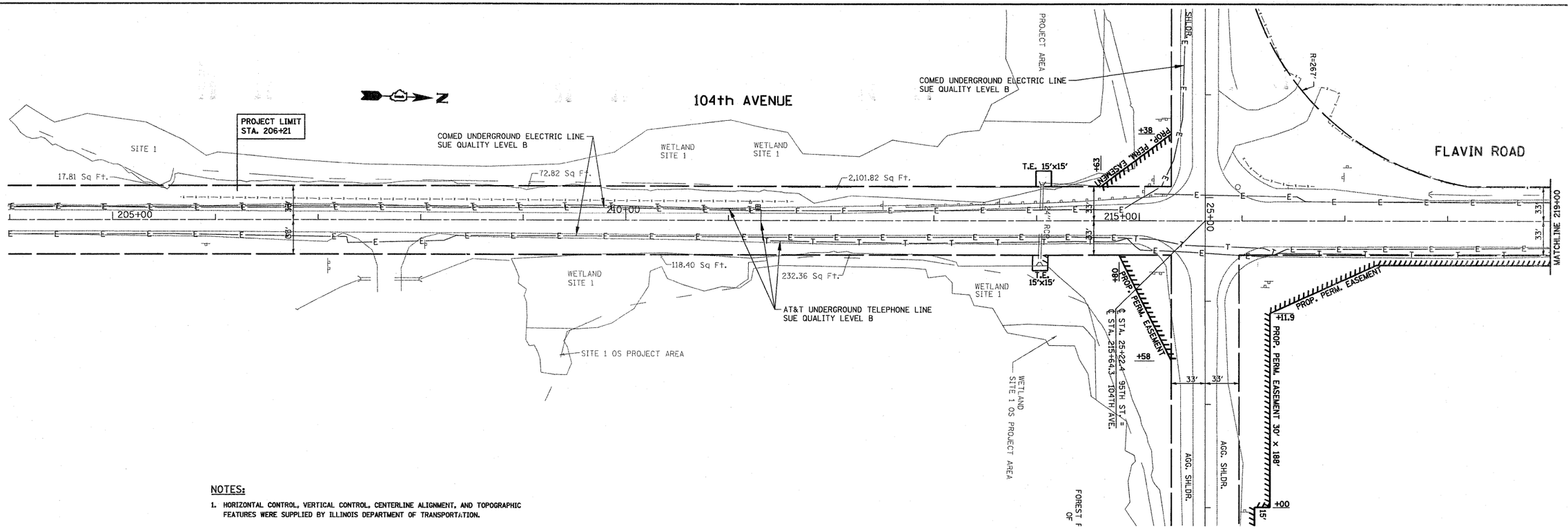

NOTES:

1. HORIZONTAL CONTROL, VERTICAL CONTROL, CENTERLINE ALIGNMENT, AND TOPOGRAPHIC FEATURES WERE SUPPLIED BY ILLINOIS DEPARTMENT OF TRANSPORTATION.

LEGEND

—T—	EXISTING UNDERGROUND TELEPHONE
—W—	EXISTING UNDERGROUND WATER
—E—	EXISTING UNDERGROUND ELECTRIC
—G—	EXISTING UNDERGROUND GAS
—CTV—	EXISTING UNDERGROUND CABLE TV

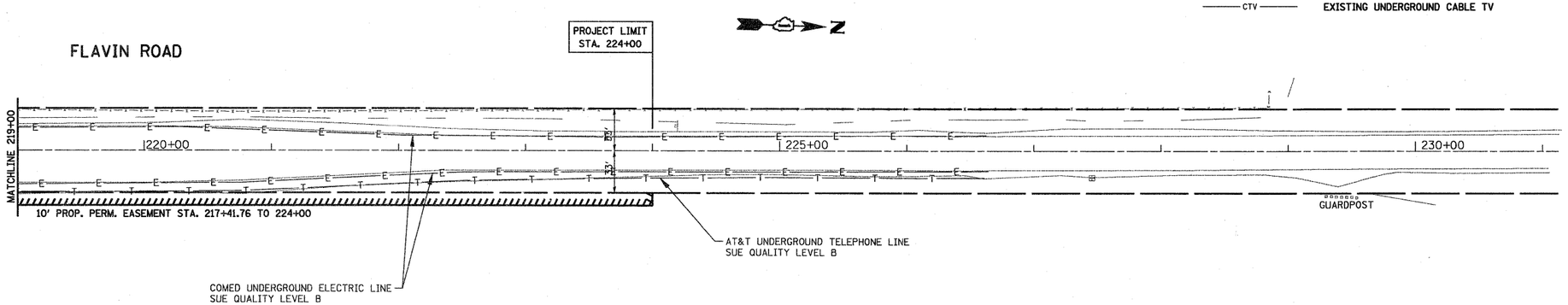

STATE OF ILLINOIS)
) S.S.
COUNTY OF COOK)

UTILITY(IES) SHOWN HEREON HAVE BEEN INVESTIGATED BY ASE IN ACCORDANCE WITH SUE INDUSTRY STANDARDS QUALITY B (QLB). ALL OTHER INFORMATION SHOWN HAS BEEN PROVIDED BY OTHERS.

FIELD WORK WAS PERFORMED BETWEEN THE 16TH OF APRIL AND 22ND DAY OF APRIL, A.D., 2010.

IN WITNESS WHEREOF, I HAVE HEREUNTO SET MY HAND AND SEAL THIS 23RD DAY OF APRIL A.D., 2010. CHICAGO, IL.

Steven M. Rienks

STEVEN M. RIENKS - ILLINOIS PROFESSIONAL ENGINEER NUMBER 62-044619
MY LICENSE EXPIRES 11/30/2011

STEVEN M. RIENKS
062-044619
LICENSED PROFESSIONAL ENGINEER OF ILLINOIS

AMERICAN
SURVEYING & ENGINEERING, P.C.
SURVEYORS - ENGINEERS
GEODESISTS MAPPING SCIENTISTS
Chicago: 312-277-2000 / Fax 312-277-2002
Dixon: 815-288-6231 / Fax 815-288-6277
Aurora: 603-897-4105 / Fax 630-897-4121
Illinois Professional Design Firm No. 184-003192

FILE NAME = P144499-sht-drain.dgn	USER NAME = $USER$	DESIGNED -	REVISED -
		DRAWN -	REVISED -
	PLOT SCALE = 50.000 ' / IN.	CHECKED -	REVISED -
	PLOT DATE = 4/23/2010	DATE -	REVISED -

STATE OF ILLINOIS
DEPARTMENT OF TRANSPORTATION

95th STREET @
104th AVENUE / FLAVIN ROAD
SUE STUDY PLAN

SCALE: 1"=50' | SHEET NO. OF SHEETS | STA. 204+00 TO STA. 231+00

F.A.U. RTE.	SECTION	COUNTY	TOTAL SHEETS	SHEET NO.
1566	29 R-N-1	COOK	120	37

CONTRACT NO. 62377

ILLINOIS FED. AID PROJECT

PART OF THE SW 1/4 OF SECTION 4, PART OF THE NE 1/4 OF SECTION 8 AND PART OF THE NW 1/4 OF SECTION 9, ALL IN T37N, R12 EAST OF THE 3rd PM, COOK COUNTY, ILLINOIS.

F.A.P. RTE.	SECTION	COUNTY	TOTAL SHEETS	SHEET NO.
95th St.		COOK	120	38
STATION 25+00.00		TO STATION 35+00.00		
FED. ROAD DIST. NO. 1	ILLINOIS	FED. AID PROJECT		

BASIS OF BEARINGS IS THE ILLINOIS STATE PLANE COORDINATE SYSTEM, EAST ZONE, NAD 83.

N

50' 0' 50'

PARCEL NO.	OWNER	TOTAL HOLDING ACRES	R.O.W. REQUIRED ACRES	PREVIOUSLY DEDICATED ACRES	REMAINDER ACRES	EASEMENTS TEMP ACRES	EASEMENTS PERM ACRES	EASEMENT PURPOSE	PERMANENT TAX NUMBER	PROPERTY ACQUIRED BY
0G70001	FOREST PRESERVE DISTRICT OF COOK COUNTY	**809.7±	N/A	N/A	**809.7±	N/A	0.596	N/A	23-04-300-001	

** AREAS OF CONTIGUOUS PROPERTY CALCULATED USING EXISTING PLATS AND RECORDS.

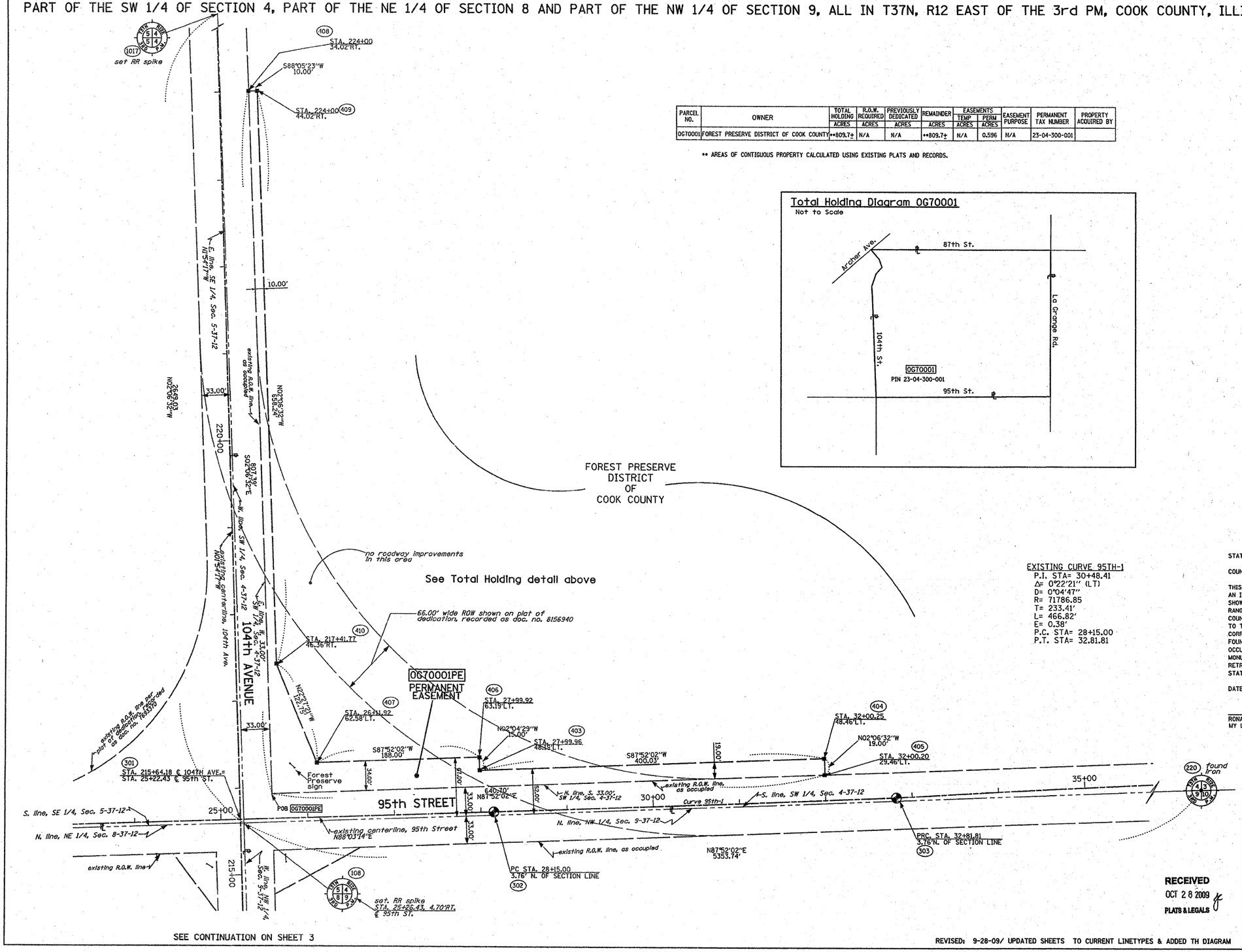

EXISTING CURVE 95TH-1
P.I. STA= 30+48.41
Δ= 0°22'21" (LT)
D= 0°04'47"
R= 71786.85
T= 233.41'
L= 466.82'
E= 0.38'
P.C. STA= 28+15.00
P.T. STA= 32.81.81

LEGEND

- EXISTING CENTERLINE
- PROPOSED CENTERLINE
- EXISTING RIGHT OF WAY LINE
- PROPOSED RIGHT OF WAY LINE
- PROPOSED EASEMENT LINE
- SECTION LINE
- QUARTER SECTION LINE
- QUARTER QUARTER SECTION LINE
- PROPERTY (DEED) LINE
- APL — APPARENT PROPERTY LINE
- 121.45 — MEASURED DIMENSION
- 123.45 (COMP) — COMPUTED DIMENSION
- (123.45) — RECORDED DIMENSION
- FOUND IRON PIPE OR IRON ROD
- SET 5/8 INCH IRON ROD PERMANENT SURVEY MONUMENT,
- I.D.O.T. STD. 2135 (TO BE SET BY OTHERS)
- CUT CROSS FOUND OR SET
- SAME OWNERSHIP
- TEL — EXISTING TELEPHONE SPLICE BOX
- LGT — EXISTING STREET LIGHT
- MAIL BOX — EXISTING MAIL BOX
- WELL — EXISTING WELL HEAD

■ STAKING OF PROPOSED RIGHT OF WAY. SET 5/8 INCH METAL ROD WITH DIVISION OF HIGHWAY SURVEY MARKER TO MONUMENT THE POSITION SHOWN. IDENTIFIED BY INSCRIPTION DATA AND SURVEYORS REGISTRATION NUMBER.

■M STAKING OF PROPOSED RIGHT OF WAY IN CULTIVATED AREAS. SET 5/8 INCH METAL ROD WITH DIVISION OF HIGHWAY SURVEY MARKER 20 INCHES BELOW GROUND SURFACE TO MONUMENT THE POSITION SHOWN. IDENTIFIED BY INSCRIPTION DATA AND SURVEYORS REGISTRATION NUMBER.

SECTION CORNER — QUARTER SECTION CORNER

STATE OF ILLINOIS)
) SS
COUNTY OF WILL)

THIS IS TO CERTIFY THAT RUETTIGER, TONELLI & ASSOCIATES, INC., AN ILLINOIS DESIGN FIRM, HAS SURVEYED THE PLAT OF HIGHWAYS SHOWN HEREON IN SECTIONS 4, 8 AND 9, TOWNSHIP 37 NORTH, RANGE 12 EAST OF THE THIRD PRINCIPAL MERIDIAN, COOK COUNTY. THAT THE SURVEY IS TRUE AND COMPLETE AS SHOWN TO THE BEST OF MY KNOWLEDGE AND BELIEF, THAT THE PLAT CORRECTLY REPRESENTS SAID SURVEY, THAT ALL MONUMENTS FOUND AND ESTABLISHED ARE OF PERMANENT QUALITY AND OCCUPY THE POSITIONS SHOWN THEREON AND THAT THE MONUMENTS ARE SUFFICIENT TO ENABLE THE SURVEY TO BE RETRACED. MADE FOR THE DEPARTMENT OF TRANSPORTATION, STATE OF ILLINOIS.

DATED AT JOLIET, ILLINOIS THIS ____ DAY OF _____, ____ A.D.

RONALD F. HODGEN P.L.S. NO. 2630
MY LICENSE EXPIRES 11-30-2010

RUETTIGER, TONELLI & ASSOCIATES, INC.
Land Surveyors/Engineers/Planners/Landscape Architects/U.E.S. Consultants
2174 QUEEN STREET
JOLIET, ILLINOIS 60435
PH. (815) 744-6600 FAX (815) 744-0101

ILLINOIS DEPARTMENT OF TRANSPORTATION
PLAT OF HIGHWAYS

95th STREET at 104th AVENUE
COOK COUNTY
JOB NO. R90-040-01
STATION 25+00 TO STATION 32+00

SCALE: 1" = 50' SHEET 2 OF 3

ILLINOIS DEPARTMENT OF TRANSPORTATION
DIVISION OF HIGHWAYS/DISTRICT 1
201 W. CENTER COURT
SCHAUMBURG, ILLINOIS 60196-1096

RECEIVED
OCT 28 2009
PLATS & LEGALS

SEE CONTINUATION ON SHEET 3

REVISED: 9-28-09/ UPDATED SHEETS TO CURRENT LINETYPES & ADDED TH DIAGRAM

SHEET 1 OF -- IS A COVER SHEET AND IS NOT RECORDED
RT&A 20060650 (95TH STREET)

ROUTE: 95TH STREET SECTION: COUNTY: COOK JOB NO. R90-040-01

h12.dgn 10/28/2009 1:09:06 PM

PART OF THE SW 1/4 OF SECTION 4, PART OF THE NE 1/4 OF SECTION 8 AND PART OF THE NW 1/4 OF SECTION 9, ALL IN T37N, R12 EAST OF THE 3rd PM, COOK COUNTY, ILLINOIS.

F.A.P. RTE.	SECTION	COUNTY	TOTAL SHEETS	SHEET NO.
95th ST.		COOK	120	39
STATION 20+00.00		TO STATION 30+00.00		
FED. ROAD DIST. NO. 1	ILLINOIS	FED. AID PROJECT		

BASIS OF BEARINGS IS THE ILLINOIS STATE PLANE COORDINATE SYSTEM, EAST ZONE, NAD 83.

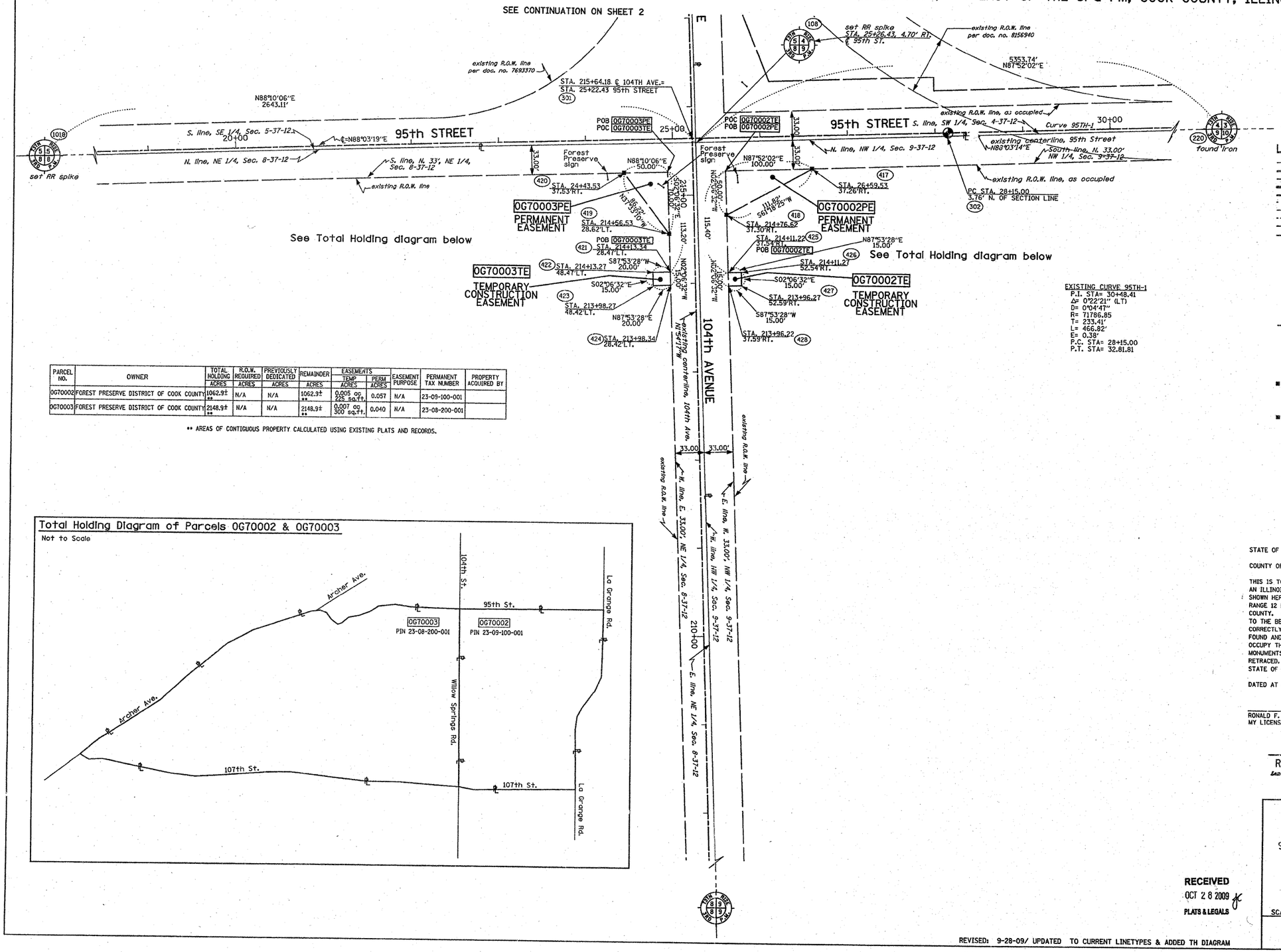

PARCEL NO.	OWNER	TOTAL HOLDING ACRES	R.O.W. REQUIRED ACRES	PREVIOUSLY DEDICATED ACRES	REMAINDER ACRES	EASEMENTS TEMP ACRES	EASEMENTS PERM ACRES	EASEMENT PURPOSE	PERMANENT TAX NUMBER	PROPERTY ACQUIRED BY
0G70002	FOREST PRESERVE DISTRICT OF COOK COUNTY	1062.9± **	N/A	N/A	1062.9± **	0.005 ac. 222 sq.ft.	0.057	N/A	23-09-100-001	
0G70003	FOREST PRESERVE DISTRICT OF COOK COUNTY	2148.9± **	N/A	N/A	2148.9± **	0.007 ac. 300 sq.ft.	0.040	N/A	23-08-200-001	

** AREAS OF CONTIGUOUS PROPERTY CALCULATED USING EXISTING PLATS AND RECORDS.

EXISTING CURVE 95TH-1
P.I. STA= 30+48.41
Δ= 0°22'21" (LT)
D= 0°04'47"
R= 71786.85
T= 233.41'
L= 466.82'
E= 0.38'
P.C. STA= 28+15.00
P.T. STA= 32.81.81

LEGEND

- EXISTING CENTERLINE
- PROPOSED CENTERLINE
- EXISTING RIGHT OF WAY LINE
- PROPOSED RIGHT OF WAY LINE
- PROPOSED EASEMENT LINE
- SECTION LINE
- QUARTER SECTION LINE
- QUARTER QUARTER SECTION LINE
- ℄ PROPERTY (DEED) LINE
- APL APPARENT PROPERTY LINE
- 121.45 MEASURED DIMENSION
- 123.45 (COMP) COMPUTED DIMENSION
- (123.45) RECORDED DIMENSION
- FOUND IRON PIPE OR IRON ROD
- SET ⅝ INCH IRON ROD PERMANENT SURVEY MONUMENT.
- I.D.O.T. STD. 2135 (TO BE SET BY OTHERS)
- CUT CROSS FOUND OR SET
- SAME OWNERSHIP
- TEL EXISTING TELEPHONE SPLICE BOX
- LGT EXISTING STREET LIGHT
- MAIL BOX EXISTING MAIL BOX
- WELL EXISTING WELL HEAD
- ■ STAKING OF PROPOSED RIGHT OF WAY. SET ⅝ INCH METAL ROD WITH DIVISION OF HIGHWAY SURVEY MARKER TO MONUMENT THE POSITION SHOWN, IDENTIFIED BY INSCRIPTION DATA AND SURVEYORS REGISTRATION NUMBER.
- ■M STAKING OF PROPOSED RIGHT OF WAY IN CULTIVATED AREAS. SET ⅝ INCH METAL ROD WITH DIVISION OF HIGHWAY SURVEY MARKER 20 INCHES BELOW GROUND SURFACE TO MONUMENT THE POSITION SHOWN, IDENTIFIED BY INSCRIPTION DATA AND SURVEYORS REGISTRATION NUMBER.
- 2 11 12 SECTION CORNER
- 27 26 QUARTER SECTION CORNER

Total Holding Diagram of Parcels 0G70002 & 0G70003

Not to Scale

STATE OF ILLINOIS)
) SS
COUNTY OF WILL)

THIS IS TO CERTIFY THAT RUETTIGER, TONELLI & ASSOCIATES, INC., AN ILLINOIS DESIGN FIRM, HAS SURVEYED THE PLAT OF HIGHWAYS SHOWN HEREON IN SECTIONS 4, 8 AND 9, TOWNSHIP 37 NORTH, RANGE 12 EAST OF THE THIRD PRINCIPAL MERIDIAN, COOK COUNTY. THAT THE SURVEY IS TRUE AND COMPLETE AS SHOWN TO THE BEST OF MY KNOWLEDGE AND BELIEF, THAT THE PLAT CORRECTLY REPRESENTS SAID SURVEY, THAT ALL MONUMENTS FOUND AND ESTABLISHED ARE OF PERMANENT QUALITY AND OCCUPY THE POSITIONS SHOWN THEREON AND THAT THE MONUMENTS ARE SUFFICIENT TO ENABLE THE SURVEY TO BE RETRACED. MADE FOR THE DEPARTMENT OF TRANSPORTATION, STATE OF ILLINOIS.

DATED AT JOLIET, ILLINOIS THIS ____ DAY OF _____ . A.D.

RONALD F. HODGEN P.L.S. NO. 2630
MY LICENSE EXPIRES 11-30-2010

RUETTIGER, TONELLI & ASSOCIATES, INC.
Land Surveyors/Engineers/Planners/Landscape Architects/G.I.S. Consultants
2174 OMEGA STREET
JOLIET, ILLINOIS 60435
PH. (815) 744-5600 FAX (815) 744-0153

RECEIVED
OCT 28 2009
PLATS & LEGALS

ILLINOIS DEPARTMENT OF TRANSPORTATION
PLAT OF HIGHWAYS

95th STREET at 104th AVENUE
COOK COUNTY
JOB NO. R90-040-01
STATION 100+00 TO STATION 119+08.13

SCALE: 1" = 50' SHEET 3 OF 3

ILLINOIS DEPARTMENT OF TRANSPORTATION
DIVISION OF HIGHWAYS/DISTRICT 1
201 W. CENTER COURT
SCHAUMBURG, ILLINOIS 60196-1096

REVISED: 9-28-09/ UPDATED TO CURRENT LINETYPES & ADDED TH DIAGRAM

SHEET 1 OF -- IS A COVER SHEET AND IS NOT RECORDED
RT&A 20060650 (95TH STREET)

ROUTE: 95TH STREET SECTION: COUNTY: COOK JOB NO. R90-040-01

*REF-PMK01
*REF-PMK02

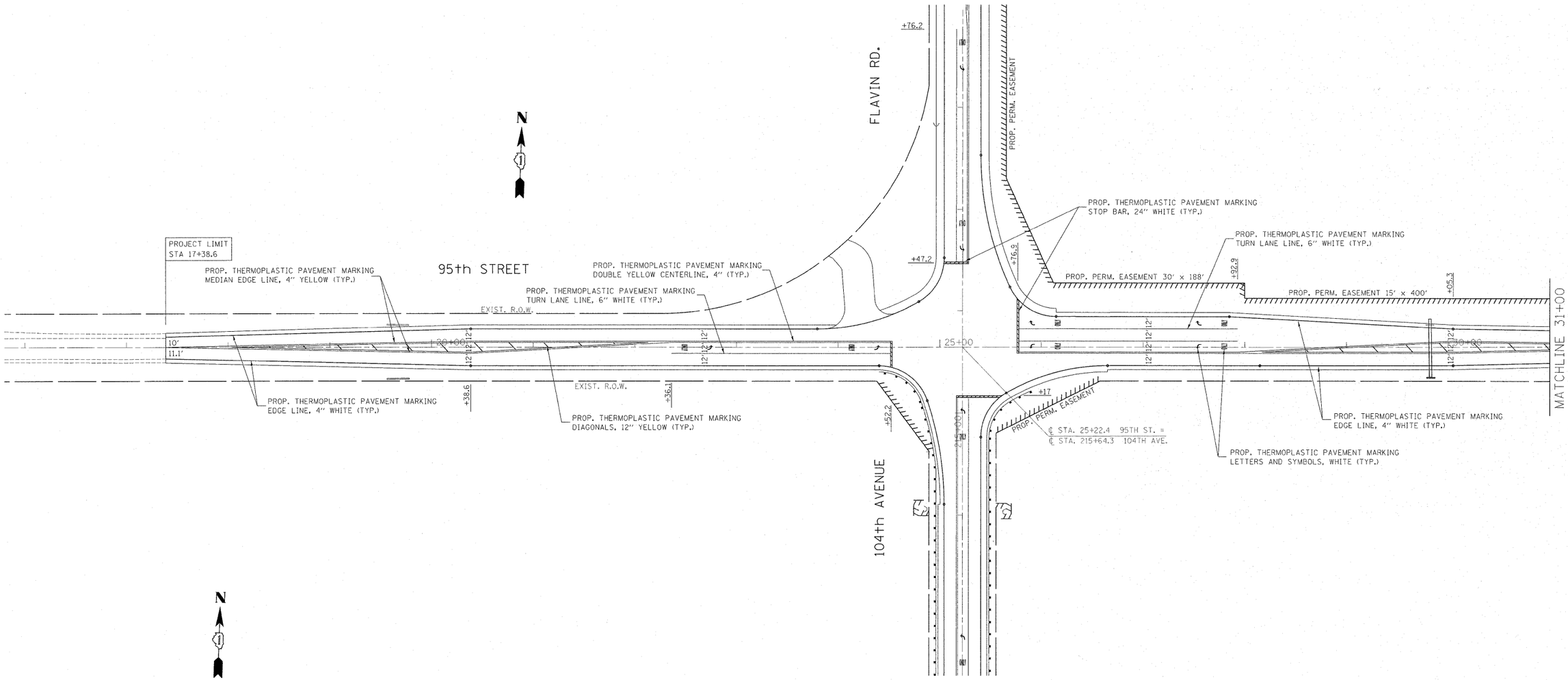

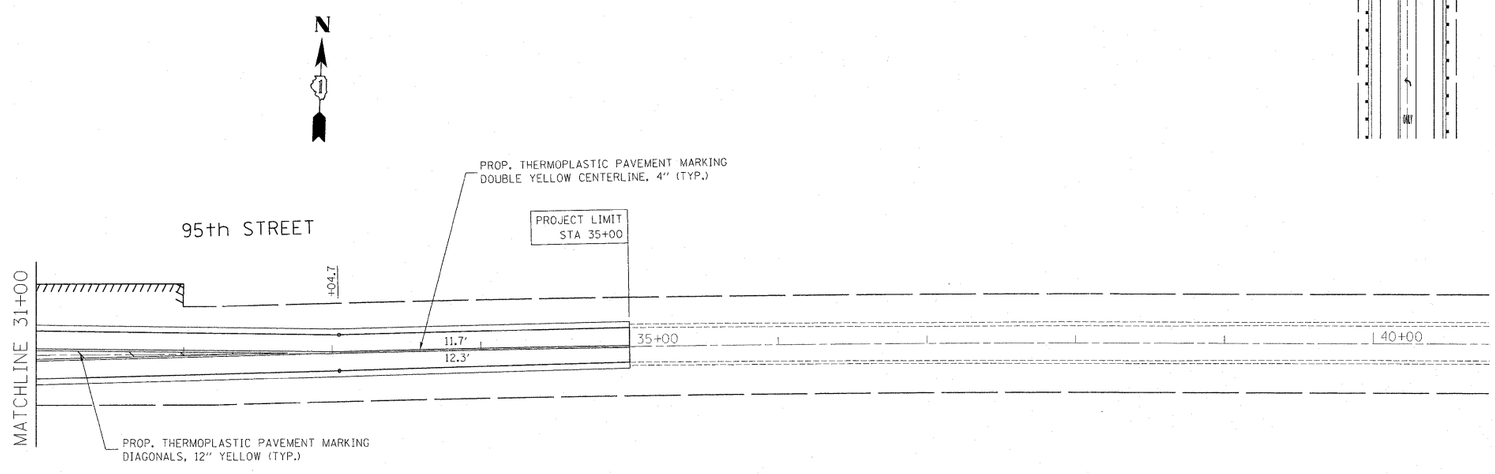

FILE NAME = c:\pw_work\pwidot\steedpa\d0159915\P144499-Design.dgn	USER NAME - steedpa	DESIGNED -	REVISED -	STATE OF ILLINOIS DEPARTMENT OF TRANSPORTATION	95TH STREET 104TH AVE./FLAVIN ROAD PAVEMENT MARKING PLAN	F.A.U RTE.	SECTION	COUNTY	TOTAL SHEETS	SHEET NO.
		DRAWN -	REVISED -			1566	29 R-N-1	COOK	120	40
	PLOT SCALE = 50.1338 ' / in.	CHECKED -	REVISED -					CONTRACT NO. 62377		
	PLOT DATE = 1/19/2012	DATE -	REVISED -		SCALE: SHEET NO. OF SHEETS STA. TO STA.			ILLINOIS FED. AID PROJECT		

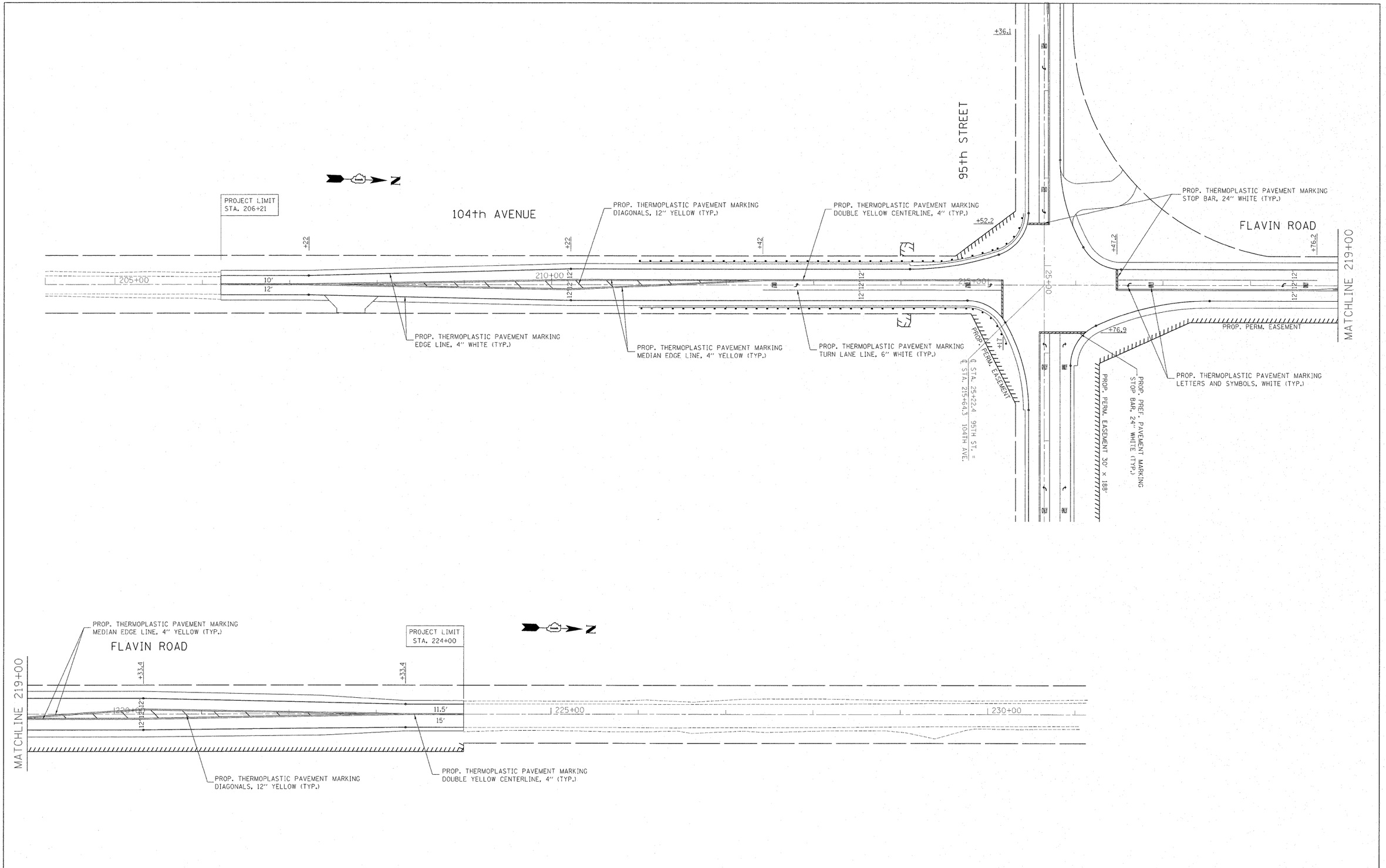

FILE NAME = c:\pw_work\pwidot\steadpa\d0159915\P144499-Design.dgn	USER NAME = steadpa	DESIGNED -	REVISED -
		DRAWN -	REVISED -
	PLOT SCALE = 50.1205 ' / in.	CHECKED -	REVISED -
	PLOT DATE = 1/19/2012	DATE -	REVISED -

STATE OF ILLINOIS
DEPARTMENT OF TRANSPORTATION

95TH STREET 104TH AVE./FLAVIN ROAD
PAVEMENT MARKING PLAN

SCALE: | SHEET NO. OF SHEETS | STA. TO STA.

F.A.U RTE.	SECTION	COUNTY	TOTAL SHEETS	SHEET NO.
1566	29 R-N-1	COOK	120	41

CONTRACT NO. 62377

ILLINOIS FED. AID PROJECT

P144499-Design.dgn 1/19/2012 10:35:06 AM User=steadpa

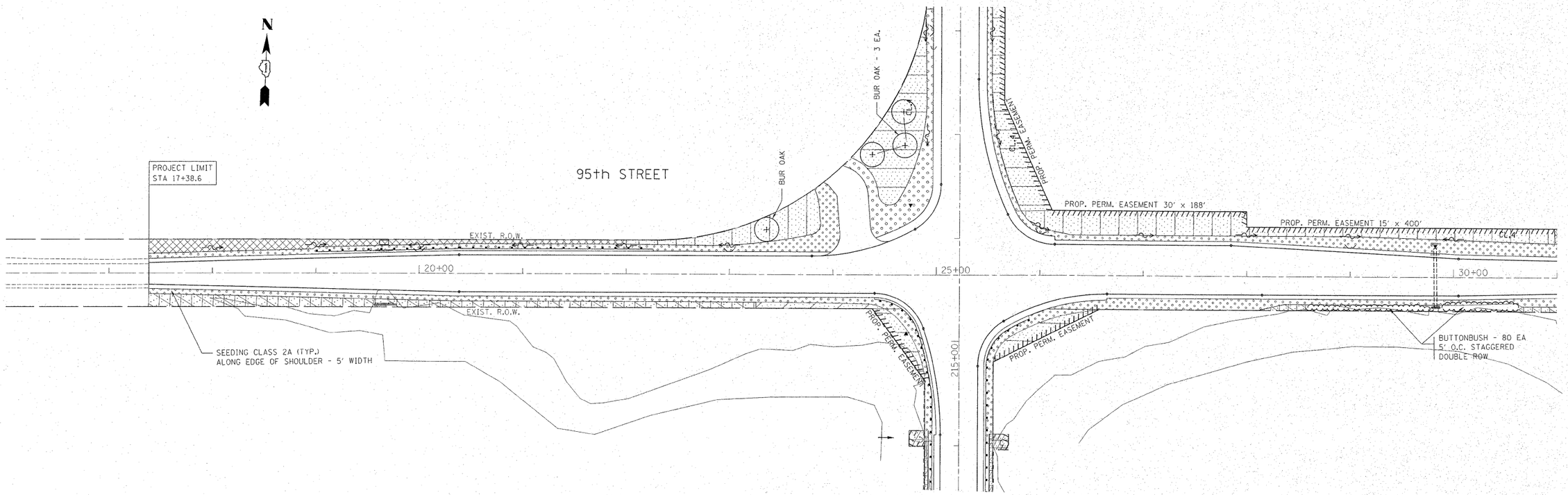

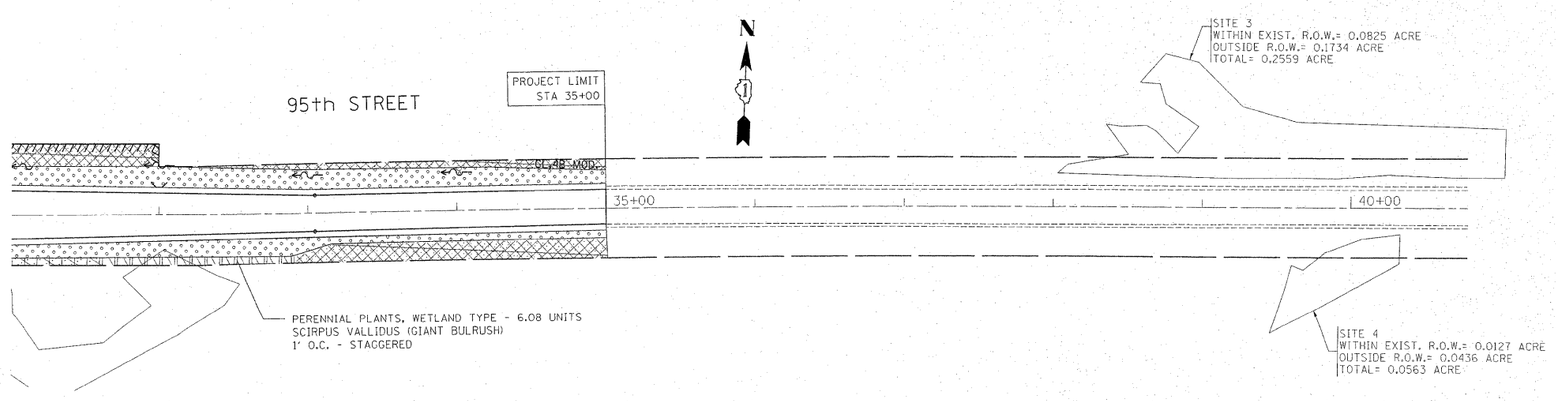

LEGEND

- TEMPORARY FENCE TO PROTECT WETLANDS
- SHRUBS
- PR SHADE TREE
- UNDERSTORY, INTERMEDIATE TREE
- SEEDING CLASS 2A
  FERTILIZER NUTRIENTS
  TOPSOIL FURNISH & PLACE, 4"
- SEEDING CLASS 4
  COMPOST FURNISH & PLACE, 4"
- SEEDING CLASS 4 (MODIFIED)
  COMPOST FURNISH & PLACE, 4"
- SEEDING CLASS 4B MODIFIED
  COMPOST FURNISH & PLACE, 4"
- PERENNIAL PLANTS

ALL SEDIMENT AREAS SHALL BE COVERED
WITH EROSION CONTROL BLANKET

FILE NAME =	USER NAME = steedpo	DESIGNED -	REVISED - 10/27/10 S. LIPKIE	STATE OF ILLINOIS DEPARTMENT OF TRANSPORTATION	95TH ST. 104TH AVE./FLAVIN RD. PROPOSED LANDSCAPING PLAN	F.A.U. RTE.	SECTION	COUNTY	TOTAL SHEETS	SHEET NO.
c:\pw_work\pwidot\steedpo\d0159937\P144499-sht-lndscp.dgn		DRAWN -	REVISED -			1566	29-R-N-1	COOK	120	42
	PLOT SCALE = 50.000 ' / in.	CHECKED -	REVISED -					CONTRACT NO. 62377		
	PLOT DATE = 12/20/2011	DATE -	REVISED -		SCALE: SHEET NO. OF SHEETS STA. TO STA.		ILLINOIS	FED. AID PROJECT		

P144499-sht-lndscp.dgn 12/20/2011 3:35:24 PM User=steedpo

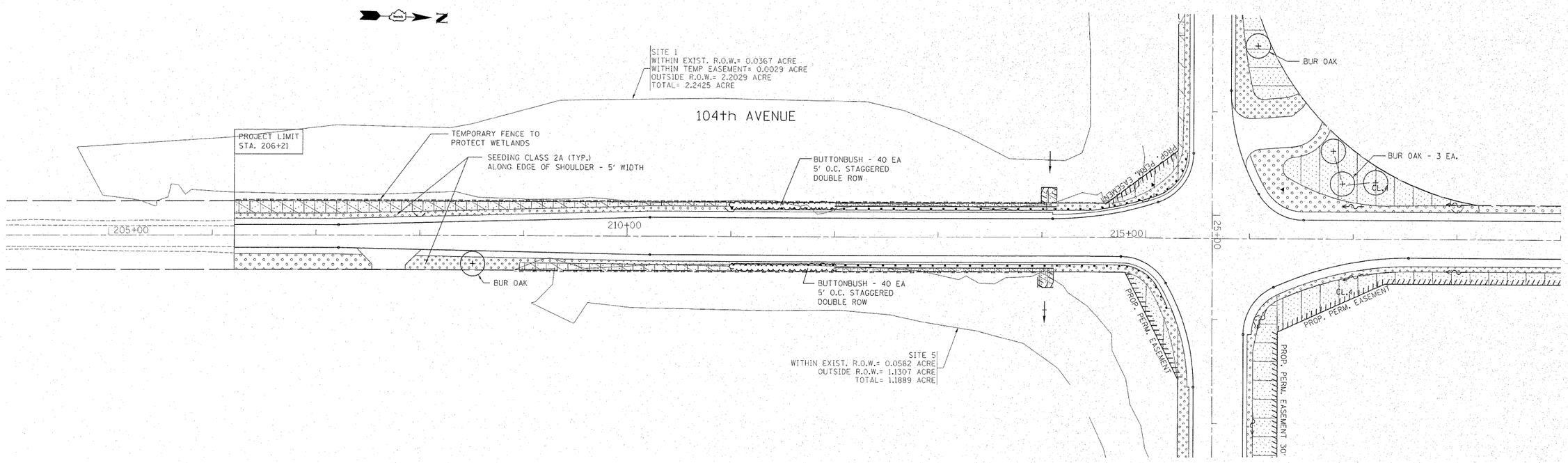

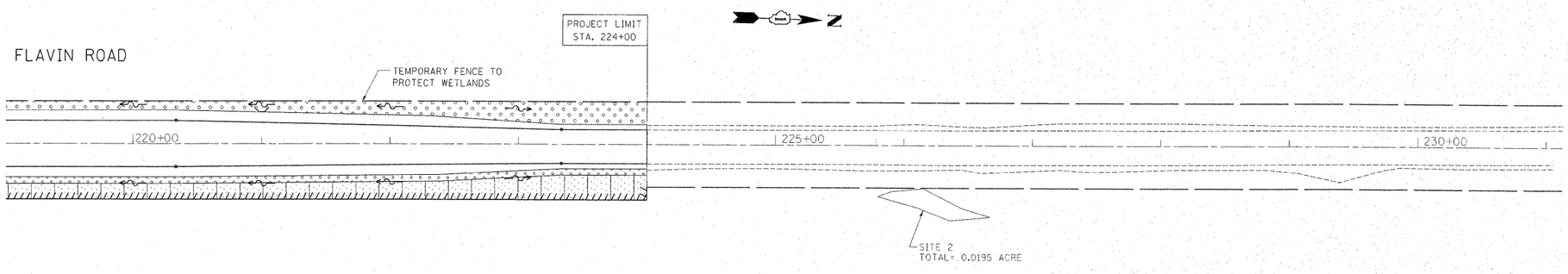

LEGEND

- TEMPORARY FENCE TO PROTECT WETLANDS
- SHRUBS
- PR SHADE TREE
- UNDERSTORY, INTERMEDIATE TREE
- SEEDING CLASS 2A
  FERTILIZER NUTRIENTS
  TOPSOIL FURNISH & PLACE, 4"
- SEEDING CLASS 4
  COMPOST FURNISH & PLACE, 4"
- SEEDING CLASS 4 (MODIFIED)
  COMPOST FURNISH & PLACE, 4"
- SEEDING CLASS 4B MODIFIED
  COMPOST FURNISH & PLACE, 4"
- PERENNIAL PLANTS

ALL SEDIMENT AREAS SHALL BE COVERED
WITH EROSION CONTROL BLANKET

FILE NAME = c:\pw_work\pwidot\steedpa\d0159937\P144499-sht-lndscp.dgn	USER NAME = steedpa	DESIGNED -	REVISED - 10/27/10 S. LIPKIE	STATE OF ILLINOIS DEPARTMENT OF TRANSPORTATION
		DRAWN -	REVISED -	
	PLOT SCALE = 50.000 ' / in.	CHECKED -	REVISED -	
	PLOT DATE = 12/20/2011	DATE -	REVISED -	

95TH ST. 104TH AVE./FLAVIN RD.
PROPOSED LANDSCAPING PLAN

SCALE: SHEET NO. OF SHEETS STA. TO STA.

F.A.U. RTE.	SECTION	COUNTY	TOTAL SHEETS	SHEET NO.
1566	29-R-N-1	COOK	120	43
		CONTRACT NO. 62377		
		ILLINOIS FED. AID PROJECT		

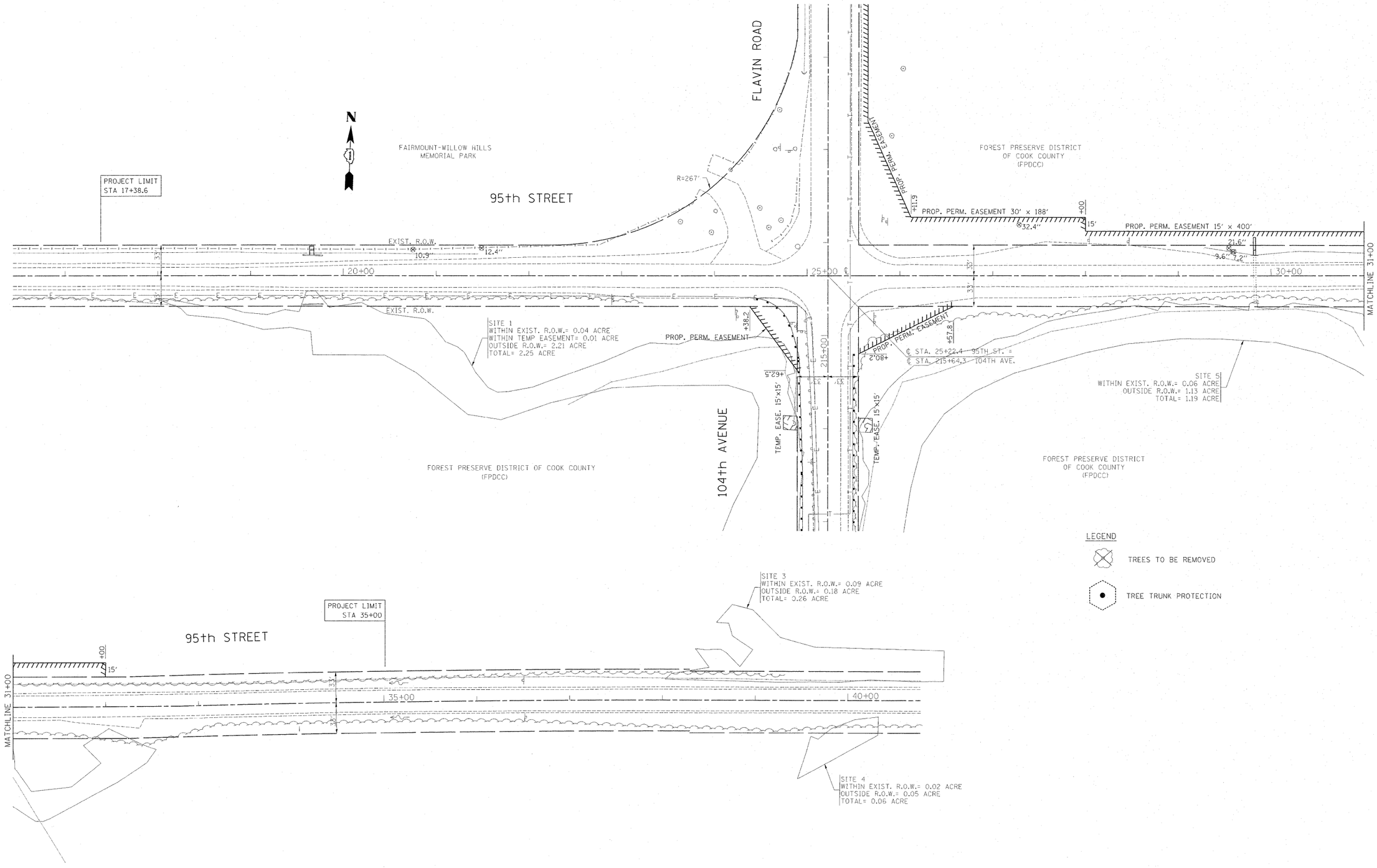

FILE NAME = c:\pw_work\pwidot\steedpa\d8159915\P144499-Design.dgn	USER NAME = steedpa	DESIGNED -	REVISED -	STATE OF ILLINOIS DEPARTMENT OF TRANSPORTATION	TREE REMOVAL PLAN 95th STREET @ 104th AVENUE/ FLAVIN ROAD	F.A.U. RTE.	SECTION	COUNTY	TOTAL SHEETS	SHEET NO.
	PLOT SCALE = 50.0000 ' / in.	DRAWN -	REVISED -			1566	29 R-N-1	COOK	120	44
	PLOT DATE = 2/3/2012	CHECKED -	REVISED -					CONTRACT NO. 62377		
		DATE -	REVISED -		SCALE: SHEET NO. OF SHEETS STA. TO STA.		ILLINOIS	FED. AID PROJECT		

P144499-Design.dgn 2/3/2012 2:26:26 PM User=steedpa

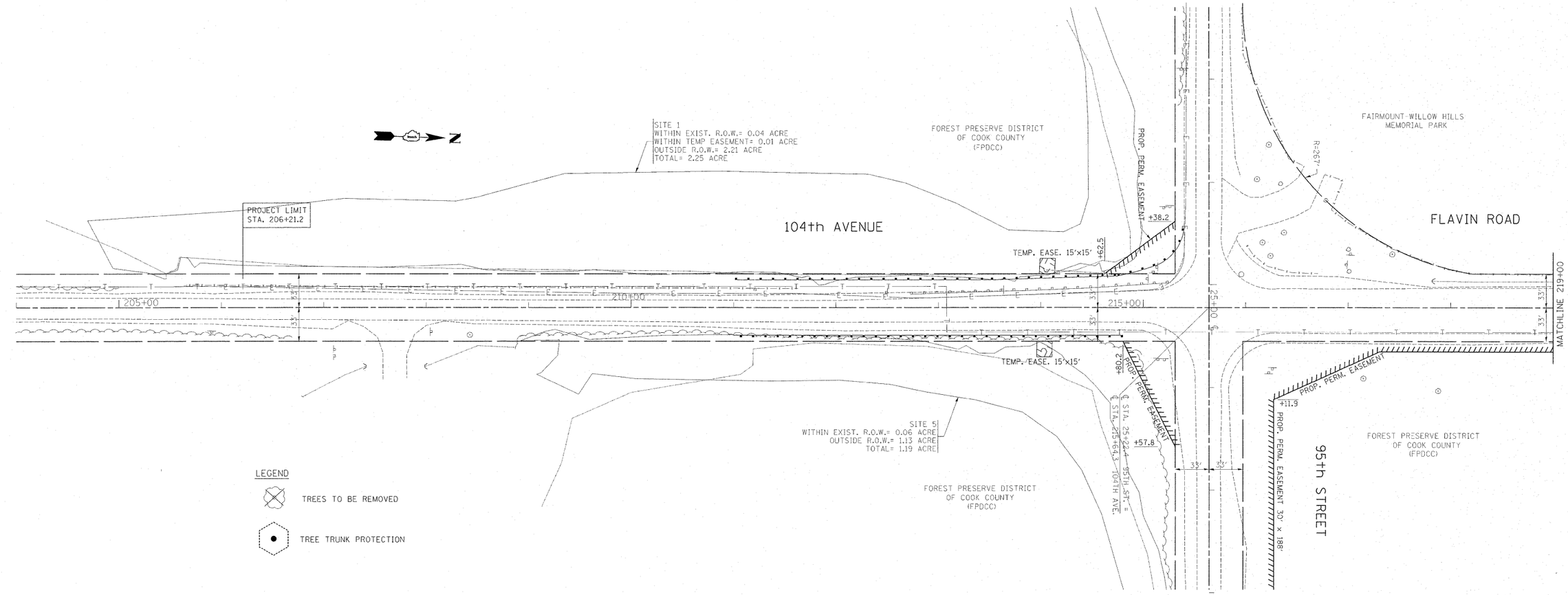

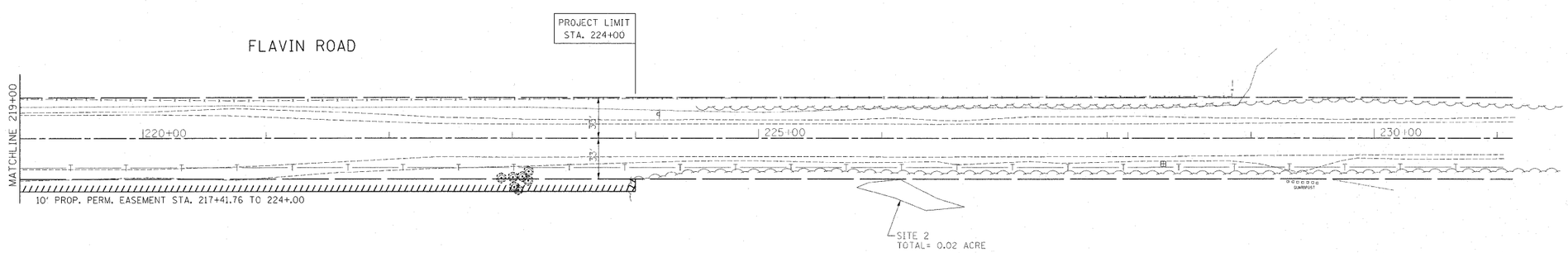

FILE NAME = c:\pw_work\pwidot\steedpo\d01599;5\P144499-Design.dgn	USER NAME = steedpo	DESIGNED -	REVISED -	**STATE OF ILLINOIS DEPARTMENT OF TRANSPORTATION**	TREE REMOVAL PLAN 95th STREET @ 104th AVENUE/ FLAVIN ROAD	F.A.U. RTE.	SECTION	COUNTY	TOTAL SHEETS / SHEET NO.
		DRAWN -	REVISED -			1566	29 R-N-1	COOK	120 / 45
	PLOT SCALE = 50.0000 ' / in.	CHECKED -	REVISED -					CONTRACT NO. 62377	
	PLOT DATE = 2/3/2012	DATE -	REVISED -		SCALE: SHEET NO. OF SHEETS STA. TO STA.			ILLINOIS FED. AID PROJECT	

P144499-Design.dgn 2/3/2012 2:26:53 PM User:steedpo

RESTORATION OF WORK AREA. RESTORATION OF THE TRAFFIC SIGNAL WORK AREA SHALL BE INCLUDED IN THE RELATED PAY ITEM SUCH AS FOUNDATION, CONDUIT, HANDHOLE, TRENCH AND BACKFILL, ETC., AND NO EXTRA COMPENSATION SHALL BE ALLOWED. ALL ROADWAY SURFACES SUCH AS SHOULDERS, MEDIAN, SIDEWALKS, PAVEMENT ETC. SHALL BE REPLACED IN KIND. ALL DAMAGE TO MOWED LAWNS SHALL BE REPLACED WITH AN APPROVED SOD, AND ALL DAMAGE TO UNMOWED FIELDS SHALL BE SEEDED IN ACCORDANCE WITH STANDARD SPECIFICATIONS 252 AND 250 RESPECTIVELY.

NOTES:

1. CONTRACTOR SHALL FIELD VERIFY PROPOSED DITCH LOCATIONS AND SHALL MAKE NECESSARY ADJUSTMENTS TO AVOID CONFLICTS WITH PROPOSED TRAFFIC SIGNAL EQUIPMENT.
2. FINAL CONNECTION FOR SERVICE SHALL BE COORDINATED WITH COMMONWEALTH EDISON DURING CONSTRUCTION.

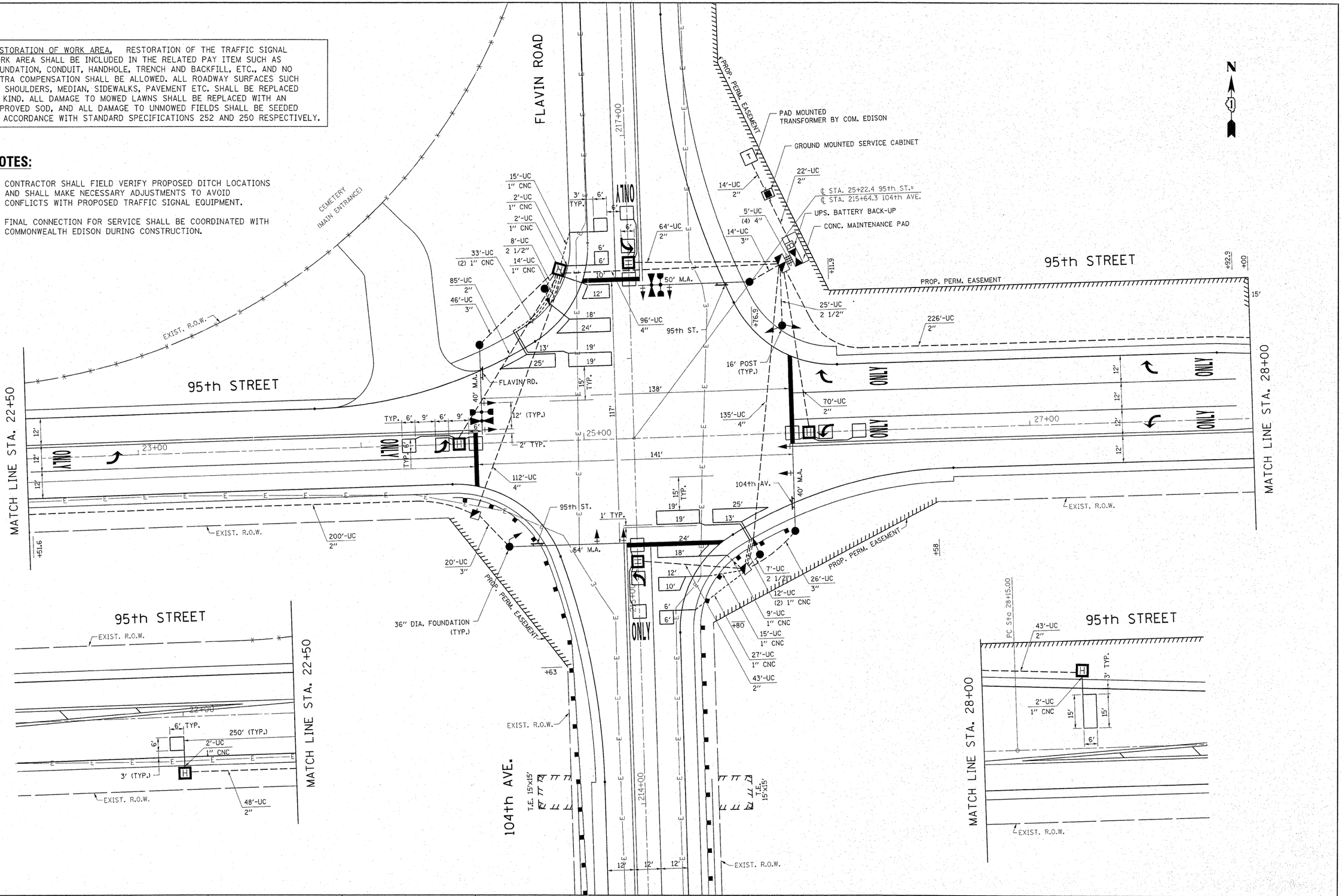

FILE NAME = c:\pw_work\pwidot\pociechal\d0113528\95th104th.dgn	USER NAME = pociechal	DESIGNED -	REVISED - BCK 4/5/10	STATE OF ILLINOIS DEPARTMENT OF TRANSPORTATION	TRAFFIC SIGNAL INSTALLATION PLAN 95th STREET AT 104th AVENUE /FLAVIN ROAD	F.A.U RTE.	SECTION	COUNTY	TOTAL SHEETS	SHEET NO.
		DRAWN -	REVISED - LP 1/12/12			1566	29R-N-1	COOK	120	46
	PLOT SCALE = 20.000 ' / in.	CHECKED -	REVISED - LP 1/20/12					CONTRACT NO. 62377		
	PLOT DATE = 1/20/2012	DATE -	REVISED -		SCALE: 1"=20' SHEET NO. OF SHEETS STA. TO STA.		ILLINOIS FED. AID PROJECT			

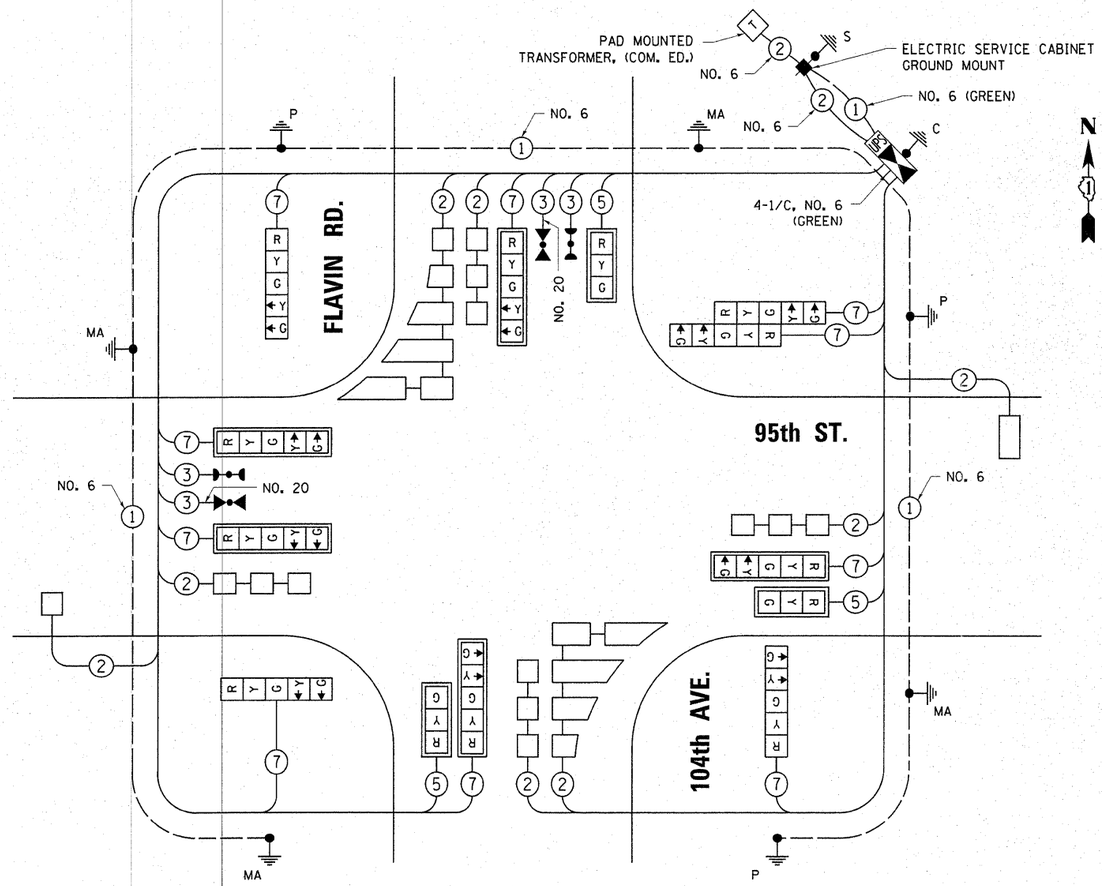

CABLE PLAN

SCHEDULE OF QUANTITIES

	ITEM	UNIT	TOTAL QTY.
	SIGN PANEL - TYPE 1	SQ FT	39
	SERVICE INSTALLATION - GROUND MOUNTED	EACH	1
	UNDERGROUND CONDUIT, GALVANIZED STEEL, 2" DIA.	FOOT	815
	UNDERGROUND CONDUIT, GALVANIZED STEEL, 2 1/2" DIA.	FOOT	40
	UNDERGROUND CONDUIT, GALVANIZED STEEL, 3" DIA.	FOOT	106
	UNDERGROUND CONDUIT, GALVANIZED STEEL, 4" DIA.	FOOT	363
	HANDHOLE	EACH	2
	HEAVY-DUTY HANDHOLE	EACH	7
	DOUBLE HANDHOLE	EACH	1
	FULL-ACTUATED CONTROLLER AND TYPE IV CABINET	EACH	1
*	ELECTRIC CABLE IN CONDUIT, SIGNAL NO. 14 3C	FOOT	340
	ELECTRIC CABLE IN CONDUIT, SIGNAL NO. 14 5C	FOOT	668
	ELECTRIC CABLE IN CONDUIT, SIGNAL NO. 14 7C	FOOT	1,913
	ELECTRIC CABLE IN CONDUIT, LEAD-IN, NO. 14 1 PAIR	FOOT	1,707
	ELECTRIC CABLE IN CONDUIT, SERVICE, NO. 6 2 C	FOOT	54
	ELECTRIC CABLE IN CONDUIT, EQUIPMENT GROUNDING CONDUCTOR, NO. 6 1C	FOOT	722
	TRAFFIC SIGNAL POST, GALVANIZED STEEL 16 FT.	EACH	3
	STEEL MAST ARM ASSEMBLY AND POLE, 40 FT.	EACH	2
	STEEL MAST ARM ASSEMBLY AND POLE, 50 FT.	EACH	1
	STEEL MAST ARM ASSEMBLY AND POLE, 54 FT.	EACH	1
	CONCRETE FOUNDATION, TYPE A	FOOT	12
	CONCRETE FOUNDATION, TYPE C	FOOT	4
	CONCRETE FOUNDATION, TYPE E 36-INCH DIAMETER	FOOT	56
	SIGNAL HEAD, LED, 1-FACE, 3-SECTION, MAST-ARM MOUNTED	EACH	3
	SIGNAL HEAD, LED, 1-FACE, 5-SECTION, BRACKET MOUNTED	EACH	3
	SIGNAL HEAD, LED, 1-FACE, 5-SECTION, MAST-ARM MOUNTED	EACH	5
	SIGNAL HEAD, LED, 2-FACE, 5-SECTION, BRACKET MOUNTED	EACH	1
	TRAFFIC SIGNAL BACKPLATE, LOUVERED, ALUMINUM	EACH	8
	INDUCTIVE LOOP DETECTOR	EACH	8
	DETECTOR LOOP, TYPE I	FOOT	1,083
*	LIGHT DETECTOR	EACH	2
*	LIGHT DETECTOR AMPLIFIER	EACH	1
	UNINTERRUPTABLE POWER SUPPLY, SPECIAL	EACH	1
*	ELECTRIC CABLE IN CONDUIT NO. 20 3/C, TWISTED, SHIELDED	FOOT	340

* 100% COST TO NORTH PALOS FIRE PROTECTION DISTRICT

CONTROLLER SEQUENCE

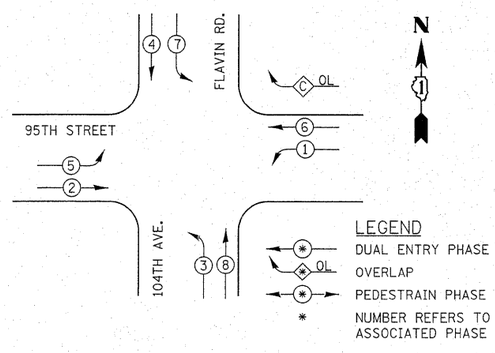

PHASE DESIGNATION DIAGRAM

OVERLAP LETTER		PERMISSIVE PHASE		PROTECTIVE PHASE
C	=	6	+	7

EMERGENCY VEHICLE PREEMPTION SEQUENCE

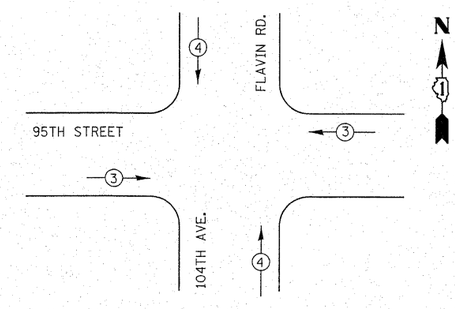

PROPOSED EMERGENCY VEHICLE PREEMPTORS		
EMERGENCY VEHICLE PREEMPTOR	3	4
MOVEMENT	← →	↓ ↑

I.D.O.T. TRAFFIC SIGNAL INSTALLATION ELECTRICAL SERVICE REQUIREMENTS						TOTAL WATTAGE
TYPE	NO. OF LAMPS	WATTAGE XINCAND.	LED	X %	OPERATION	
SIGNAL (RED)	13		17		0.50	110.5
(YELLOW)	13		25		0.25	81.25
(GREEN)	13		15		0.25	48.75
ARROW	20		12		0.10	24
PED. SIGNAL	-		25		1.00	-
CONTROLLER	1		100		1.00	100
ILLUM. SIGN	-		25		0.05	-
VIDEO SYSTEM	-		150		1.00	-
FLASHER					0.50	
ENERGY COSTS TO:					TOTAL =	364.5

ILLINOIS DEPARTMENT OF TRANSPORTATION

DIVISION OF HIGHWAY/DISTRICT 1
201 WEST CENTER COURT/SCHAUMBURG, ILLINOIS 60196-1096

ENERGY SUPPLY: CONTACT: ILYAS MOHIUDDIN
PHONE: (708) 235-2692
COMPANY: COMED

FILE NAME = c:\pw_work\pwidot\poosechal\d0113528\95th104th.dgn	USER NAME = poosechal	DESIGNED -	REVISED - BCK 4/5/10	STATE OF ILLINOIS DEPARTMENT OF TRANSPORTATION	CABLE PLAN, PHASE DESIGNATION DIAGRAM, SCHEDULE OF QUANTITIES 95th STREET AT 104th AVENUE /FLAVIN ROAD
	PLOT SCALE = 20.000 ' / in.	DRAWN -	REVISED - LP 1/12/12		SCALE: NONE
	PLOT DATE = 1/17/2012	CHECKED -	REVISED -		SHEET NO. OF SHEETS STA. TO STA.
		DATE -	REVISED -		

F.A.U RTE.	SECTION	COUNTY	TOTAL SHEETS	SHEET NO.
1566	29R-N-1	COOK	120	47
		CONTRACT NO. 62377		
	ILLINOIS	FED. AID PROJECT		

PANEL SIGN DESIGN TYPE 1

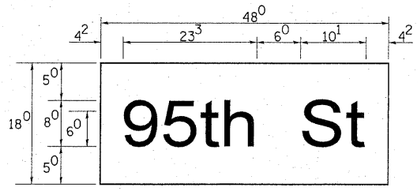

___ Sq. M. each
6.0 Sq. Ft. each
2 Required
Design Series D

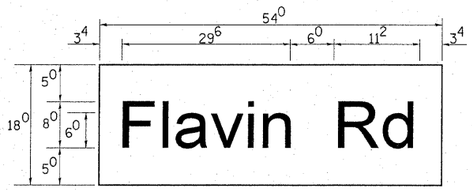

___ Sq. M. each
6.75 Sq. Ft. each
2 Required
Design Series D

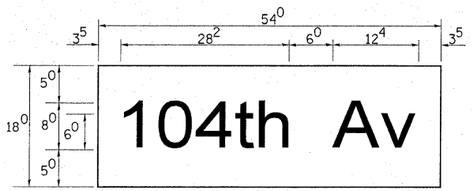

___ Sq. M. each
6.75 Sq. Ft. each
2 Required
Design Series D

NOTE: SIGN DIMENSIONS ARE IN ENGLISH UNITS

SUPPORTING CHANNELS

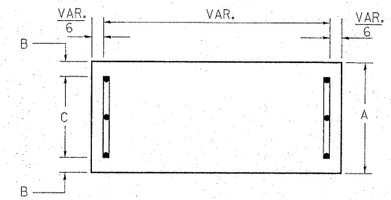

A	B	C
18″	2″	14″

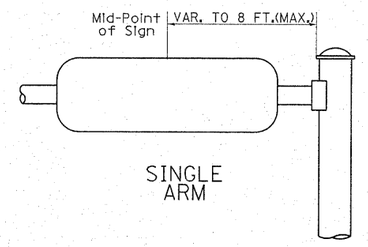

SUPPORTING CHANNELS

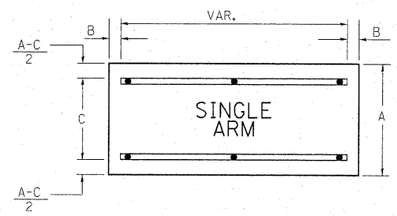

A	B	C
18″	2″	12″
30″	2″	22″

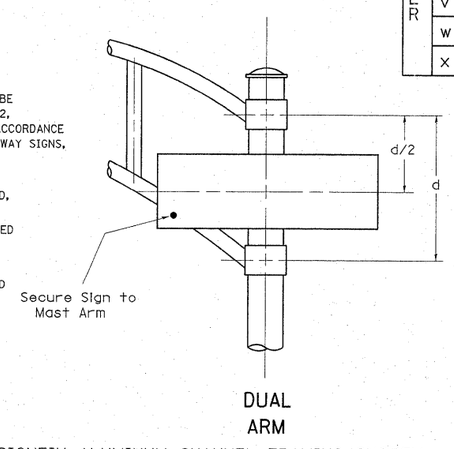

SIGNFIX ALUMINUM CHANNEL FRAMING SYSTEM
shall be used. See Note #5.

GENERAL NOTES

1. WHERE MAST ARM MOUNTED STREET NAME SIGNS ARE SPECIFIED, THE MAST ARM ASSEMBLY AND POLES SHALL BE DESIGNED TO SUPPORT THE LOADINGS CALLED FOR ON STANDARDS 877001, 877002, 877006, 877011 AND 877012, AS APPLICABLE, PLUS TWO (2) SIGN PANELS 2′-6″ x 8′-0″ MOUNTED AS SHOWN. THE DESIGN SHALL BE IN ACCORDANCE WITH THE REQUIREMENTS OF THE CURRENT "STANDARD SPECIFICATIONS FOR STRUCTURAL SUPPORTS FOR HIGHWAY SIGNS, LUMINAIRES, AND TRAFFIC SIGNALS" AS PUBLISHED BY THE AMERICAN ASSOCIATION OF STATE HIGHWAY AND TRANSPORTATION OFFICIALS FOR 80 M.P.H. WIND VELOCITY.
2. ALL SIGNS SHALL HAVE A WHITE REFLECTORIZED LEGEND AND BORDER ON A GREEN REFLECTORIZED BACKGROUND, TYPE A SHEETING.
3. THE SIGN LENGTH SHOULD BE INCREASED IN 6-INCH INCREMENTS, BUT THE OVERALL LENGTH SHOULD NOT EXCEED 8′-0″.
4. ALL BORDERS SHALL BE ¾″ WIDE AND CORNER RADIUS SHALL BE 2-1/4 ″.
5. SIGNFIX ALUMINUM CHANNEL FRAMING SYSTEM SHALL BE USED FOR ALL SIGNS ATTACHED TO SIGNAL POLES AND POSTS. LOCAL SUPPLIERS OF THE SIGNFIX ALUMINUM CHANNEL FRAMING SYSTEM ARE:

   * J.O. HERBERT CO. MIDLOTHIAN, VA.
   * WESTERN REMAC INC. WOODRIDGE, IL.

PARTS LISTING:

SIGN CHANNEL	PART #HPN053 (MED. CHANNEL)
SIGN SCREWS	¼″ x 14 x 1″ H.W.H. #3 SELF TAPPING WITH NEOPRENE WASHER
BRACKETS	PART #HPN034 (UNIVERSAL) CHANNEL CLAMPS WITH STAINLESS STEEL STRAPPING

OTHER BRANDS OF MOUNTING HARDWARE ARE ACCEPTABLE, BASED UPON THE DEPARTMENT'S APPROVAL AND COMPATIBILITY WITH THE CHANNEL/BRACKET OF THE ABOVE PRODUCT.

Upper Case To Lower Case
Spacing Chart 8-6 Inch Series "C & D"

FIRST LETTER	SECOND LETTER: a c d e g o q		b h i k l m n p r u		f w		j		s t		v y		x		z	
SERIES	C	D	C	D	C	D	C	D	C	D	C	D	C	D	C	D
A W X	1^{2}	1^{4}	1^{4}	1^{5}	1^{2}	1^{4}	0^{6}	1^{0}	1^{1}	1^{4}	0^{6}	1^{0}	1^{1}	1^{2}	1^{2}	1^{4}
B	1^{4}	1^{5}	2^{0}	2^{1}	1^{4}	1^{5}	1^{1}	1^{2}	1^{4}	1^{5}	1^{2}	1^{4}	1^{2}	1^{4}	1^{6}	1^{7}
C E G	1^{4}	1^{5}	2^{0}	2^{1}	1^{2}	1^{4}	0^{6}	1^{0}	1^{2}	1^{4}	1^{2}	1^{4}	1^{4}	1^{5}	1^{4}	1^{5}
D O Q R	1^{4}	1^{5}	2^{0}	2^{1}	1^{4}	1^{5}	0^{6}	1^{0}	1^{2}	1^{4}	1^{2}	1^{4}	1^{4}	1^{5}	1^{4}	1^{5}
F	0^{5}	0^{6}	1^{4}	1^{5}	0^{6}	1^{0}	0^{5}	0^{6}	0^{6}	1^{0}	0^{6}	1^{0}	0^{6}	1^{0}	1^{1}	1^{2}
H I M N	2^{0}	2^{1}	2^{2}	2^{4}	2^{0}	2^{1}	1^{4}	1^{5}	1^{6}	1^{7}	1^{6}	1^{7}	2^{0}	2^{1}	2^{0}	2^{1}
J U	2^{0}	2^{1}	2^{0}	2^{1}	1^{6}	1^{7}	1^{4}	1^{5}	1^{6}	1^{7}	1^{6}	1^{7}	1^{6}	1^{7}	2^{0}	2^{1}
K L	1^{1}	1^{2}	1^{6}	1^{7}	1^{1}	1^{2}	0^{5}	0^{6}	1^{1}	1^{2}	1^{1}	1^{2}	1^{1}	1^{2}	1^{2}	1^{4}
P	1^{2}	1^{4}	1^{4}	1^{5}	1^{2}	1^{4}	0^{5}	0^{6}	1^{1}	1^{2}	1^{1}	1^{2}	1^{2}	1^{4}	1^{2}	1^{4}
S	1^{2}	1^{4}	1^{6}	1^{7}	1^{2}	1^{4}	0^{6}	1^{0}	1^{2}	1^{4}	1^{2}	1^{4}	1^{2}	1^{4}	1^{2}	1^{4}
T	1^{1}	1^{2}	1^{6}	1^{7}	0^{6}	1^{0}	0^{6}	1^{0}	1^{1}	1^{2}	1^{1}	1^{2}	1^{1}	1^{2}	1^{2}	1^{4}
V	0^{6}	1^{0}	1^{4}	1^{5}	1^{1}	1^{2}	0^{6}	1^{0}	1^{2}	1^{4}	1^{2}	1^{4}	1^{2}	1^{4}	1^{2}	1^{4}
Y	0^{5}	0^{6}	1^{4}	1^{5}	0^{6}	1^{0}	0^{5}	0^{6}	0^{5}	0^{7}	0^{5}	0^{6}	0^{6}	1^{0}	1^{1}	1^{2}
Z	1^{6}	1^{7}	2^{2}	2^{4}	1^{6}	1^{7}	1^{2}	1^{4}	1^{6}	1^{7}	1^{6}	1^{7}	1^{6}	1^{7}	2^{0}	2^{1}

Lower Case To Lower Case
Spacing Chart 6 Inch Series "C & D"

FIRST LETTER	SECOND LETTER: a c d e g o q		b h i k l m n p r u		f w		j		s t		v y		x		z	
SERIES	C	D	C	D	C	D	C	D	C	D	C	D	C	D	C	D
a d h g i j l m n q u	1^{6}	1^{7}	2^{2}	2^{4}	1^{6}	1^{7}	1^{2}	1^{4}	1^{4}	1^{5}	1^{4}	1^{5}	1^{6}	1^{7}	1^{6}	1^{7}
b f k o p s	1^{2}	1^{4}	1^{6}	1^{7}	1^{1}	1^{2}	0^{5}	0^{6}	1^{1}	1^{2}	1^{1}	1^{2}	1^{2}	1^{4}	1^{2}	1^{4}
c e	1^{2}	1^{4}	1^{6}	1^{7}	1^{2}	1^{4}	0^{6}	1^{0}	1^{2}	1^{4}	1^{2}	1^{4}	1^{2}	1^{4}	1^{2}	1^{4}
r	0^{6}	1^{0}	1^{2}	1^{4}	0^{6}	1^{0}	0^{3}	0^{3}	0^{5}	0^{6}	0^{5}	0^{6}	0^{6}	1^{0}	0^{6}	1^{0}
t z	1^{2}	1^{4}	1^{6}	1^{7}	1^{2}	1^{4}	0^{6}	1^{0}	1^{1}	1^{2}	1^{1}	1^{2}	1^{2}	1^{4}	1^{2}	1^{4}
v y	1^{1}	1^{2}	1^{4}	1^{5}	1^{1}	1^{2}	0^{5}	0^{6}	0^{6}	1^{0}	0^{6}	1^{0}	1^{1}	1^{2}	1^{1}	1^{2}
w	1^{1}	1^{2}	1^{4}	1^{5}	1^{1}	1^{2}	0^{5}	0^{6}	1^{1}	1^{2}	1^{1}	1^{2}	1^{1}	1^{2}	1^{2}	1^{4}
x	1^{2}	1^{4}	1^{6}	1^{7}	1^{1}	1^{2}	0^{5}	0^{6}	1^{1}	1^{2}	1^{1}	1^{2}	1^{1}	1^{2}	1^{2}	1^{4}

Number To Number
Spacing Chart 8 Inch Series "C & D"

FIRST NUMBER	SECOND NUMBER: 0		1		2		3		4		5		6		7		8		9	
SERIES	C	D	C	D	C	D	C	D	C	D	C	D	C	D	C	D	C	D	C	D
0 9	1^{6}	1^{7}	1^{6}	1^{7}	1^{4}	1^{5}	1^{2}	1^{4}	1^{4}	1^{5}	1^{4}	1^{5}	1^{6}	1^{7}	1^{2}	1^{4}	1^{6}	1^{7}	1^{6}	1^{7}
1	2^{0}	2^{1}	2^{0}	2^{1}	2^{0}	2^{1}	1^{6}	1^{7}	1^{4}	1^{5}	2^{0}	2^{1}	2^{0}	2^{1}	1^{4}	1^{5}	2^{0}	2^{1}	2^{0}	2^{1}
2 3 4	1^{4}	1^{5}	1^{4}	1^{5}	1^{4}	1^{5}	1^{2}	1^{4}	1^{2}	1^{4}	1^{4}	1^{5}	1^{4}	1^{5}	1^{1}	1^{2}	1^{6}	1^{7}	1^{4}	1^{5}
5	1^{4}	1^{5}	1^{4}	1^{5}	1^{4}	1^{5}	1^{1}	1^{2}	1^{1}	1^{2}	1^{4}	1^{5}	1^{4}	1^{5}	1^{1}	1^{2}	1^{4}	1^{5}	1^{4}	1^{5}
6	1^{6}	1^{7}	1^{4}	1^{5}	1^{4}	1^{5}	1^{2}	1^{5}	1^{2}	1^{4}	1^{4}	1^{5}	1^{4}	1^{5}	1^{1}	1^{2}	1^{4}	1^{5}	1^{4}	1^{5}
7	1^{2}	1^{4}	1^{2}	1^{4}	1^{4}	1^{5}	1^{2}	1^{5}	0^{5}	0^{6}	1^{2}	1^{4}	1^{4}	1^{5}	1^{1}	1^{2}	1^{4}	1^{5}	1^{2}	1^{4}
8	1^{6}	1^{7}	1^{6}	1^{7}	1^{4}	1^{5}	1^{2}	1^{5}	1^{2}	1^{4}	1^{4}	1^{5}	1^{6}	1^{7}	1^{2}	1^{4}	1^{6}	1^{7}	1^{4}	1^{5}

EXAMPLE, $2^{(3)}$ DENOTES $\frac{3''}{8}$

UPPER AND LOWER CASE
LETTER WIDTHS

LETTERS	6 INCH UPPER CASE LETTERS SERIES C	6 INCH UPPER CASE LETTERS SERIES D	8 INCH UPPER CASE LETTERS SERIES C	8 INCH UPPER CASE LETTERS SERIES D	LETTERS	6 INCH LOWER CASE LETTERS SERIES C	6 INCH LOWER CASE LETTERS SERIES D
A	3^{6}	5^{0}	5^{0}	6^{5}	a	3^{5}	4^{2}
B	3^{2}	4^{0}	4^{3}	5^{3}	b	3^{5}	4^{2}
C	3^{2}	4^{0}	4^{3}	5^{3}	c	3^{5}	4^{1}
D	3^{2}	4^{0}	4^{3}	5^{3}	d	3^{5}	4^{2}
E	3^{0}	3^{5}	4^{0}	4^{7}	e	3^{5}	4^{2}
F	3^{0}	3^{5}	4^{0}	4^{7}	f	2^{3}	2^{6}
G	3^{2}	4^{0}	4^{3}	5^{3}	g	3^{5}	4^{2}
H	3^{2}	4^{0}	4^{3}	5^{3}	h	3^{5}	4^{2}
I	0^{7}	0^{7}	1^{1}	1^{2}	i	1^{1}	1^{1}
J	3^{0}	3^{6}	4^{0}	5^{0}	j	2^{0}	2^{2}
K	3^{2}	4^{1}	4^{3}	5^{4}	k	3^{5}	4^{2}
L	3^{0}	3^{5}	4^{0}	4^{7}	l	1^{1}	1^{1}
M	3^{7}	4^{5}	5^{1}	6^{1}	m	6^{0}	7^{0}
N	3^{2}	4^{0}	4^{3}	5^{3}	n	3^{5}	4^{2}
O	3^{4}	4^{2}	4^{5}	5^{5}	o	3^{6}	4^{3}
P	3^{2}	4^{0}	4^{3}	5^{3}	p	3^{5}	4^{2}
Q	3^{4}	4^{2}	4^{5}	5^{5}	q	3^{5}	4^{2}
R	3^{2}	4^{0}	4^{3}	5^{3}	r	2^{6}	3^{2}
S	3^{2}	4^{0}	4^{3}	5^{3}	s	3^{6}	4^{2}
T	3^{0}	3^{5}	4^{0}	4^{7}	t	2^{7}	3^{2}
U	3^{2}	4^{0}	4^{3}	5^{3}	u	3^{5}	4^{2}
V	3^{5}	4^{4}	4^{7}	6^{0}	v	4^{2}	4^{7}
W	4^{4}	5^{2}	6^{0}	7^{0}	w	5^{5}	6^{4}
X	3^{4}	4^{0}	4^{5}	5^{3}	x	4^{4}	5^{1}
Y	3^{6}	5^{0}	5^{0}	6^{6}	y	4^{6}	5^{3}
Z	3^{2}	4^{0}	4^{3}	5^{3}	z	3^{6}	4^{3}

NUMBER	6 INCH SERIES C	6 INCH SERIES D	8 INCH SERIES C	8 INCH SERIES D
1	1^{2}	1^{4}	1^{5}	2^{0}
2	3^{2}	4^{0}	4^{3}	5^{3}
3	3^{2}	4^{0}	4^{3}	5^{3}
4	3^{5}	4^{3}	4^{7}	5^{7}
5	3^{2}	4^{0}	4^{3}	5^{3}
6	3^{2}	4^{0}	4^{3}	5^{3}
7	3^{2}	4^{0}	4^{3}	5^{3}
8	3^{2}	4^{0}	4^{3}	5^{3}
9	3^{2}	4^{0}	4^{3}	5^{3}
0	3^{4}	4^{2}	4^{5}	5^{5}

FILE NAME = c:\pw_work\pwidot\pociechal\d0113528\95th104th.dgn	USER NAME = pociechal	DESIGNED - DAG/BCK	REVISED - DAG 10/28/09
		DRAWN - BCK	REVISED -
	PLOT SCALE = 50.000 ′ / in.	CHECKED - DAG/DAD	REVISED -
	PLOT DATE = 1/17/2012	DATE - 03-15-09	REVISED -

STATE OF ILLINOIS
DEPARTMENT OF TRANSPORTATION

DISTRICT ONE
MAST ARM MOUNTED STREET NAME SIGNS

SCALE: NONE | SHEET NO. 1 OF 1 SHEETS | STA. | TO STA.

F.A.U RTE.	SECTION	COUNTY	TOTAL SHEETS	SHEET NO.
1566	29R-N-1	COOK	120	48
	TS-02	CONTRACT NO. 62377		
FED. ROAD DIST. NO. 1	ILLINOIS	FED. AID PROJECT		

WESTBOUND 95TH STREET DETOUR

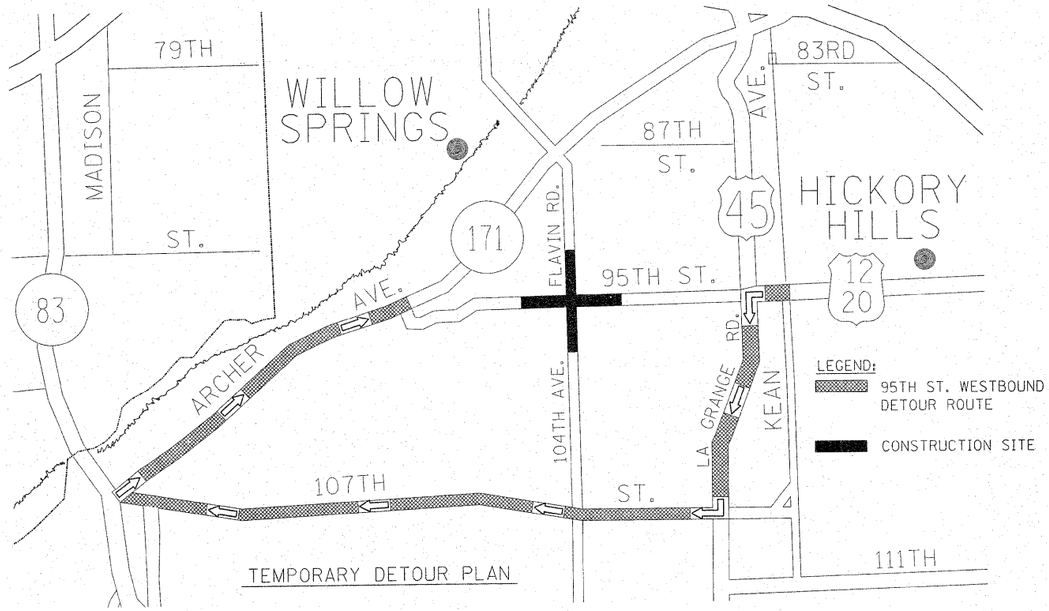

TEMPORARY DETOUR PLAN

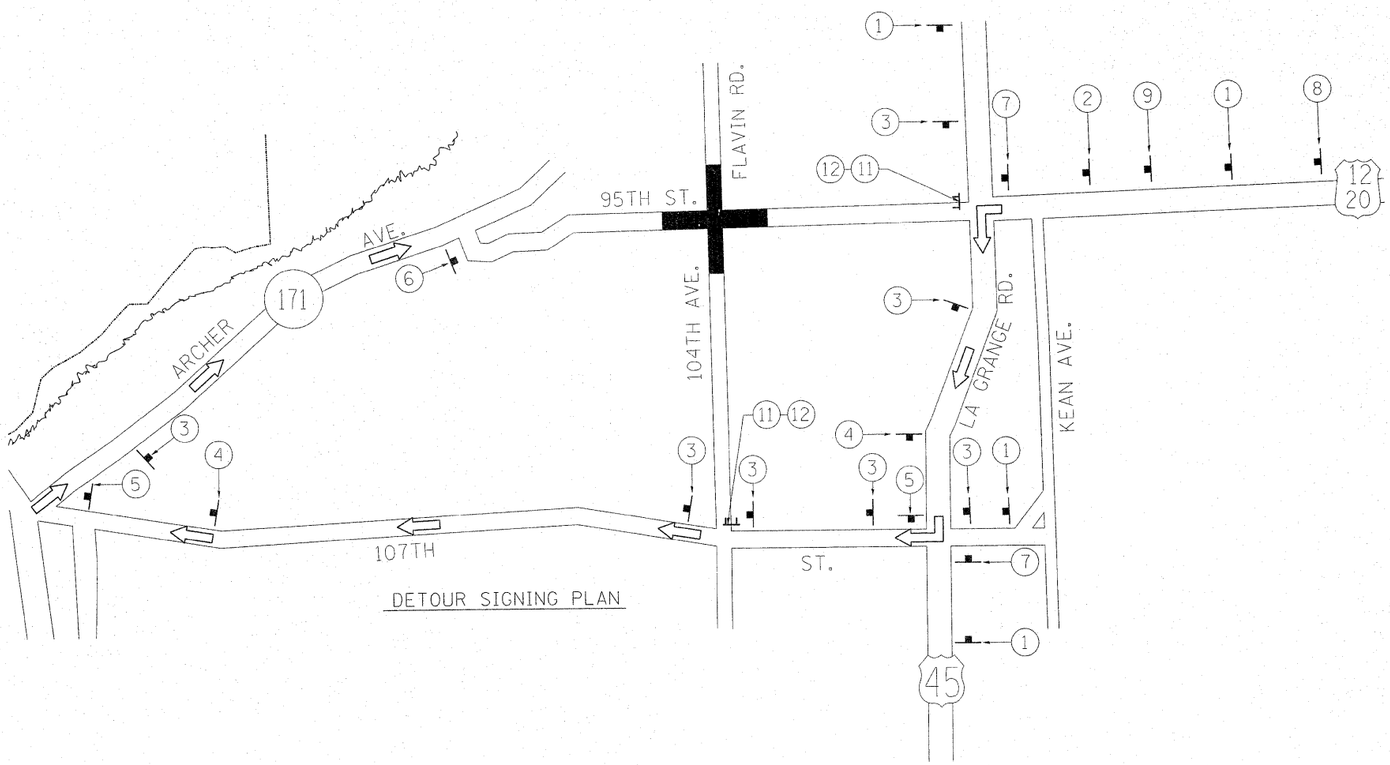

DETOUR SIGNING PLAN

SIGN LEGEND

1 — DETOUR AHEAD — W20 - 3 (0) 48X48
WEST — M3 - 4 (0) 24X12
95th ST. — W17-I100 (0) VAR. X 12"

2 — DETOUR — M4 - 8 (0) 24X12
WEST — M3 - 4 (0) 24X12
95th ST. — W17-I100 (0) VAR. X 12"
M5 - 1L (0) 21X15

3 — DETOUR — M4 - 8 (0) 24X12
WEST — M3 - 4 (0) 24X12
95th ST. — W17-I100 (0) VAR. X 12"
M6 - 3 21X15

4 — DETOUR — M4 - 8 (0) 24X12
WEST — M3 - 4 (0) 24X12
95th ST. — W17-I100 (0) VAR. X 12"
M5 - 1R (0) 21X15

5 — DETOUR — M4 - 8 (0) 24X12
WEST — M3 - 4 (0) 24X12
95th ST. — W17-I100 (0) VAR. X 12"
M6 - 1R (0) 21X15

6 — END DETOUR — M4 - 8a 24X18

7 — DETOUR — M4 - 8 (0) 24X12
WEST — M3 - 4 (0) 24X12
95th ST. — W17-I100 (0) VAR. X 12"
M6 - 1L (0) 21X15

8 — ROAD CLOSED AHEAD — W20 - 3 (0) 48X48

9 — ROAD CLOSED 500 FT — W20 - 3 (0) 48X48

10 — ROAD CLOSED — R11-2 MOUNTED ABOVE A TYPE III BARRICADE

11 — ROAD CLOSED TO THRU TRAFFIC — R11-4 MOUNTED ABOVE A TYPE III BARRICADE

12 — DETOUR — M4-10L MOUNTED ABOVE A TYPE III BARRICADE

FILE NAME = c:\pw_work\pwidot\steedpa\d0159915\P144499-Design.dgn	USER NAME = steedpa	DESIGNED -	REVISED -
		DRAWN -	REVISED -
	PLOT SCALE = 50.7684 ' / IN.	CHECKED -	REVISED -
	PLOT DATE = 2/14/2011	DATE -	REVISED -

STATE OF ILLINOIS
DEPARTMENT OF TRANSPORTATION

DETOUR PLAN
95th STREET @ 104th AVENUE/ FLAVIN ROAD

SCALE: | SHEET NO. OF SHEETS | STA. TO STA.

F.A.U. RTE.	SECTION	COUNTY	TOTAL SHEETS	SHEET NO.
1566	29 R-N-1	COOK	120	49

CONTRACT NO. 62377

ILLINOIS FED. AID PROJECT

NORTHBOUND 104TH AVE./ FLAVIN RD. DETOUR

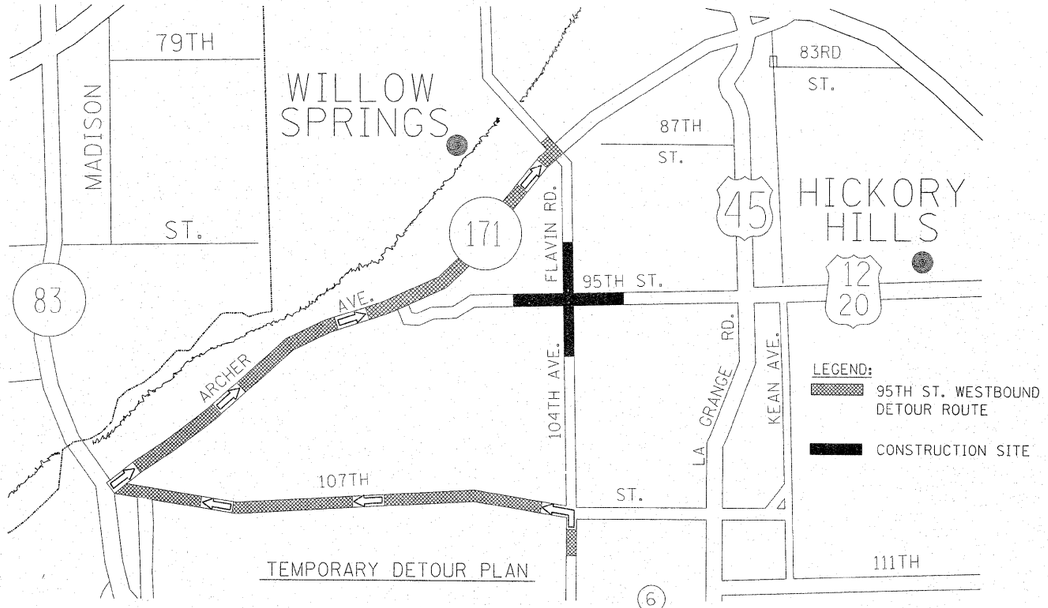

TEMPORARY DETOUR PLAN

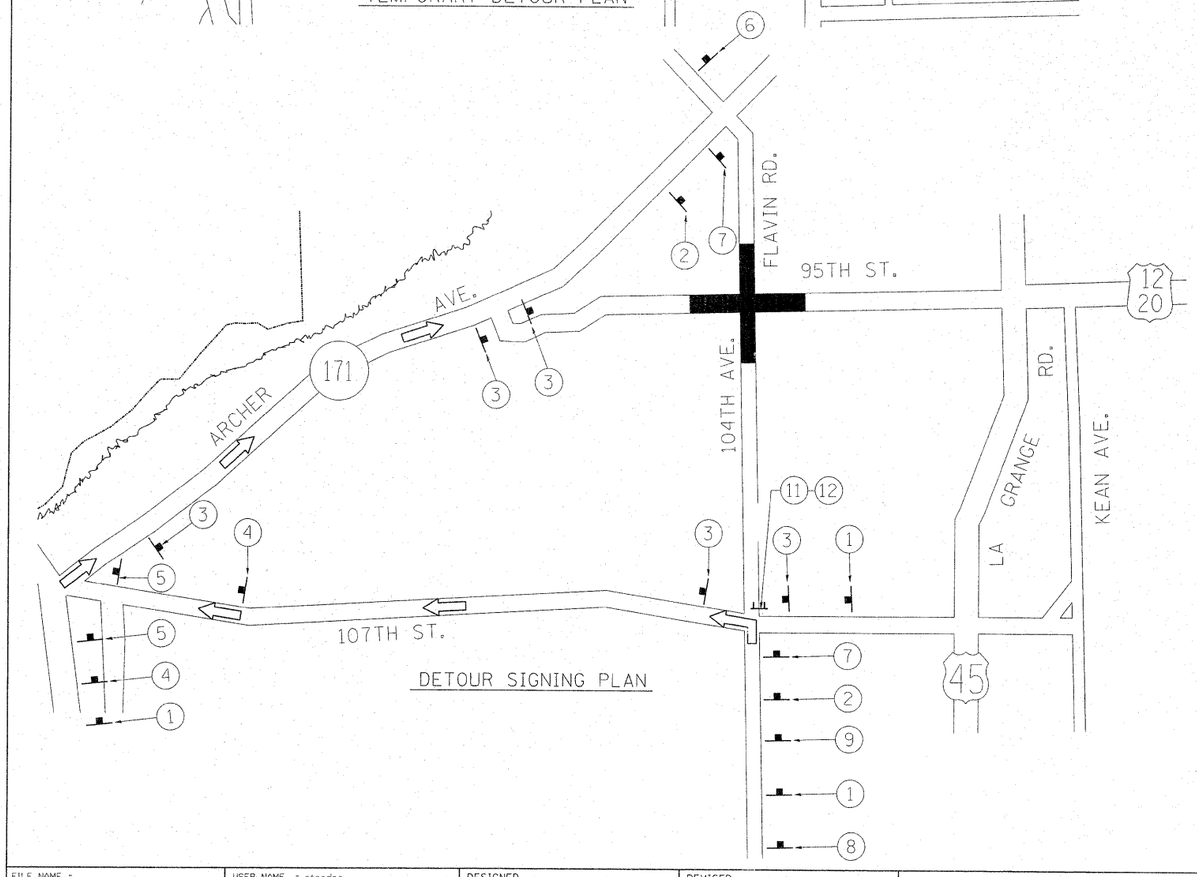

DETOUR SIGNING PLAN

SIGN LEGEND

1 — DETOUR AHEAD — W20 - 3 (O) 48X48
NORTH — M3 - 1 (O) 24X12
104th AVE. — W17-I100 (O) VAR. X 12"

2 — DETOUR — M4 - 8 (O) 24X12
NORTH — M3 - 1 (O) 24X12
104th AVE. — W17-I100 (O) VAR. X 12"
M5 - 1L (O) 21X15

3 — DETOUR — M4 - 8 (O) 24X12
NORTH — M3 - 1 (O) 24X12
104th AVE. — W17-I100 (O) VAR. X 12"
M6 - 3 21X15

4 — DETOUR — M4 - 8 (O) 24X12
NORTH — M3 - 1 (O) 24X12
104th AVE. — W17-I100 (O) VAR. X 12"
M5 - 1R (O) 21X15

5 — DETOUR — M4 - 8 (O) 24X12
NORTH — M3 - 1 (O) 24X12
104th AVE. — W17-I100 (O) VAR. X 12"
M6 - 1R (O) 21X15

6 — END DETOUR — M4 - 8a 24X18

7 — DETOUR — M4 - 8 (O) 24X12
NORTH — M3 - 1 (O) 24X12
104th AVE. — W17-I100 (O) VAR. X 12"
M6 - 1L (O) 21X15

8 — ROAD CLOSED AHEAD — W20 - 3 (O) 48X48

9 — ROAD CLOSED 500 FT — W20 - 3 (O) 48X48

10 — ROAD CLOSED — R11-2 MOUNTED ABOVE A TYPE III BARRICADE

11 — ROAD CLOSED TO THRU TRAFFIC — R11-4 MOUNTED ABOVE A TYPE III BARRICADE

12 — DETOUR — M4-10L MOUNTED ABOVE A TYPE III BARRICADE

FILE NAME = c:\pw_work\pwidot\steedpa\d0159915\P144499-Design.dgn	USER NAME = steedpa	DESIGNED -	REVISED -
		DRAWN -	REVISED -
	PLOT SCALE = 50.7684 ' / IN.	CHECKED -	REVISED -
	PLOT DATE = 2/14/2011	DATE -	REVISED -

STATE OF ILLINOIS
DEPARTMENT OF TRANSPORTATION

DETOUR PLAN
95th STREET @ 104th AVENUE/ FLAVIN ROAD

SCALE: | SHEET NO. OF SHEETS | STA. TO STA.

F.A.U. RTE.	SECTION	COUNTY	TOTAL SHEETS	SHEET NO.
1566	29 R-N-1	COOK	120	50

CONTRACT NO. 62377
ILLINOIS FED. AID PROJECT

F.A.U. RTE.	SECTION	COUNTY	TOTAL SHEETS	SHEET NO.
1566	29 R-N-1	COOK	120	51
STA.		TO STA.		
FED. ROAD DIST. NO.	ILLINOIS	FED. AID PROJECT		

SHEET S1 OF S6

D-91-026-02 CONTRACT NO. 62377

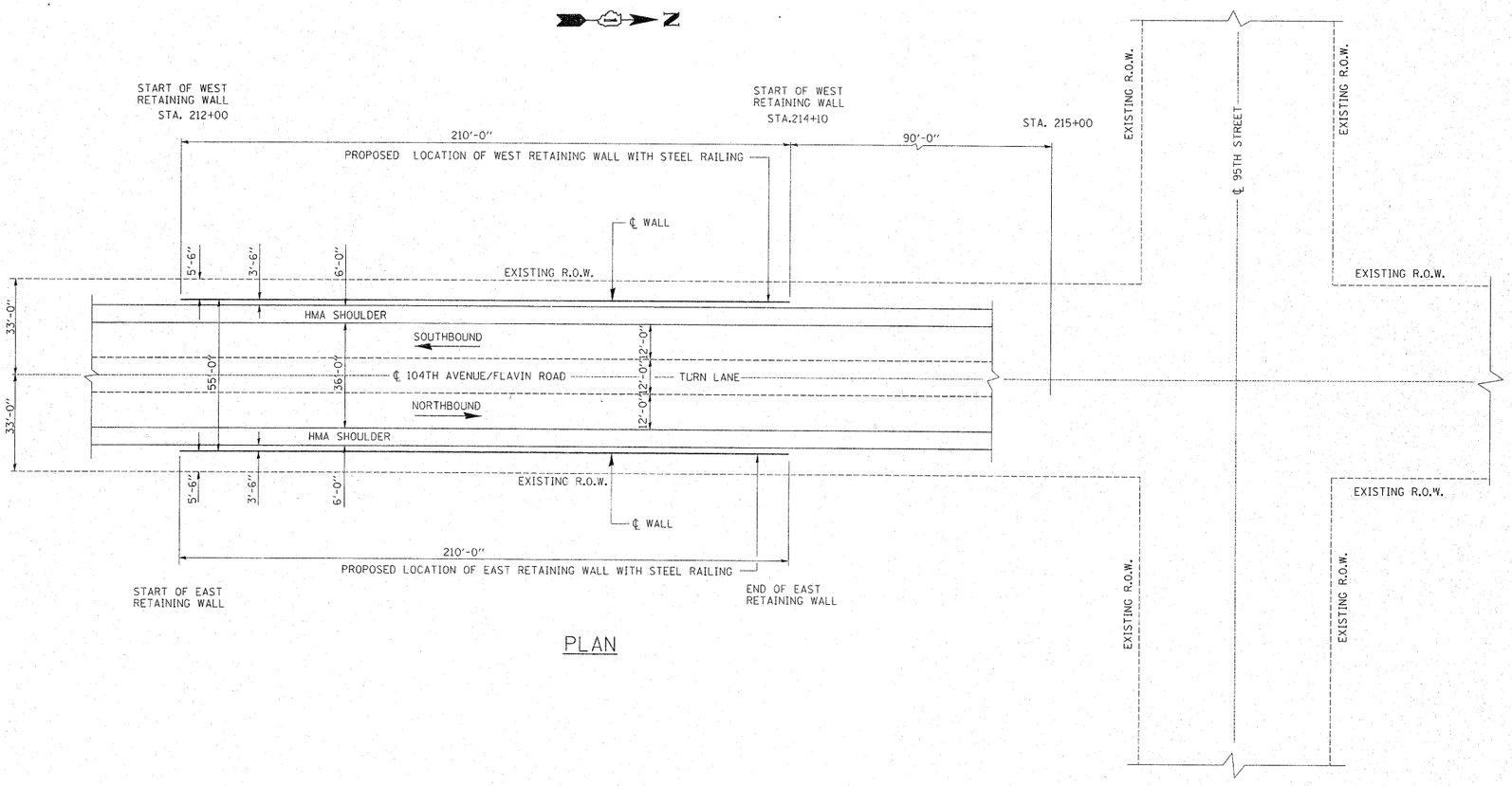

PLAN

SCOPE OF WORK:

PERMANENT STEEL SHEET PILING RETAINING WALL
INSTALL GUARDRAIL

DESIGN SPECIFICATIONS:

2002 AASHTO

LOADING:

EQUIVALENT FLUID LATERAL SOIL PRESSURE = 85 lbs/ft^2

DESIGN STRESSES:

f'c = 3500 psi
fy = 60,000 psi

GENERAL NOTES:

PLAN DIMENSIONS AND DETAILS RELATIVE TO EXISTING PLANS ARE SUBJECT TO NOMINAL CONSTRUCTION VARIATIONS. THE CONTRACTOR SHALL FIELD VERIFY EXISTING DIMENSIONS AND DETAILS AFFECTIVE NEW CONSTRUCTION AND MAKE NECESSARY APPROVED ADJUSTMENTS PRIOR TO CONSTRUCTION OR ORDERING OF MATERIALS. SUCH VARIATIONS SHALL NOT BE CAUSE FOR ADDITIONAL COMPENSATION FOR A CHANGE IN SCOPE OF THE WORK, HOWEVER, THE CONTRACTOR WILL BE PAID FOR THE QUANTITY ACTUALLY FURNISHED BASED AT THE UNIT PRICE BID FOR THE WORK.

ELEVATIONS ARE IN FEET.

EXPOSED CONCRETE EDGES SHALL BE CHAMFERED ¾" EXCEPT AS NOTED.

REINFORCEMENT BARS SHALL CONFORM TO THE REQUIREMENTS OF ASTM A 706 Gr 60 SEE SPECIAL PROVISIONS.

EFFECTIVE SECTION MODULUS - 22 in^3/Ft. min.

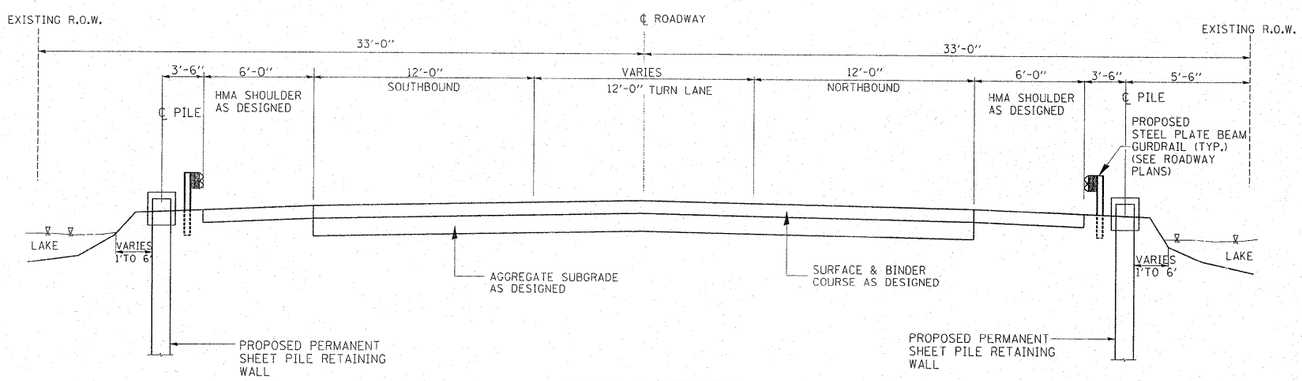

TYPICAL SECTION
(LOOKING NORTH)

TOTAL BILL OF MATERIALS

ITEM	UNIT	QUANTITY
REINFORCEMENT BARS, (EPOXY COATED)	POUND	3600
CONCRETE STRUCTURES	CU. YDS	40.8
PERMANENT STEEL SHEET PILING	SQ. FT.	7460
STUD SHEAR CONNECTORS	EACH	118

REVISIONS	
NAME	DATE

ILLINOIS DEPARTMENT OF TRANSPORTATION

95TH STREET
AT 104TH AVENUE/FLAVIN ROAD
WEST AND EAST
PROPOSED
RETAINING WALLS

SCALE: VERT. HORIZ.

DRAWN BY : MVT
CHECKED BY: RTB

2/15/2011
c:\pw_work\pwidot\steedpab\d0101671\retainingwalls.dgn

F.A.U. RTE.	SECTION	COUNTY	TOTAL SHEETS	SHEET NO.
1566	29 R-N-1	COOK	120	52
STA.		TO STA.		
FED. ROAD DIST. NO. 1	ILLINOIS	FED. AID PROJECT		

SHEET S2 OF S6

D-91-026-02 CONTRACT NO. 62377

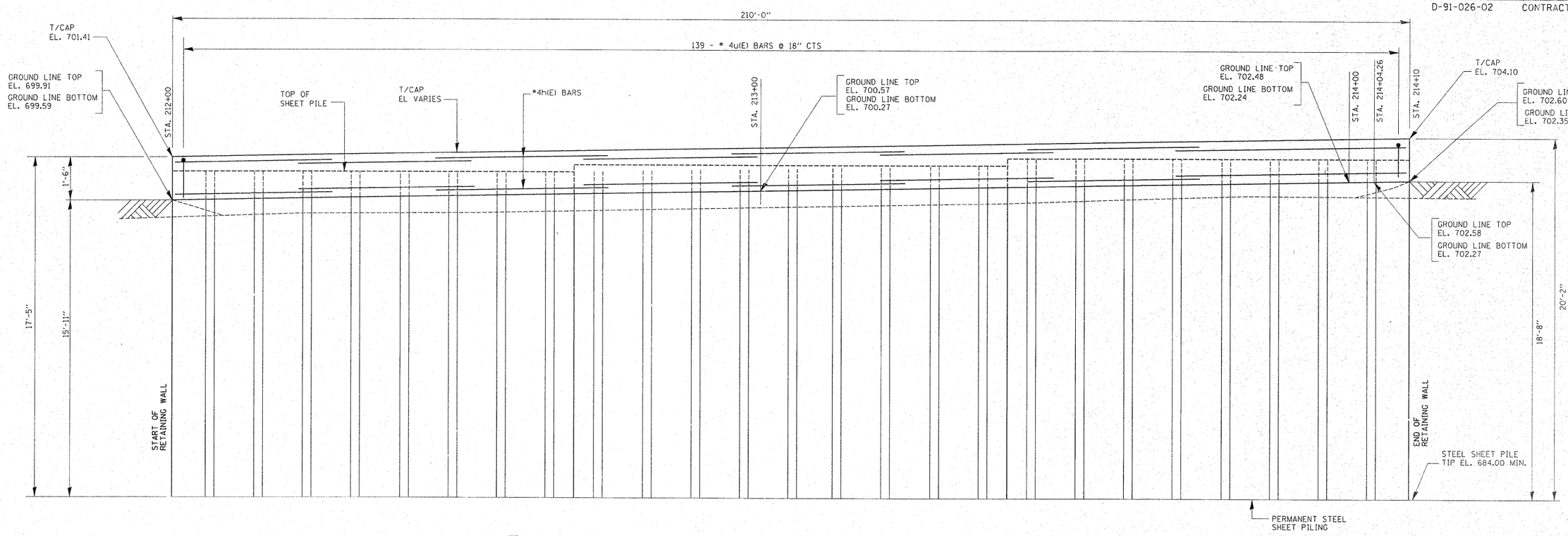

ELEVATION - EAST RETAINING WALL

(LOOKING WEST)

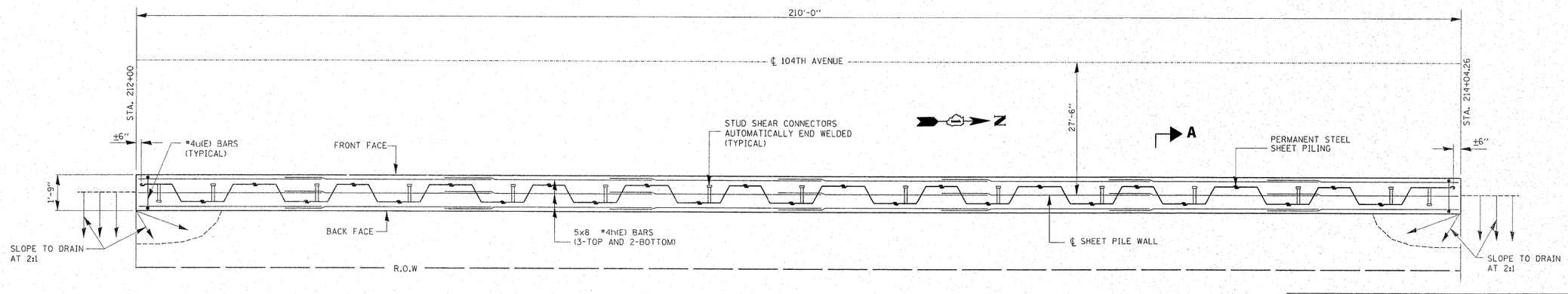

PLAN - EAST RETAINING WALL

A

REVISIONS	
NAME	DATE

ILLINOIS DEPARTMENT OF TRANSPORTATION

95TH STREET
AT 104TH AVENUE/FLAVIN ROAD
EAST RETAINING WALL
GENERAL PLAN AND ELEVATION

SCALE: NONE

DRAWN BY: MVT

CHECKED BY: RTB

2/15/2011
c:\pw_work\pwidot\steedpal\d1016711\r_retainingwalls.dgn

F.A.U. RTE.	SECTION	COUNTY	TOTAL SHEETS	SHEET NO.
1566	29 R-N-1	COOK	120	53

FED. ROAD DIST. NO. 1 | ILLINOIS | FED. AID PROJECT

D-91-026-02 CONTRACT NO. 62377

SHEET S3 OF S6

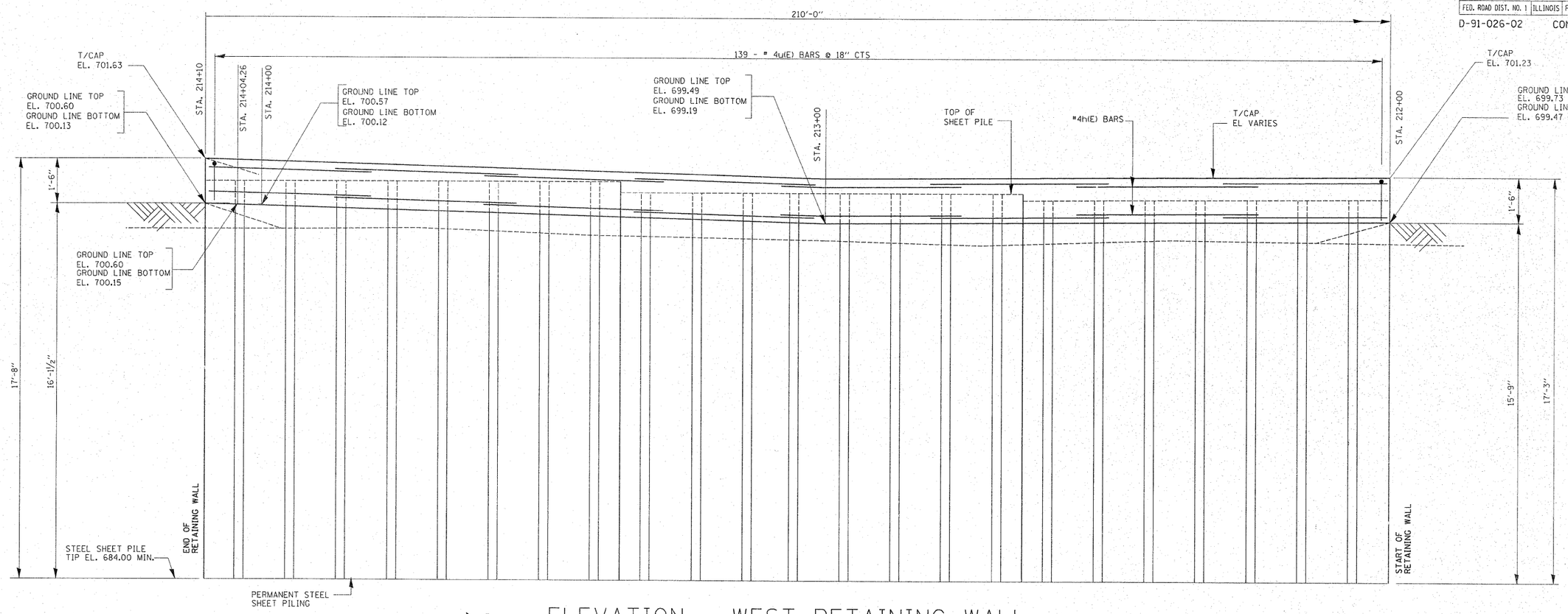

ELEVATION - WEST RETAINING WALL

(LOOKING EAST)

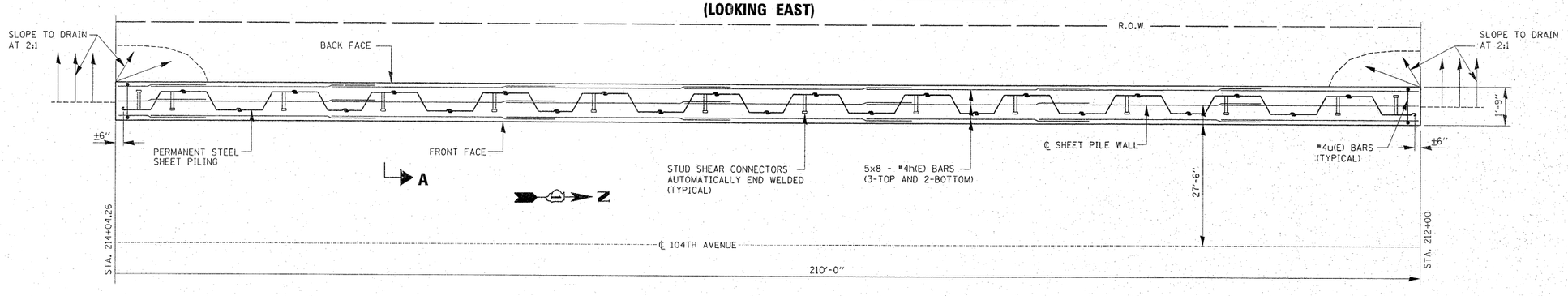

PLAN - WEST RETAINING WALL

NOTE:

FOR SECTION A-A SEE SHEET S-4

ALL EDGES SHALL HAVE 3/4" CHAMFER

REVISIONS	
NAME	DATE

ILLINOIS DEPARTMENT OF TRANSPORTATION

95TH STREET
AT 104TH AVENUE/FLAVIN ROAD
WEST RETAINING WALL
GENERAL PLAN AND ELEVATION

SCALE: NONE | DRAWN BY: MVT

DATE: MARCH, 2006 | CHECKED BY: RTB

2/15/2011
c:\pw_work\pwidot\steedpal\d1016718retainingwalls.dgn

F.A.U. RTE.	SECTION	COUNTY	TOTAL SHEETS	SHEET NO.
1566	29 R-N-1	COOK	120	54
STA.		TO STA.		
FED. ROAD DIST. NO.	ILLINOIS	FED. AID PROJECT		

SHEET S4 OF S6

D-91-026-02 CONTRACT NO. 62377

BILL OF MATERIALS
EAST RETAINING WALL

BAR	NO.	SIZE	LENGTH	SHAPE
h1(E)	40	#4	27'-9"	———
u(E)	422	#4	3'-9"	⊔
REINFORCEMENT BARS, EPOXY COATED			POUND	1800
CONCRETE STRUCTURES			CU. YDS	20.4
PERMANENENT STEEL SHEET PILING			SQ. FT.	3900
STUD SHEAR CONNECTORS			EACH	59

BILL OF MATERIALS
WEST RETAINING WALL

BAR	NO.	SIZE	LENGTH	SHAPE
h1(E)	40	#4	27'-9"	———
u(E)	422	#4	3'-9"	⊔
REINFORCEMENT BARS, EPOXY COATED			POUND	1800
CONCRETE STRUCTURES			CU. YDS	20.4
PERMANENT STEEL SHEET PILING			SQ. FT.	3560
STUD SHEAR CONNECTORS			EACH	57

REINFORCEMENT BARS DESIGNATED (E) SHALL BE EPOXY COATED.

BARS INDICATED 2x8-#4h(E) BARS INDICATES 2 LINES OF BARS WITH 8 LENGTHS PER LINE.

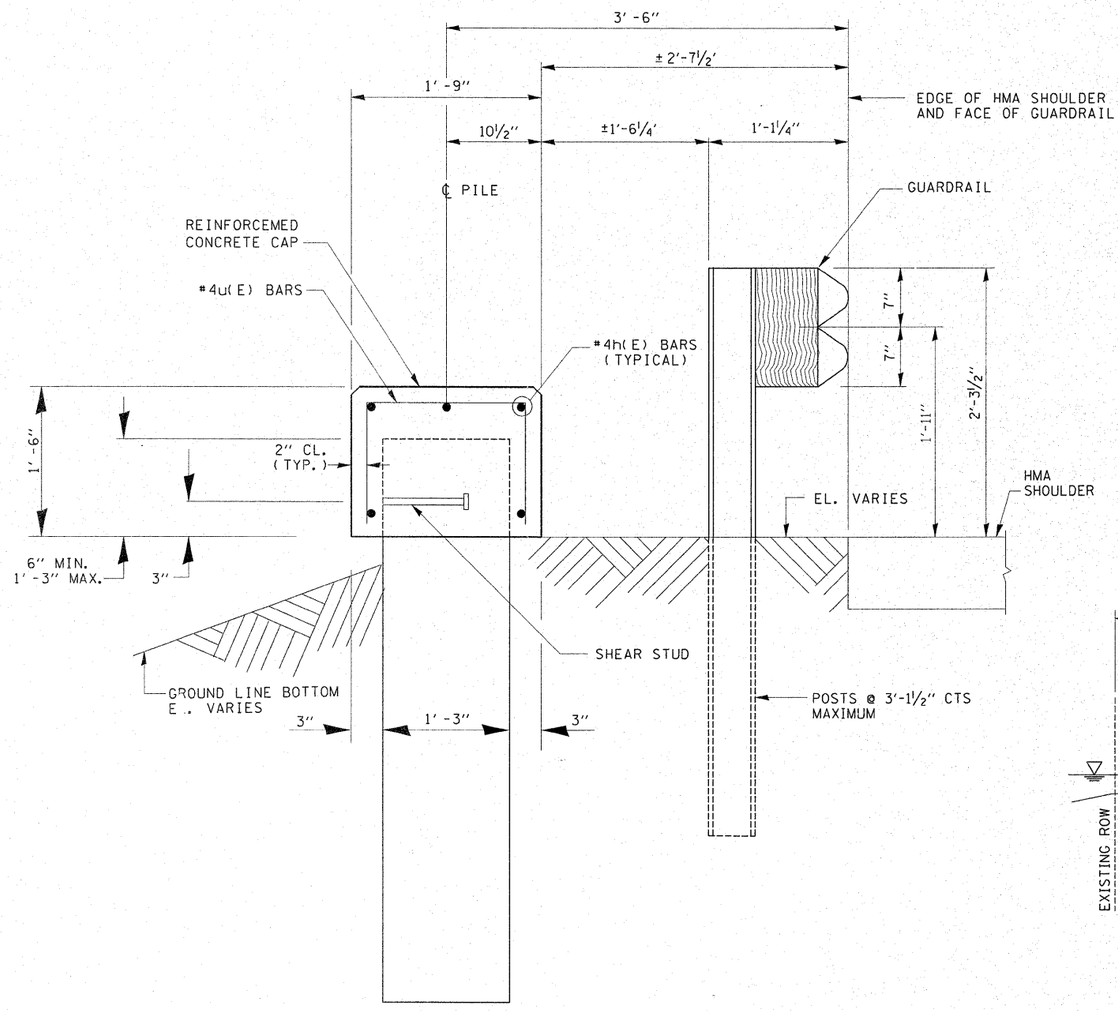

STEEL SHEET PILE SECTION A-A

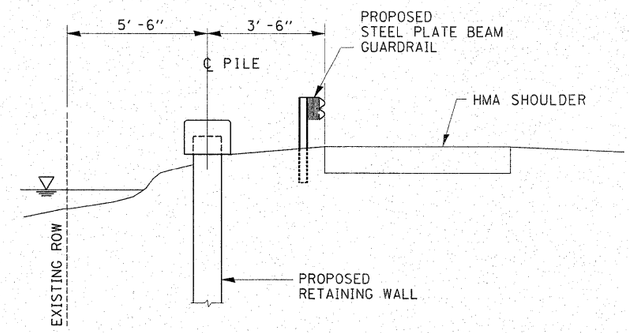

TYPICAL DETAIL
PROPOSED RETAINING WALL

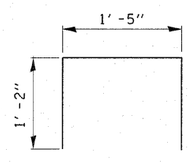

BAR u(E)

BAR LAP TABLE	
SIZE	LENGTH
#4	1'-8"

REVISIONS	
NAME	DATE

ILLINOIS DEPARTMENT OF TRANSPORTATION
95TH STREET
AT 104TH AVENUE/FLAVIN ROAD
NORTHBOUND AND SOUTHBOUND
RETAINING WALLS
SECTIONS AND DETAILS

SCALE: VERT. HORIZ.

DRAWN BY : MVT
CHECKED BY: RTB

2/15/2011
c:\pw_work\pwidot\steedpal\c0101671\retainingwalls.dgn

F.A.U. RTE.	SECTION	COUNTY	TOTAL SHEETS	SHEET NO.
1566	29 R-N-1	COOK	120	55
STA.		TO STA.		
FED. ROAD DIST. NO.	ILLINOIS	FED. AID PROJECT		

SHEET S6 OF S7

D1-91-026-02 CONTRACT NO. 62377

ILLINOIS DEPARTMENT OF TRANSPORTATION
STRUCTURE BORING LOG

Page 1 Of 2
Date 6/14/06

ROUTE FAU 1566 (95th Street) DESCRIPTION Proposed Improvements (Contract No. 62377)
SECTION 29R-N-1 STRUCTURE NO. _____ DRILLED BY KL&ES
COUNTY Cook LOCATION 104th Avenue/Flavin Road and 95th Street (Job # D-91-026-02)

Boring No. NB-1
Station 212+00
Offset 12.5' R
Surface El. +701.97+/- M.S.L.

Surf. Wat. El. _____
Groundwater Elev.:
When Drilling Dry
at Completion Dry
After ___ Hrs

DEPTH	BLOWS	QU TSF	W %
12" CRUSHED STONE SHOULDER COURSE			
FILL: SILTY CLAY, Brown and Gray, Trace Dark Gray, Trace Sand and Gravel, Very Stiff to Stiff to Hard to Stiff to Very Stiff, Moist (A-6)	1 2 3	3.50 S	20.9
(Dry Density = 104.9 pcf)	2 1 2	1.10 B/S	22.8
(Hit rock)	2 1 2	1.75 S	20.1
(Low Recovery --Took auger sample)	2 2 3	1.75 P	20.6
(Dry Density = 105.2 pcf)	2 2 5	1.71 B/S	20.8
(Combined Analysis) (Atterberg Limit)	2 2 4	1.40 B/S	22.4
	2 2 4	1.10 B/S	23.0
(Dry Density = 109.2 pcf)	3 4 5	4.50 B/S	18.0

(Dry Density = 108.6 pcf)

(Little Dark Brown Clay with fibers from 26'3" to 26.5')

(Dry Density = 107.2 pcf)

DEPTH	BLOWS	QU TSF	W %
22.0	3 4 7	1.10 B/S	20.1
23.0			
24.0	3 3 6	1.30 B/S	20.7
25.0			
26.0			
27.0	4 5 6	1.80 S	30.0 13.8
28.0			
29.0	2 3 8	3.40 S	17.4
30.0			
31.0			
32.0	5 7 7	3.00 B/S	18.8
33.0			
34.0	3 4 6	1.30 B/S	22.7
35.0			
36.0			
37.0	4 5 7	1.60 S	23.0
38.0			
39.0	4 6 8	1.10 B/S	19.7
40.0			
41.0			
42.0	5 5 5	1.60	19.7

N=Standard Penetration Test-Blows per foot to drive 2" O.D. Split Spoon Sampler 12" with 140lb hammer falling 30"
(QU)B=Bulge S=Shear P=Penetration Test
Stations, Depths, Offset, and Elevations are in Feet
Offset is from Centerline of Existing Road
SEECO Job No. 7891G-5

ILLINOIS DEPARTMENT OF TRANSPORTATION
STRUCTURE BORING LOG

Page 2 Of 2
Date 6/14/06

ROUTE FAU 1566 (95th Street) DESCRIPTION Proposed Improvements (Contract No. 62377)
SECTION 29R-N-1 STRUCTURE NO. _____ DRILLED BY KL&ES
COUNTY Cook LOCATION 104th Avenue/Flavin Road and 95th Street (Job # D-91-026-02)

Boring No. NB-1
Station 212+00
Offset 12.5' R
Surface El. +701.97+/- M.S.L.

Surf. Wat. El. _____
Groundwater Elev.:
When Drilling Dry
at Completion Dry
After ___ Hrs

DEPTH	BLOWS	QU TSF	W %
	8	S 2.40 B/S	
33" ORGANIC CLAY, Black, Trace Peat and Fibers, Trace Shells, Medium, Wet (A-7-5) (Organic Content = 8.4%)	2 3 3	1.10 B	19.7 62.3
		0.60 B	
CLAY, Gray, Trace Dark Gray, Trace Brown, Trace Sand and Gravel, Stiff, Moist (A-6)	4 4 7	1.20 S 1.60 B/S	19.1
CLAY, Gray, Trace Sand and Gravel, Stiff to Very Stiff to Hard to Very Stiff, Moist (A-6)	4 1 1	1.10 B/S	17.5
	4 6	1.40 B/S	17.8
(Little Coarse Gravel at 54.5'-55.0')	6 8 9	2.20 B 2.60 B/S	17.6
(Little Coarse Gravel at 56.5')	8 10 13	5.80 B/S	16.6
	6 8 11	3.50 B/S 4.70 B/S	19.3
	6 9 14	2.50 B/S 3.30 B	17.7
	12 16 24	3.20 B	10.4

DEPTH	BLOWS	QU TSF	W %
CLAY LOAM, Gray, Very Stiff, Moist (A-6)	6 11 18	2.00 B	11.3
CLAY, Gray, Trace Sand and Gravel, Hard to Very Stiff, Moist (A-6)	7 10 15	4.30 B/S 5.00 B/S	12.9
	9 10 11	2.90 B 4.40 B/S	14.6
(Little Coarse Gravel at 71'-72.5')	13 22 22	2.90 B 3.80 S	16.7
End of Boring @ 72.5 feet			

N=Standard Penetration Test-Blows per foot to drive 2" O.D. Split Spoon Sampler 12" with 140lb hammer falling 30"
(QU)B=Bulge S=Shear P=Penetration Test
Stations, Depths, Offset, and Elevations are in Feet
Offset is from Centerline of Existing Road
SEECO Job No. 7891G-5

ILLINOIS DEPARTMENT OF TRANSPORTATION
STRUCTURE BORING LOG

Page 1 Of 2
Date 6/20/06

ROUTE FAU 1566 (95th Street) DESCRIPTION Proposed Improvements (Contract No. 62377)
SECTION 29R-N-1 STRUCTURE NO. _____ DRILLED BY PD&JT
COUNTY Cook LOCATION 104th Avenue/Flavin Road and 95th Street (Job # D-91-026-02)

Boring No. NB-3
Station 213+65
Offset 12.5' R
Surface El. +703.71+/- M.S.L.

Surf. Wat. El. _____
Groundwater Elev.:
When Drilling 53.5'
at Completion 42.4'
After ___ Hrs

DEPTH	BLOWS	QU TSF	W %
9" CRUSHED STONE BASE COURSE			
1" FILL: CLAY, Black (A-6)			
FILL: CLAY, Brown and Gray, Trace Dark Gray, Trace Sand and Gravel, Very Stiff to Stiff to Hard to Stiff to Medium to Very Soft, Moist to Wet (A-6)	4 4 5	3.20 B/S	21.6
	3 6 7	3.30 B/S	16.8
(Some Black Clay, Trace Fibers at 12.25 feet)	3 4 5	1.90 B/S	21.4
	1 3 4	3.30 B/S	22.2
	2 3 4	1.50 B/S	20.4
(3" Black Clay with Peat Fibers at 13.75')	3 4 4	1.30 B/S	43.4 27.9
	2 3 4	0.70 S	21.7
(Dry Density = 105.5 pcf)	2 2 3	0.40 B	22.4

DEPTH	BLOWS	QU TSF	W %
30" ORGANIC CLAY, Black, Soft, Wet (A-7-5) (Dry Density = 38.6 pcf)	1 2 3	0.23 B 0.25 P	30.7 99.2
PEAT, Dark Brown, Fibrous, Soft, Wet (A-8) (Dry Density = 13.4 pcf)	1 2 3		362.0
18" ORGANIC CLAY, Dark Gray, Trace Fibers, Soft, Wet (A-7-5) (Dry Density = 34.2 pcf)	1 2 3	0.30 B	330.6 77.9
CLAY, Gray, Trace Sand and Gravel, Medium to Hard to Very Stiff to Stiff to Hard to Very Stiff, Moist (A-6)	2 3 4	0.90 B/S	21.4
	4 6 9	2.70 B/S	15.3
(Dry Density = 110.3 pcf)	4 6 10	4.75 B/S	16.1
	4 6 9	3.30 B/S	19.7
	5 7 7	4.00	14.8

N=Standard Penetration Test-Blows per foot to drive 2" O.D. Split Spoon Sampler 12" with 140lb hammer falling 30"
(QU)B=Bulge S=Shear P=Penetration Test
Stations, Depths, Offset, and Elevations are in Feet
Offset is from Centerline of Existing Road
SEECO Job No. 7891G-5

ILLINOIS DEPARTMENT OF TRANSPORTATION
STRUCTURE BORING LOG

Page 1 Of 1
Date 6/14/06

ROUTE FAU 1566 (95th Street) DESCRIPTION Proposed Improvements (Contract No. 62377)
SECTION 29R-N-1 STRUCTURE NO. _____ DRILLED BY KL&ES
COUNTY Cook LOCATION 104th Avenue/Flavin Road and 95th Street (Job # D-91-026-02)

Boring No. NB-4
Station 214+45
Offset 17.5' R
Surface El. +704.94+/- M.S.L.

Surf. Wat. El. _____
Groundwater Elev.:
When Drilling 28.5'
at Completion 13'
After ___ Hrs

DEPTH	BLOWS	QU TSF	W %
8" CRUSHED STONE SHOULDER COURSE			
FILL: CLAY, Brown and Gray, Trace Sand and Gravel, Stiff to Hard, Moist (A-6)	4 3 3	1.10 S	21.9
	9 9 7	4.80 B/S	15.9
FILL: SILTY CLAY, Brown, Gray, Trace to Little Dark Gray, Trace Sand and Gravel, Stiff, Moist (A-6) (Dry Density = 102.4 pcf)	3 3 4	1.60 B/S	21.4
(Atterberg Limit) (Combined Analysis) 18" ORGANIC CLAY LOAM (TOPSOIL), Black, Trace Sand, Medium, Wet (A-7-5) (Organic Content = 5.4%)	3 3 4	0.70 S	43.7
CLAY, Brown, Gray and Dark Gray, Trace Sand, Medium, Moist (A-6)	2 2 4	0.30 B	20.5
CLAY, Brown and Gray, Trace Sand and Gravel, Stiff, Moist (A-6)	3 4 5	1.80 B	26.6
CLAY, Brown and Gray, Trace Sand and Gravel, Very Stiff to Stiff, Moist (A-6) (Trace Brown at 16'-17.5')	2 3 4	3.30 B/S	16.7
(Dry Density = 112.5 pcf)	2 3 4	2.30 B/S	17.8
	4 5 5	2.30	14.7

DEPTH	BLOWS	QU TSF	W %
	6	B/S	
(Hit rock--Low recovery at 26'-27.5')	3 3 5	2.00 B	16.9
	4 5 6	1.75 B/S	15.4
SAND, Gray, Some Gravel, Medium Dense, Saturated (A-1-b) (Grain Size)	5 7 7	1.80 B/S	18.2 15.3
CLAY, Gray, Trace Sand and Gravel, Stiff to Very Stiff, Moist (A-6) (Dry Density = 119.8 pcf)	6 7 9	2.30 B/S	15.4
	6 7 12	3.10 B/S	16.5
SILTY CLAY, Gray, Very Stiff, Trace Sand and Gravel, Moist (A-6)	11 12 13	2.60 S	11.7 11.4
SAND, Gray, Medium Dense, Saturated (A-3) (Grain Size)	7 7 9		32.7 21.0
SAND AND GRAVEL, Gray, Coarse Grained, Medium Dense, Saturated (A-1-b) (Grain Size) (1" of Gray Clay at 40 feet)			
End of Boring @ 40.0 feet			
(Note: The groundwater elevation at the completion of the borehole is not a true water table level as the drillers injected water down the borehole at approximately 37 feet to stabilize the saturated sand layers from heave.--Field Geotechnical Engineer's Observation)			

N=Standard Penetration Test-Blows per foot to drive 2" O.D. Split Spoon Sampler 12" with 140lb hammer falling 30"
(QU)B=Bulge S=Shear P=Penetration Test
Stations, Depths, Offset, and Elevations are in Feet
Offset is from Centerline of Existing Road
SEECO Job No. 7891G-5

ILLINOIS DEPARTMENT OF TRANSPORTATION
STRUCTURE BORING LOG

Page 1 Of 2
Date 6/14/06

ROUTE FAU 1566 (95th Street) DESCRIPTION Proposed Improvements (Contract No. 62377)
SECTION 29R-N-1 STRUCTURE NO. _____ DRILLED BY KL&ES
COUNTY Cook LOCATION 104th Avenue/Flavin Road and 95th Street (Job # D-91-026-02)

Boring No. NB-2
Station 212+85
Offset 12.5' R
Surface El. +702.56+/- M.S.L.

Surf. Wat. El. _____
Groundwater Elev.:
When Drilling Dry
at Completion Dry
After ___ Hrs

DEPTH	BLOWS	QU TSF	W %
10" CRUSHED STONE SHOULDER COURSE			
3" FILL: CLAY LOAM, Dark Gray, Dark Brown and Brown, Trace Gravel, Moist (A-6)	3 3 4	3.30 B/S	17.2 18.0
FILL: CLAY, Brown, Gray and Trace to Little Dark Gray, Very Stiff to Stiff to Hard to Medium, Moist (A-6)	3 2 2	2.73 B/S	21.6
(Some Dark Gray and Black and Fibers at 4.5')	2 3 3	3.40 B/S	17.9
FILL: CLAY LOAM, Brown, Gray, Trace Dark Gray, Trace Sand and Gravel, Medium to Stiff, Moist (A-6) (Atterberg Limit)	3 4 3	1.10 B/S	27.7
	2 2 2	3.20 B/S	21.3
	2 3 4	1.10 S	18.7
FILL: CLAY, Brown, Gray, Trace Dark Gray, Trace Sand and Gravel, Medium, Moist (A-6) 6" ORGANIC CLAY, Dark Gray With Dark Brown Peat, Soft, Wet (A-7-5) 12" PEAT, Dark Brown, Fibrous, Soft, Wet (A-8)	2 3 3	1.60 B/S	18.9
48" ORGANIC SILTY CLAY LOAM, Dark Gray, Very Soft to Medium, Wet (A-7-5) (Organic Content = 4.5%) (Atterberg Limit) (Combined Analysis)	4 3 6	3.50 P	16.6

DEPTH	BLOWS	QU TSF	W %
	4 3 6	2.80 S	26.6
	4 5 7	4.20 B/S	21.2
	3 3 5	1.60 B/S 0.60 B/S	16.2
FILL: CLAY LOAM, Brown, Gray, Trace Dark Gray, Trace Sand and Gravel, Medium to Stiff, Moist (A-6)	3 4 5	1.00 B/S	14.7
	3 3 4	0.70 S	18.1
	4 5 7	1.60 S	20.6
	1 1 1	1.00 B 0.40 B	19.9 62.3 301.5
	1 1 1	0.25 P	53.2
	2 3 3	0.30 B 0.70	55.3

DEPTH	BLOWS	QU TSF	W %
	6	B/S 1.20 B	21.9
(Little Coarse Gravel at 63.5')	2 4 4	0.75 P 1.00 P 0.80 B/S	23.5 20.7 19.9
	3 4 7	1.60 B/S 2.10 B/S	17.4
	7 7	2.90 B/S 3.20 B/S	16.9
	6 7 9	3.10 B/S	17.4
	7 10 13	3.70 B/S	11.3
	7 9 11	3.20 B/S	13.8
	6 7 11	3.20 B/S 5.00 B/S	14.3
(Hit Rock-- Low Recovery at 61' to 62.5')	7 15 24	3.25 P	14.6
	7 8 12	2.90 B/S	18.3
End of Boring @ 65.0 feet			

N=Standard Penetration Test-Blows per foot to drive 2" O.D. Split Spoon Sampler 12" with 140lb hammer falling 30"
(QU)B=Bulge S=Shear P=Penetration Test
Stations, Depths, Offset, and Elevations are in Feet
Offset is from Centerline of Existing Road
SEECO Job No. 7891G-5

ILLINOIS DEPARTMENT OF TRANSPORTATION
STRUCTURE BORING LOG

Page 2 Of 2
Date 6/20/06

ROUTE FAU 1566 (95th Street) DESCRIPTION Proposed Improvements (Contract No. 62377)
SECTION 29R-N-1 STRUCTURE NO. _____ DRILLED BY PD&JT
COUNTY Cook LOCATION 104th Avenue/Flavin Road and 95th Street (Job # D-91-026-02)

Boring No. NB-3
Station 213+65
Offset 12.5' R
Surface El. +703.71+/- M.S.L.

Surf. Wat. El. _____
Groundwater Elev.:
When Drilling 53.5'
at Completion 42.4'
After ___ Hrs

DEPTH	BLOWS	QU TSF	W %
	11	B/S	
(Some Coarse Gravel at 46.5')	5 8 10	4.30 B/S	15.4
	12 9 13	2.50 B	15.0
	4 6 9	2.10 B/S	15.6
	5 7 12	2.60 B/S	15.7
	6 9 12	2.70 B 3.10 B/S	14.9
	7 8 12	1.70 B/S	16.8
	7 11 16	3.20 B/S 4.10 B/S	14.4
	7 16 31	4.10 B 4.50 B/S	14.2 18.2
SILT, Gray, Very Dense, Moist (A-4)			

DEPTH	BLOWS	QU TSF	W %
SILTY CLAY, Gray, Trace Sand and Gravel, Very Stiff, Moist (A-6)	8 13 21	3.00 S	17.1 15.5
LOAM, Gray, Little Gravel, Medium Dense, Moist (A-4) (Grain Size)			
SAND, Gray, Fine Grained, Loose, Saturated (A-3)	2 9 14	5.00 P	19.3 11.7 16.3 12.6
SAND AND GRAVEL, Gray, Medium Dense, Saturated (A-1-b) (Grain Size at 66.75') (Grain Size at 67.25')			
CLAY, Gray, Trace Sand and Gravel, Hard to Very Stiff to Hard, Moist (A-6)	7 10 13	4.50 P	12.6
	8 10 14	2.70 B	12.8
	8 10 15	2.90 B/S 4.60 B/S	12.0
End of Boring @ 75.0 feet			
(Note: The groundwater elevation at the completion of the borehole is not a true water table level as the drillers injected water down the borehole at approximately 65 feet to stabilize the saturated sand layer from heave.--Field Geotechnical Engineer's Observation)			

N=Standard Penetration Test-Blows per foot to drive 2" O.D. Split Spoon Sampler 12" with 140lb hammer falling 30"
(QU)B=Bulge S=Shear P=Penetration Test
Stations, Depths, Offset, and Elevations are in Feet
Offset is from Centerline of Existing Road
SEECO Job No. 7891G-5

REVISIONS	
NAME	DATE

ILLINOIS DEPARTMENT OF TRANSPORTATION

95TH STREET
AT 104TH AVENUE/FLAVIN ROAD
NORTHBOUND AND SOUTHBOUND
RETAINING WALLS
SOIL BORINGS

SCALE: VERT. HORIZ.

DRAWN BY : MVT
CHECKED BY:

6/7/2010
c:\pw_work\pwidot\triniakosmv\d0101671\retainingwalls.dgn

F.A.U. RTE.	SECTION	COUNTY	TOTAL SHEETS	SHEET NO.
1566	29 R-N-1	COOK	120	56
STA.		TO STA.		
FED. ROAD DIST. NO.	ILLINOIS	FED. AID PROJECT		

SHEET S7 OF S7

D1-91-026-02 CONTRACT NO. 62377

ILLINOIS DEPARTMENT OF TRANSPORTATION STRUCTURE BORING LOG

Page 1 Of 2 Date 6/12/06

ROUTE FAU 1566 (95th Street) DESCRIPTION Proposed Improvements (Contract No. 62377)
SECTION 29R-N-1 STRUCTURE NO. DRILLED BY KL&ES
COUNTY Cook LOCATION 104th Avenue/Flavin Road and 95th Street (Job # D-91-026-02)

Boring No. SB-1 Station 212+00 Offset 8' L
Surface El. 702.03+/- M.S.L.
Surf. Wat. El. Groundwater Elev.: When Drilling Dry At Completion Dry After Hrs

Description	Depth	Blows	QU TSF	W %
13" BITUMINOUS CONCRETE PAVEMENT	1.0			
3" CONCRETE PAVEMENT				
FILL: CLAY, Brown and Gray, Trace Sand and Gravel, Stiff, Moist (A-6)	2.0, 3.0		1.75 P	21.8
FILL: CLAY, Brown and Gray, Trace Dark Gray, Trace Sand and Gravel, Stiff to Very Stiff to Medium to Very Stiff to Stiff, Moist (A-6)	4.0, 5.0	6, 5, 2	1.50 P	25.6
(Hit rock at 3.5' to 5')				
(Hit rock at 6' to 7.5'--sample disturbed)	6.0, 7.0	6, 5, 3	1.50 P, 3.00 P, 0.50 P	23.8
(Dry Density = 99.9 pcf) (Little Dark Gray 7-7.5')				
(Hit rock at 8.5' to 9'-Highly disturbed)	8.0, 9.0	7, 4, 4	1.75 P, 3.00 P	19.7
(Hit rock at 11' to 12.5')	10.0, 11.0, 12.0	4, 3, 3	2.50 P	18.9
(No recovery-switched to wider plug in HSA. Took auger sample)	13.0, 14.0, 15.0	5, 4, 3	1.00 P	21.1
(Dry Density = 106.0 pcf)	16.0, 17.0, 18.0	4, 3, 4	1.70 B/S	17.1
FILL: CLAY, Brown and Gray, Trace Sand and Gravel, Stiff, Moist (A-6)	19.0, 20.0, 21.0	2, 2, 5	1.40 B/S	19.5
FILL: CLAY, Brown and Gray, Trace Dark Brown and Dark Gray, Trace Sand and Gravel, Very Stiff to Stiff, Moist (A-6) (Little Dark Brown Peat mixed in at 21' to 21.5')	22.0, 23.0, 24.0, 25.0, 26.0, 27.0, 28.0, 29.0, 30.0, 31.0, 32.0, 33.0, 34.0, 35.0, 36.0, 37.0, 38.0, 39.0, 40.0, 41.0, 42.0	2, 3, 5 / 3, 4, 7 / 3, 4, 6 / 4, 5, 6 / 7, 10	2.10 B/S / 2.80 B/S / 1.20 S / 1.50 B / 1.50 S	24.7 / 22.7 / 19.1 / 20.2 / 12.6
(Trace Brick Fragment at 35 feet)				
(Little Black, Trace Fibers Mixed in at 39.5')				

N=Standard Penetration Test-Blows per foot to drive 2" O.D. Split Spoon Sampler 12" with 140lb hammer falling 30"
(QU)B=Bulge S=Shear P=Penetration Test Stations, Depths, Offset, and Elevations are in Feet Offset is from Centerline of Existing Road
SEECO Job No. 7891G-5

ILLINOIS DEPARTMENT OF TRANSPORTATION STRUCTURE BORING LOG

Page 2 Of 2 Date 6/12/06

ROUTE FAU 1566 (95th Street) DESCRIPTION Proposed Improvements (Contract No. 62377)
SECTION 29R-N-1 STRUCTURE NO. DRILLED BY KL&ES
COUNTY Cook LOCATION 104th Avenue/Flavin Road and 95th Street (Job # D-91-026-02)

Boring No. SB-1 Station 212+00 Offset 8' L
Surface El. 702.03+/- M.S.L.
Surf. Wat. El. Groundwater Elev.: When Drilling Dry At Completion Dry After Hrs

Description	Depth	Blows	QU TSF	W %
30" ORGANIC CLAY, Black, Medium, Wet (A-7-5) (Dry Density = 73.3 pcf) (Organic Content = 5.3%) (Atterberg Limit)	43.0, 44.0, 45.0	5, 8, 8	1.60 B/S	17.1
18" ORGANIC CLAY, Dark Gray, Trace Fibers, Medium, Wet (A-7-5)	46.0, 47.0, 48.0	1, 1, 2	0.50 B	52.3 51.4 51.5
CLAY, Gray, Trace Dark Gray, Soft, Moist (A-7-6) (Organic Content = 2.2%)	49.0, 50.0	3, 2, 5	0.50 B, 0.43 B	51.3, 24.0
CLAY, Gray, Trace Sand and Gravel, Very Stiff to Stiff to Hard to Very Stiff, Moist (A-6)	51.0, 52.0, 53.0, 54.0, 55.0, 56.0, 57.0, 58.0, 59.0, 60.0, 61.0, 62.0, 63.0	1, 5, 5 / 4, 4, 7 / 7, 12, 13 / 5, 9, 12 / 7, 10, 15	2.00 B/S / 1.50 B / 3.80 B/S / 4.59 B/S / 3.50 B/S	19.0 / 18.6 / 15.2 / 16.1 / 15.5
	64.0, 65.0, 66.0, 67.0, 68.0, 69.0, 70.0, 71.0, 72.0, 73.0, 74.0, 75.0, 76.0, 77.0, 78.0, 79.0, 80.0, 81.0, 82.0, 83.0, 84.0	10, 13, 17 / 9, 10, 15 / 5, 6, 11 / 6, 9, 12 / 7, 7, 9 / 9, 12, 16 / 7, 11, 18	3.80 B/S / 5.20 B/S / 4.70 B/S / 4.00 B / 3.90 B/S / 2.60 B/S / 2.10 S / 4.90 B / 3.00 B	12.1 / 14.5 / 14.3 / 14.9 / 14.2 / 13.5 / 12.7 / 14.4
SILTY CLAY, Gray, Trace Sand and Gravel, Very Stiff, Moist (A-6)				
CLAY, Gray, Trace Sand and Gravel, Hard to Very Stiff, Moist (A-6) (Contains Coarse Gravel at 76' to 77.5')				
End of Boring @ 80.0 Feet				

N=Standard Penetration Test-Blows per foot to drive 2" O.D. Split Spoon Sampler 12" with 140lb hammer falling 30"
(QU)B=Bulge S=Shear P=Penetration Test Stations, Depths, Offset, and Elevations are in Feet Offset is from Centerline of Existing Road
SEECO Job No. 7891G-5

ILLINOIS DEPARTMENT OF TRANSPORTATION STRUCTURE BORING LOG

Page 1 Of 1 Date 6/12/06

ROUTE FAU 1566 (95th Street) DESCRIPTION Proposed Improvements (Contract No. 62377)
SECTION 29R-N-1 STRUCTURE NO. DRILLED BY KL&ES
COUNTY Cook LOCATION 104th Avenue/Flavin Road and 95th Street (Job # D-91-026-02)

Boring No. SB-3 Station 213+65 Offset 12' L
Surface El. 703.75+/- M.S.L.
Surf. Wat. El. Groundwater Elev.: When Drilling Dry At Completion Dry After Hrs

Description	Depth	Blows	QU TSF	W %
12" BITUMINOUS CONCRETE PAVEMENT	1.0			
FILL: CLAY, Brown and Gray, Trace Sand and Gravel, Stiff to Very Stiff to Hard, Moist (A-6)	2.0, 3.0	2, 2, 3	1.30 S	23.0
(Dry Density 108.7 pcf) (Combined Analysis) (Atterberg Limit)	4.0, 5.0	4, 5, 7	3.50 S	18.1
(3" Fill: Sandy Clay at 6'9" to 7')	6.0, 7.0, 8.0	3, 2, 3	2.75 P, 0.25 P, 5.10 S	23.2 / 19.0
FILL: CLAY, Brown and Gray, Trace Sand and Gravel, Very Stiff to Medium to Soft to Medium, Moist (A-6) (Dry Density 103.6 pcf)	9.0, 10.0	2, 2, 3	2.50 B/S	22.3
(Low Recovery--Hit rock while sampling at 16.5'-17.5')	11.0, 12.0, 13.0	1, 2, 4	0.60 B/S	25.4
	14.0, 15.0	1, 2, 3	0.43 B/S	22.5
	16.0, 17.0, 18.0	4, 8, 7	0.43 B/S	24.1
(Trace Dark Gray at 20 feet)	19.0, 20.0, 21.0	2, 1, 3	0.50 B/S	23.5
24" PEAT, Dark Brown, Fibrous, Soft, Wet (A-8) (Dry Density 18.4 pcf)	22.0, 23.0	2, 2, 3		284.3
ORGANIC SILTY CLAY LOAM, Dark Gray to Dark Brown, Trace Sand and Gravel, Trace Fibers, Very Soft, Moist (A-6) (Dry Density 88.89 pcf) (Combined Analysis) (Organic Content = 5.9%)	24.0, 25.0	1, 2, 4	0.20 B, 3.30 B/S	21.0 / 18.4
CLAY, Gray, Trace Sand and Gravel, Very Stiff to Stiff to Hard to Very Stiff, Moist (A-6) (Dry Density 105.8 pcf)	26.0, 27.0, 28.0	2, 3, 3	1.20 B/S, 1.50 B/S	23.0
(Dry Density 117.5 pcf)	29.0, 30.0, 31.0	3, 5, 5	1.10 B, 5.30 B/S	19.8 / 15.6
(Dry Density 119.0 pcf)	32.0, 33.0, 34.0	4, 4, 6	3.10 B	18.8
	35.0, 36.0, 37.0	4, 6, 6	4.40 B/S	15.5
End of Boring @ 40.0 Feet	38.0, 39.0, 40.0, 41.0, 42.0	4, 6, 8	2.80 B/S	17.0

N=Standard Penetration Test-Blows per foot to drive 2" O.D. Split Spoon Sampler 12" with 140lb hammer falling 30"
(QU)B=Bulge S=Shear P=Penetration Test Stations, Depths, Offset, and Elevations are in Feet Offset is from Centerline of Existing Road
SEECO Job No. 7891G-5

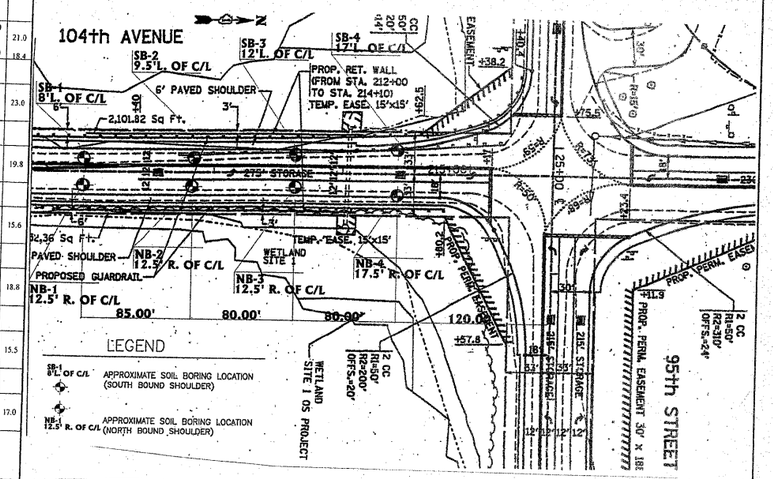

ILLINOIS DEPARTMENT OF TRANSPORTATION STRUCTURE BORING LOG

Page 1 Of 2 Date 6/12/06

ROUTE FAU 1566 (95th Street) DESCRIPTION Proposed Improvements (Contract No. 62377)
SECTION 29R-N-1 STRUCTURE NO. DRILLED BY KL&ES
COUNTY Cook LOCATION 104th Avenue/Flavin Road and 95th Street (Job # D-91-026-02)

Boring No. SB-2 Station 212+85 Offset 9.5' L
Surface El. 702.77+/- M.S.L.
Surf. Wat. El. Groundwater Elev.: When Drilling Dry At Completion Dry After Hrs

Description	Depth	Blows	QU TSF	W %
14" BITUMINOUS CONCRETE PAVEMENT	1.0			
2" CRUSHED STONE BASE COURSE				
FILL: SILTY CLAY, Brown and Gray, Trace Sand and Gravel, Stiff to Very Stiff to Hard, Moist (A-6)	2.0, 3.0	2, 3, 3	1.90 B/S	19.8
(Dry Density = 109.1 pcf) (Combined Analysis)	4.0, 5.0	2, 2, 3	2.70 B/S	20.1
FILL: CLAY, Brown and Gray, Trace Sand and Gravel, Stiff to Very Stiff, Moist (A-6) (Dry Density = 104.0 pcf)	22.0, 23.0, 24.0, 25.0, 26.0	3, 3, 5 / 3, 3, 4	1.60 S / 2.19 B/S	21.7 / 20.2
FILL: CLAY, Brown and Gray, Little Dark Gray, Trace Sand and Gravel, Stiff, Moist (A-6) (Dry Density = 108.1 pcf)	27.0, 28.0	4, 5	1.25 P	21.9
FILL: CLAY, Brown, Gray and Dark Gray, Trace Sand and Gravel, Very Stiff, Moist (A-6)	6.0, 7.0	4, 3, 6	5.00 B/S	16.7 / 22.4
FILL: CLAY, Gray, Trace Dark Gray, Trace Sand and Gravel, Stiff, Moist (A-6)	9.0	2, 5	1.50 P	24.8
FILL: PEAT, Dark Brown and Dark Gray, Some Gray Clay, Trace Sand, Medium, Wet (A-8)	10.0	2	0.50 P	45.3
FILL: CLAY, Brown and Gray, Trace Sand and Gravel, Stiff to Medium, Moist (A-6) (Atterberg Limits)	11.0, 12.0, 13.0, 14.0, 15.0	2, 2, 3 / 2, 2, 2	1.10 B/S / 0.90 B/S	19.5 / 20.8
FILL: CLAY, Brown and Gray, Little to Trace Dark Brown, Trace Sand and Gravel, Very Stiff to Hard to Stiff, Moist (A-6) (Dry Density = 106.1 pcf)	16.0, 17.0, 18.0, 19.0, 20.0	2, 3, 4 / 2, 3, 5	2.00 P, 4.00 P / 1.50 S	20.2 / 18.1
FILL: CLAY, Brown and Gray, Trace Sand and Gravel, Stiff to Very Stiff, Moist (A-6) (Dry Density = 106.7 pcf)	31.0, 32.0, 33.0, 34.0, 35.0	3, 5, 6 / 3, 5, 7	2.70 S / 2.80 B/S	19.9 / 16.5
(Dry Density = 112.5 pcf)	36.0, 37.0, 38.0	6, 6, 8	2.40 B/S	18.0
12" PEAT, Dark Brown, Fibrous, Soft, Wet (A-8) (Dry Density = 31.4 pcf)	39.0	3		142.3
18" ORGANIC CLAY, Black, Medium, Wet (A-7-5) (Dry Density = 74.4 pcf) (Organic Content = 5.9%)	40.0	4, 6	0.50 B	44.2
CLAY, Gray, Trace Sand and Gravel, Medium, Moist (A-6)	41.0, 42.0	2, 3	0.52	21.9

N=Standard Penetration Test-Blows per foot to drive 2" O.D. Split Spoon Sampler 12" with 140lb hammer falling 30"
(QU)B=Bulge S=Shear P=Penetration Test Stations, Depths, Offset, and Elevations are in Feet Offset is from Centerline of Existing Road
SEECO Job No. 7891G-5

ILLINOIS DEPARTMENT OF TRANSPORTATION STRUCTURE BORING LOG

Page 2 Of 2 Date 6/12/06

ROUTE FAU 1566 (95th Street) DESCRIPTION Proposed Improvements (Contract No. 62377)
SECTION 29R-N-1 STRUCTURE NO. DRILLED BY KL&ES
COUNTY Cook LOCATION 104th Avenue/Flavin Road and 95th Street (Job # D-91-026-02)

Boring No. SB-2 Station 212+85 Offset 9.5' L
Surface El. 702.77+/- M.S.L.
Surf. Wat. El. Groundwater Elev.: When Drilling Dry At Completion Dry After Hrs

Description	Depth	Blows	QU TSF	W %
SANDY CLAY, Gray, Medium, Moist (A-6) (Dry Density = 117.2 pcf)	43.0, 44.0, 45.0	3, 3, 4	0.62 B/S	18.7
CLAY, Gray, Trace Sand and Gravel, Very Stiff to Hard, Moist (A-6) (Dry Density = 115.8 pcf)	46.0, 47.0, 48.0	4, 5, 7	2.30 B/S	14.9
(Dry Density = 118.9 pcf)	49.0, 50.0, 51.0	6, 10, 12	5.20 B/S	15.9
(Dry Density = 119.7 pcf)	52.0, 53.0, 54.0, 55.0, 56.0, 57.0, 58.0, 59.0, 60.0, 61.0, 62.0, 63.0	6, 8, 9 / 7, 12, 13 / 5, 7, 9 / 5, 8, 12 / 9, 9, 13	5.00 B/S / 5.10 B/S / 4.00 B / 4.30 B / 3.60 B/S	16.2 / 13.0 / 14.8 / 14.3 / 14.0
(Dry Density = 121.6 pcf)	64.0, 65.0, 66.0, 67.0, 68.0, 69.0, 70.0, 71.0, 72.0, 73.0, 74.0, 75.0, 76.0, 77.0, 78.0, 79.0, 80.0, 81.0, 82.0, 83.0, 84.0	7, 9, 12 / 13, 15, 16 / 9, 10, 14	2.70 B/S / 4.90 B/S / 8.10 B/S / 4.30 B/S	12.9 / 13.3 / 13.8
(Dry Density = 123.5 pcf)				
End of Boring @ 80.0 feet				

N=Standard Penetration Test-Blows per foot to drive 2" O.D. Split Spoon Sampler 12" with 140lb hammer falling 30"
(QU)B=Bulge S=Shear P=Penetration Test Stations, Depths, Offset, and Elevations are in Feet Offset is from Centerline of Existing Road
SEECO Job No. 7891G-5

ILLINOIS DEPARTMENT OF TRANSPORTATION STRUCTURE BORING LOG

Page 1 Of 1 Date 6/12/06

ROUTE FAU 1566 (95th Street) DESCRIPTION Proposed Improvements (Contract No. 62377)
SECTION 29R-N-1 STRUCTURE NO. DRILLED BY KL&ES
COUNTY Cook LOCATION 104th Avenue/Flavin Road and 95th Street (Job # D-91-026-02)

Boring No. SB-4 Station 214+45 Offset 17' L
Surface El. 704.82+/- M.S.L.
Surf. Wat. El. Groundwater Elev.: When Drilling 25.5' At Completion 19.33' After Hrs

Description	Depth	Blows	QU TSF	W %
11" BITUMINOUS CONCRETE PAVEMENT	1.0			
2" CRUSHED STONE BASE COURSE				
FILL: CLAY, Brown and Gray, Trace Sand and Gravel, Very Stiff to Stiff, Moist (A-6)	2.0, 3.0	4, 4, 5	3.50 B	13.6
(Dry Density = 109.4 pcf)	4.0, 5.0, 6.0	2, 2, 2	2.25 P, 1.50 P	21.2
(Dry Density = 109.4 pcf)	7.0, 8.0	2, 2, 4	1.50 B/S	19.3
30" CLAY (Transition Material), Dark Gray, Trace Brown, Trace Sand and Gravel, Medium, Moist (A-6) (Dry Density = 93.4 pcf) (Organic Content = 2.6%)	9.0, 10.0	2, 3, 6	0.60 B	26.7
CLAY, Brown and Gray, Trace Sand and Gravel, Very Stiff to Hard to Stiff, Moist (A-6) (Dry Density = 102.64 pcf)	11.0, 12.0	3, 5, 7	3.60 B/S	20.1
(Trace Dark Gray at 13.5'-14')	13.0, 14.0, 15.0	5, 6, 9	6.80 B/S	20.3
(Hit rock--Low recovery)	16.0, 17.0, 18.0	9, 10, 15	1.50 P	24.7
CLAY, Brownish Gray, Trace Sand and Gravel, Hard, Moist (A-6) (Dry Density = 123.5 pcf)	19.0, 20.0, 21.0	5, 6, 9	6.40 B/S	12.4
SILTY CLAY, Gray, Trace Sand and Gravel, Very Stiff, Moist (A-6) (Dry Density = 119.5 pcf) (Combined Analysis)	22.0, 23.0, 24.0, 25.0	5, 8, 9 / 3, 5, 7	3.00 B / 2.40 B	14.3 / 15.3
SANDY LOAM, Brown and Gray, Some Gravel, Medium Dense, Saturated (A-2-4) (Grain Size)	26.0	8		20.5
SILTY CLAY LOAM, Gray, Little Sand, Trace Gravel, Very Stiff, Moist (A-6) (Dry Density = 125.5 pcf) (Combined Analysis) (Atterberg Limits)	27.0, 28.0, 29.0, 30.0	5, 6, 3, 4	2.90 B / 3.40 B	12.9 / 14.1
	31.0, 32.0, 33.0	6, 7, 8	2.50 B	15.5
SILT, Gray, Medium Dense, Moist (A-4) (Dry Density = 109.8 pcf)	34.0, 35.0	6, 7, 15		19.9 / 13.9
SANDY LOAM, Brownish Gray, Some Gravel, Medium Dense, Saturated (A-1-b) (Grain Size) (SANDY CLAY LOAM (A-6), Brownish Gray, Little Gravel at 36'-36.5'--Grain Size)	36.0, 37.0	6, 10, 11	4.10 S	16.4 / 12.8
CLAY, Brownish Gray, Trace Sand and Gravel, Hard to Very Stiff, Moist (A-6) (Dry Density = 124.2 pcf)	38.0, 39.0, 40.0	7, 5, 8	2.20 B	14.7
End of Boring @ 40.0 feet	41.0, 42.0			

N=Standard Penetration Test-Blows per foot to drive 2" O.D. Split Spoon Sampler 12" with 140lb hammer falling 30"
(QU)B=Bulge S=Shear P=Penetration Test Stations, Depths, Offset, and Elevations are in Feet Offset is from Centerline of Existing Road
SEECO Job No. 7891G-5

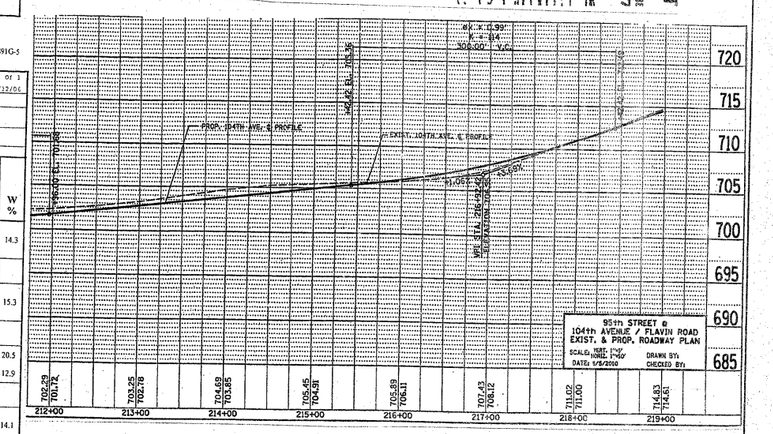

REVISIONS	
NAME	DATE

ILLINOIS DEPARTMENT OF TRANSPORTATION

95TH STREET AT 104TH AVENUE/FLAVIN ROAD NORTHBOUND AND SOUTHBOUND RETAINING WALLS SOIL BORINGS

SCALE: VERT. HORIZ.

DRAWN BY : MVT
CHECKED BY:

6/7/2010
c:\pw_work\pwidot\tinickosmv\d0101671\retainingwalls.dgn

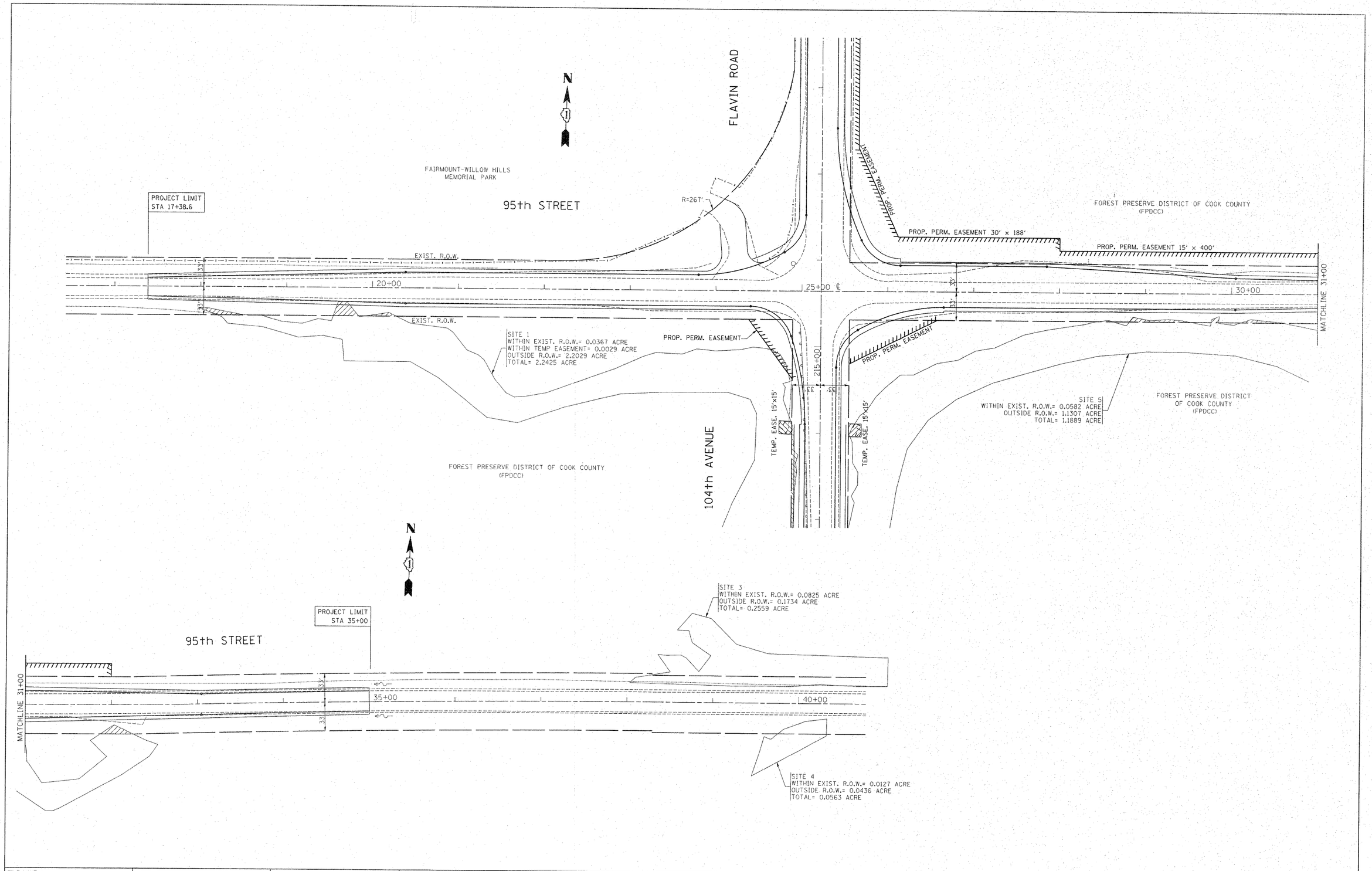

FILE NAME = c:\pw_work\pwidot\steedpa\d0159915\P144499-Design.dgn	USER NAME = steedpa	DESIGNED -	REVISED -	**STATE OF ILLINOIS DEPARTMENT OF TRANSPORTATION**	WETLAND LOCATIONS AND IMPACTS 95th STREET @ 104th AVENUE/ FLAVIN ROAD	F.A.U. RTE.	SECTION	COUNTY	TOTAL SHEETS	SHEET NO.
		DRAWN -	REVISED -			1566	29 R-N-1	COOK	120	57
	PLOT SCALE = 50.7684 ' / IN.	CHECKED -	REVISED -					CONTRACT NO. 62377		
	PLOT DATE = 2/3/2011	DATE -	REVISED -		SCALE: SHEET NO. OF SHEETS STA. TO STA.			ILLINOIS FED. AID PROJECT		

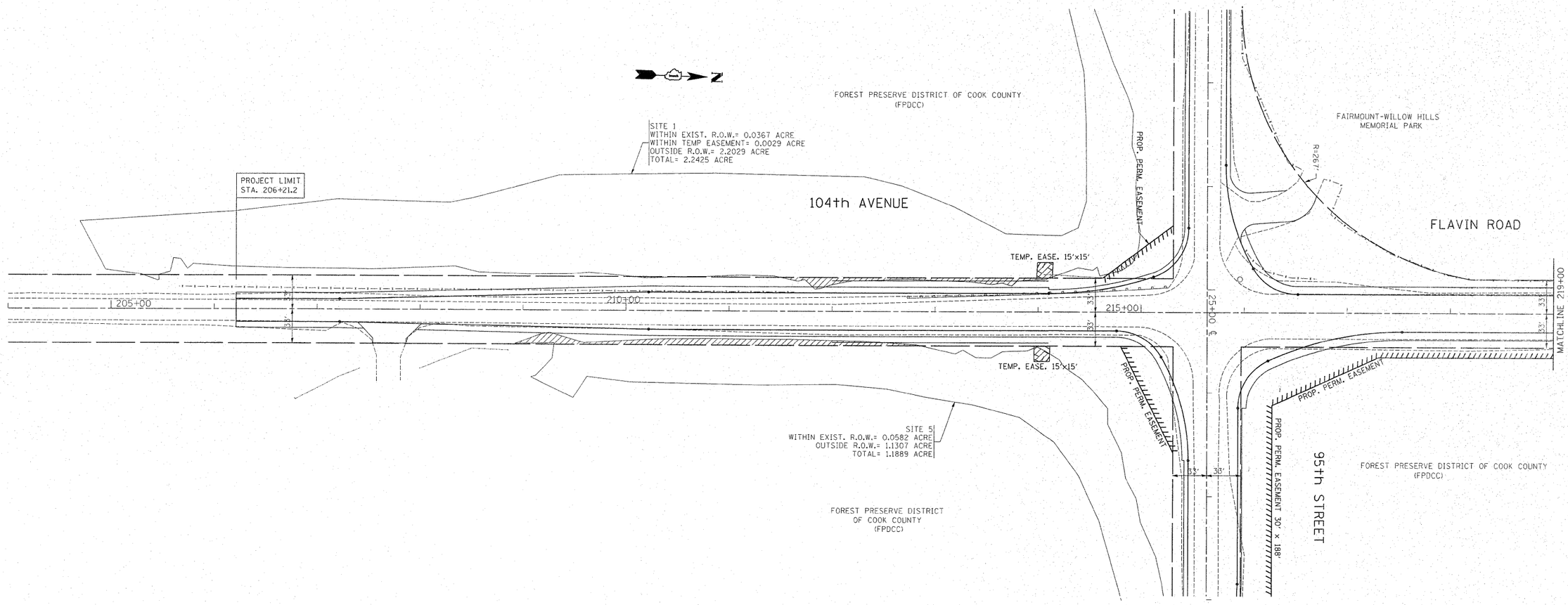

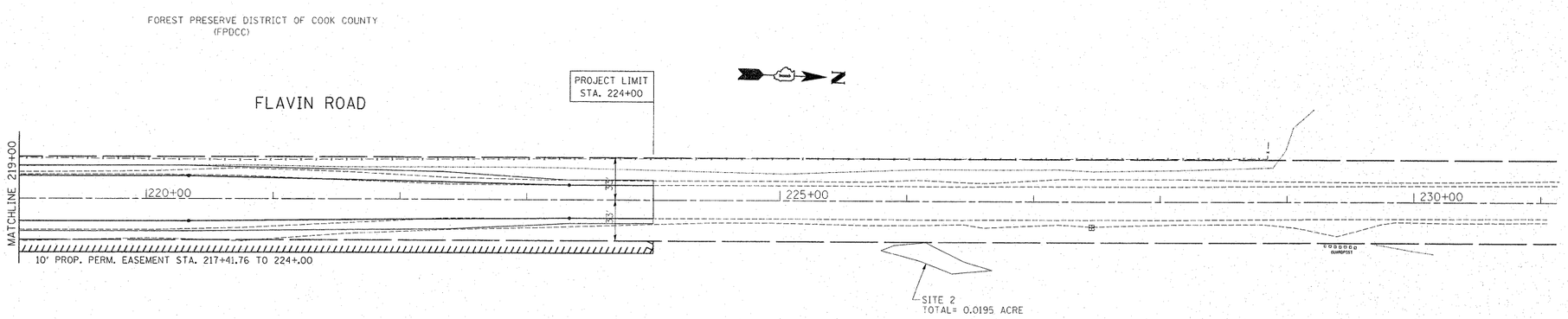

FILE NAME = c:\pw_work\pwidot\steedpa\d0159915\P144899-Design.dgn	USER NAME = steedpa	DESIGNED -	REVISED -
		DRAWN -	REVISED -
	PLOT SCALE = 50.7684 ' / IN.	CHECKED -	REVISED -
	PLOT DATE = 2/3/2011	DATE -	REVISED -

STATE OF ILLINOIS
DEPARTMENT OF TRANSPORTATION

WETLAND LOCATIONS AND IMPACTS
95th STREET @ 104th AVENUE/ FLAVIN ROAD

SCALE: | SHEET NO. OF SHEETS | STA. TO STA.

F.A.U. RTE.	SECTION	COUNTY	TOTAL SHEETS	SHEET NO.
1566	29 R-N-1	COOK	120	58

CONTRACT NO. 62377

ILLINOIS FED. AID PROJECT

F.A.U. RTE.	SECTION	COUNTY	TOTAL SHEETS	SHEET NO.
1566	29 R-N-1	COOK	120	59
STA.		TO STA.		
FED. ROAD DIST. NO.	ILLINOIS	FED. AID PROJECT		

CONTRACT NO.: 62377

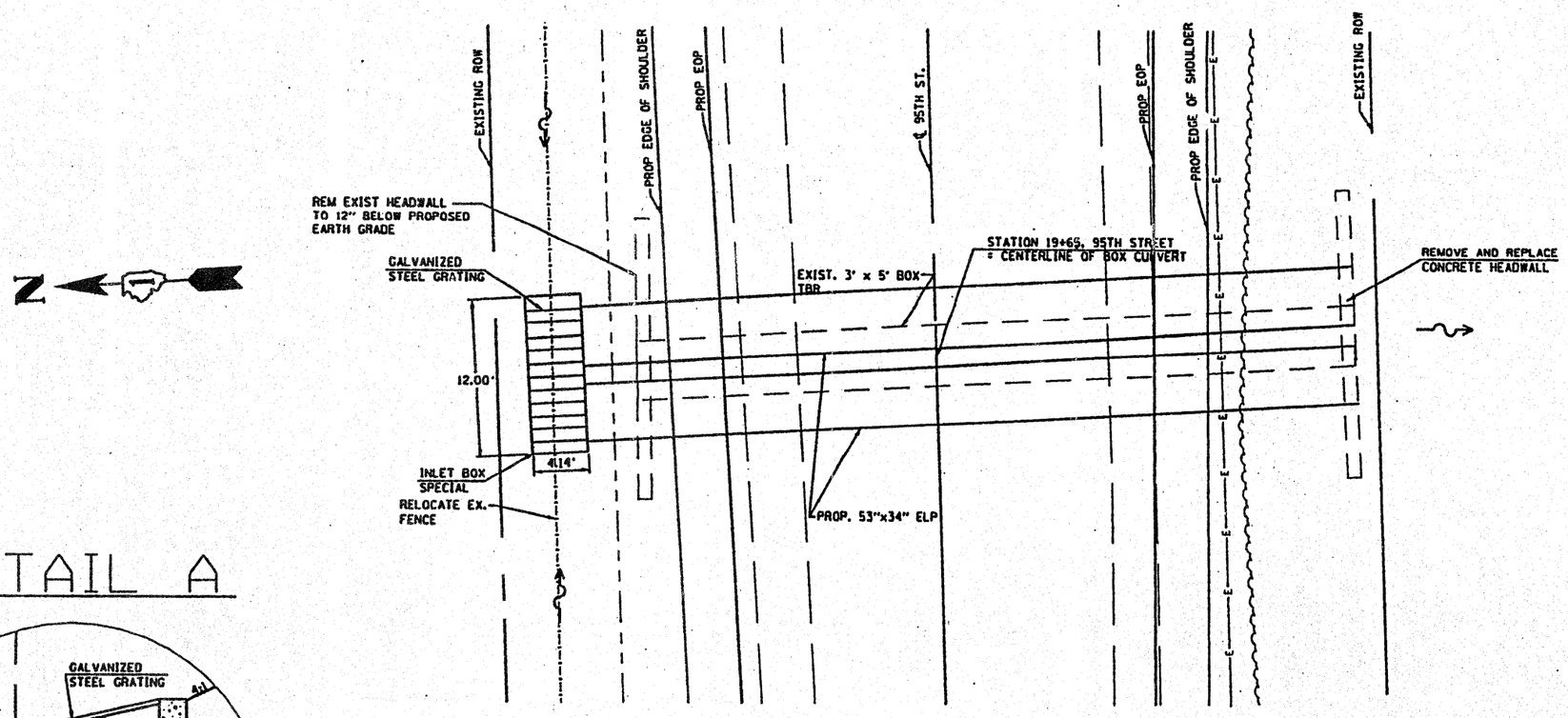

PLAN VIEW

DETAIL A

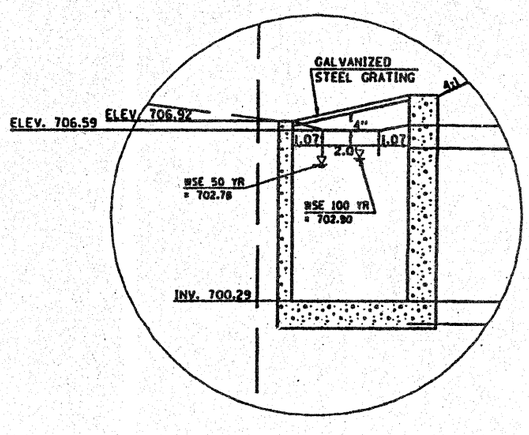

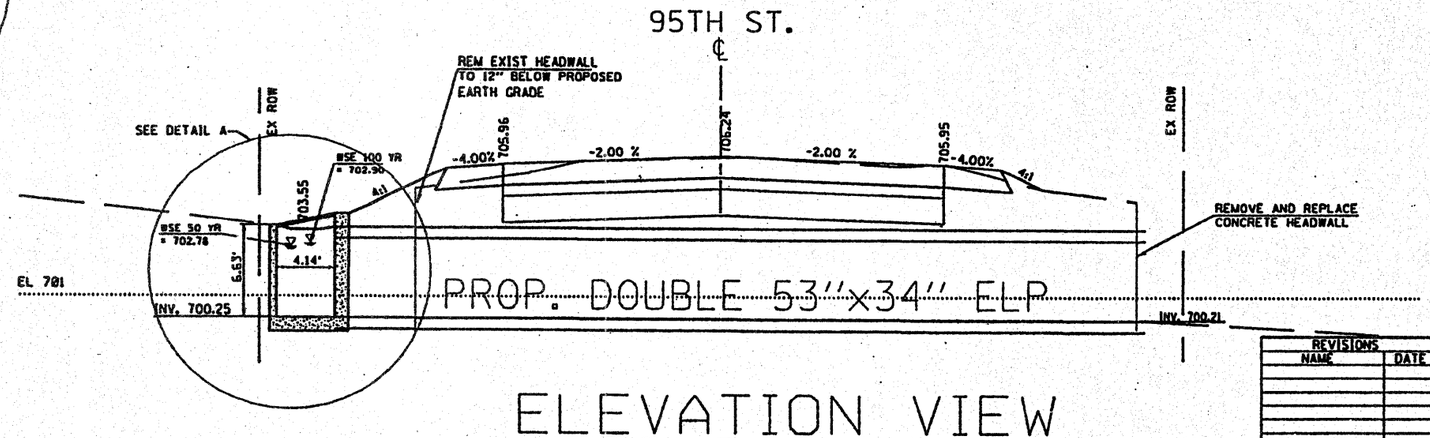

ELEVATION VIEW
LOOKING EAST

EXHIBIT 2-00B

REVISIONS NAME	DATE

ILLINOIS DEPARTMENT OF TRANSPORTATION

MAJOR CULVERT CROSSSING
STATION 19+65
PROP. DOUBLE 53"x34"
CONC. ELLIPTICAL PIPE
EXHIBIT 2-00b

SCALE: VERT.
HORIZ.
DATE 11/19/2003

DRAWN BY RLH
CHECKED BY MED

F.A.U. RTE.	SECTION	COUNTY	TOTAL SHEETS	SHEET NO.
1566	29 R-N-1	COOK	120	60
STA.	TO STA.			
FED. ROAD DIST. NO.	ILLINOIS	FED. AID PROJECT		

CONTRACT NO.: 62377

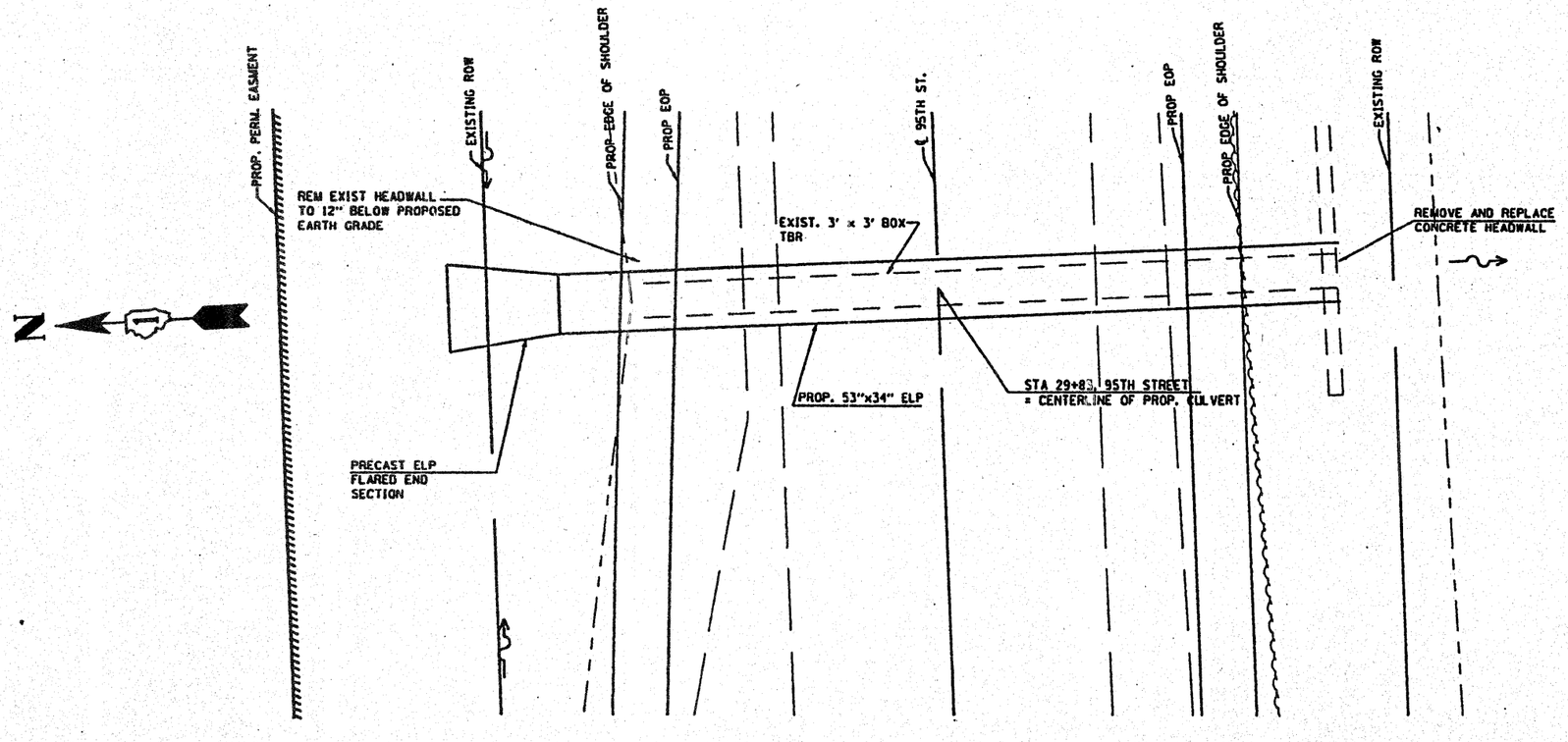

PLAN VIEW

95TH ST.

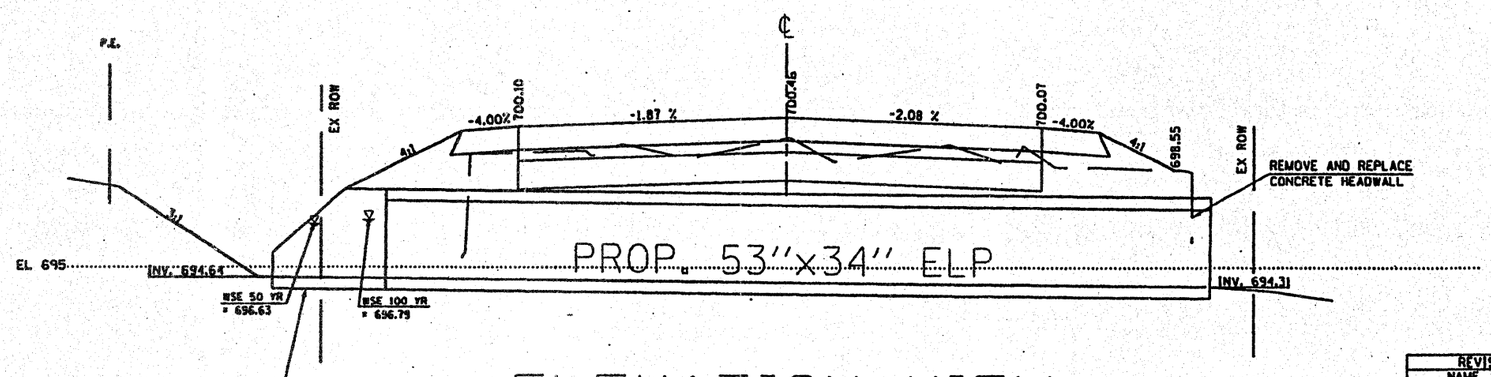

ELEVATION VIEW
LOOKING EAST

EXHIBIT 2-00C

REVISIONS	
NAME	DATE

ILLINOIS DEPARTMENT OF TRANSPORTATION

MAJOR CULVERT CROSSSING
STATION 29+83
PROP. 53" x 34" ELLIPTICAL
CONC. PIPE
EXHIBIT 2-00c

SCALE: VERT. HORIZ.
DATE 11/19/2003
DRAWN BY RLH
CHECKED BY MED

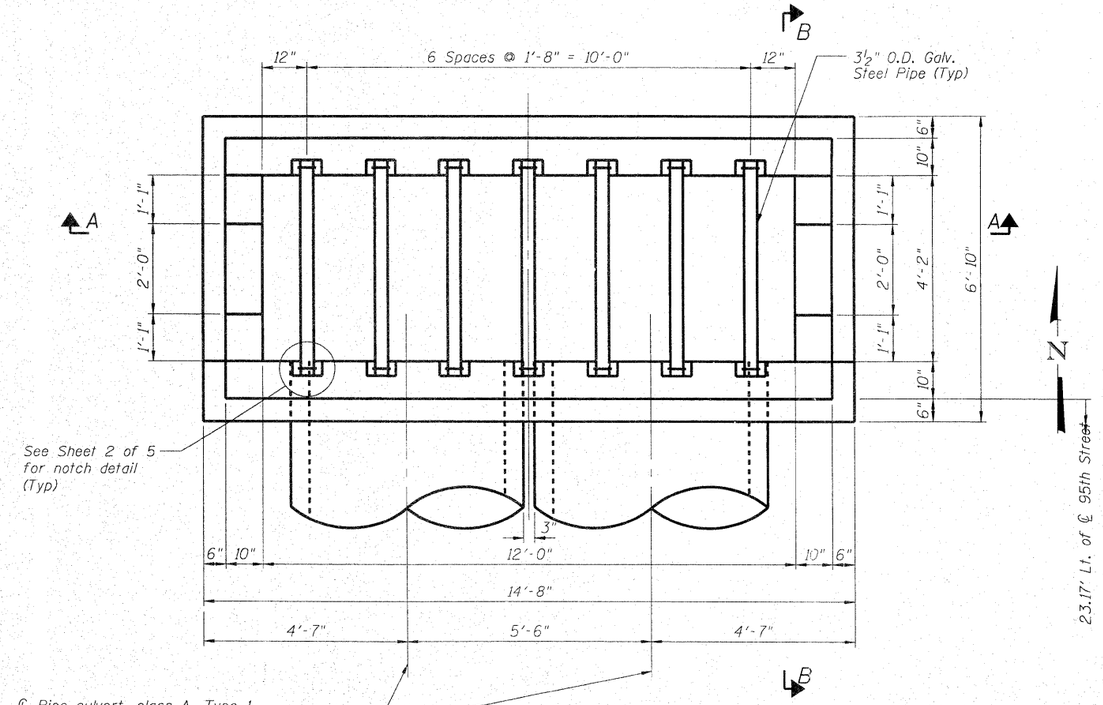

TOP PLAN

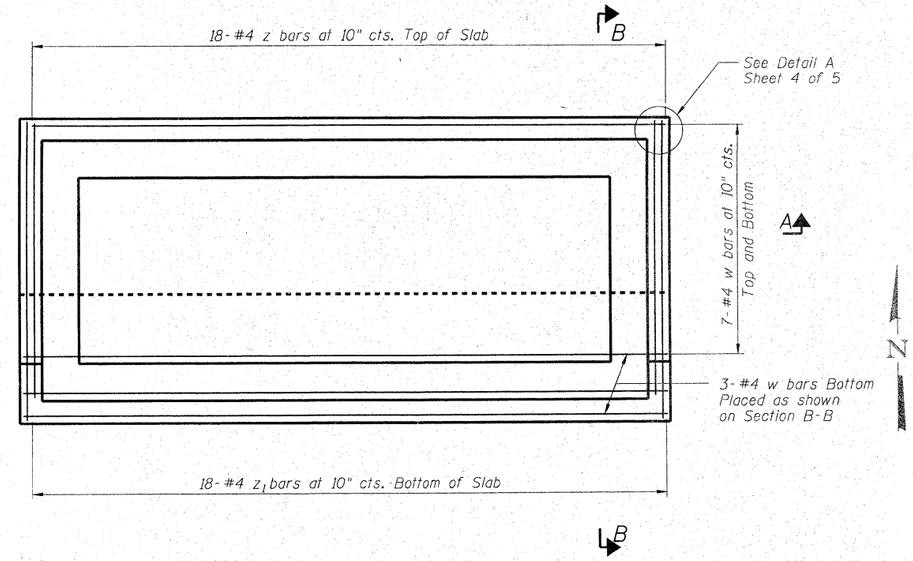

BOTTOM SLAB PLAN

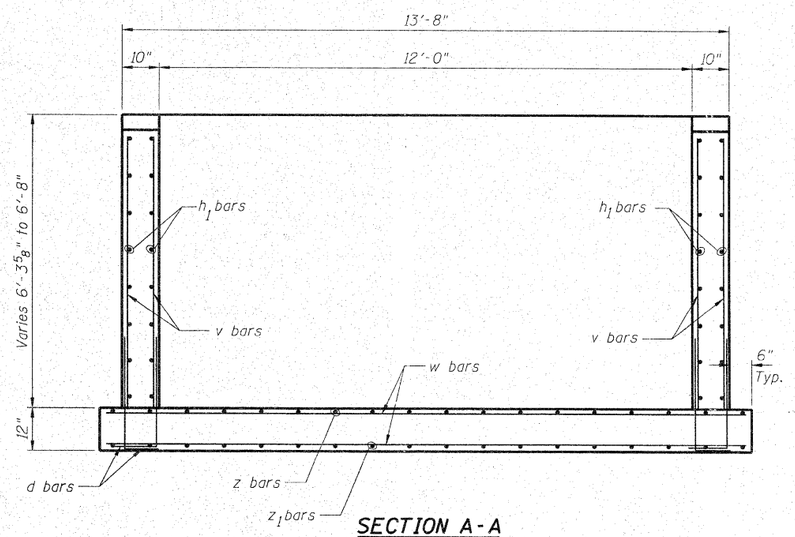

SECTION A-A

Note: Steel pipes not shown

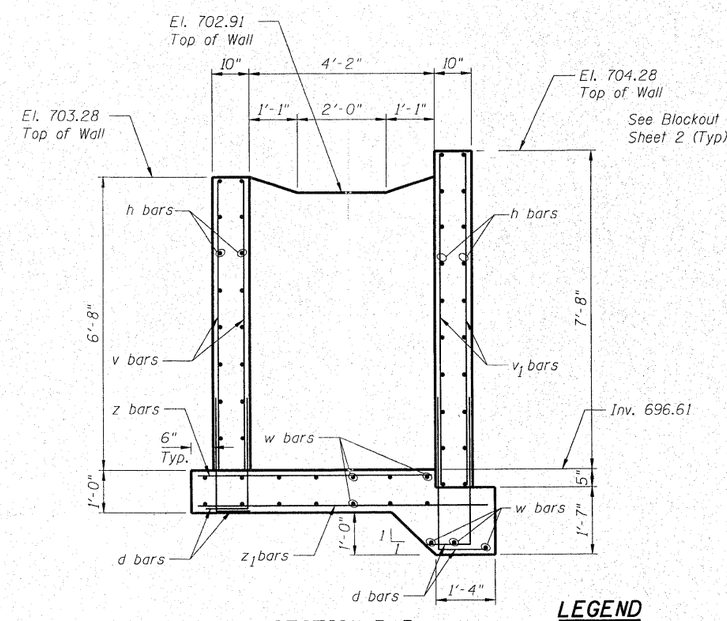

SECTION B-B

Note: Steel pipes not shown

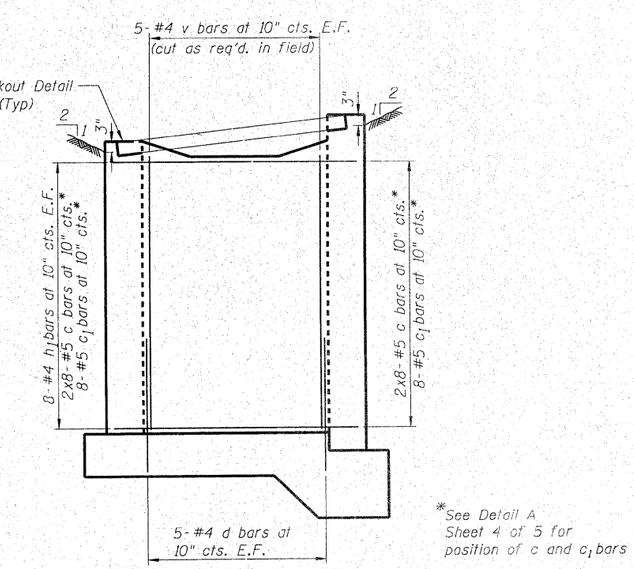

*See Detail A Sheet 4 of 5 for position of c and c_1 bars

WEST WALL ELEVATION
EAST WALL ELEVATION (OPPOSITE)

LEGEND

E.F. = Each Face

SHEET 1 OF 5

BAXTER & WOODMAN Consulting Engineers	USER NAME =	DESIGNED - BAB	REVISED -	STATE OF ILLINOIS DEPARTMENT OF TRANSPORTATION	CONCRETE DROP BOX AT STATION 19+65	F.A. RTE. 1566	SECTION 29 R-N-1	COUNTY COOK	TOTAL SHEETS 120 / SHEET NO. 61
		CHECKED - BLB	REVISED -						
	PLOT SCALE =	DRAWN - BCD	REVISED -					CONTRACT NO. 62377	
	PLOT DATE =	CHECKED - BLB	REVISED -		SHEET NO. OF SHEETS		ILLINOIS FED. AID PROJECT		

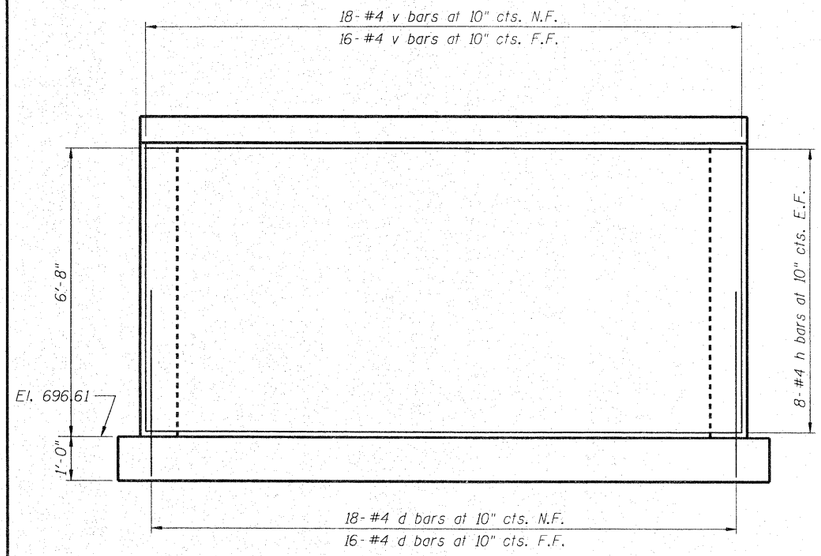

NORTH WALL ELEVATION

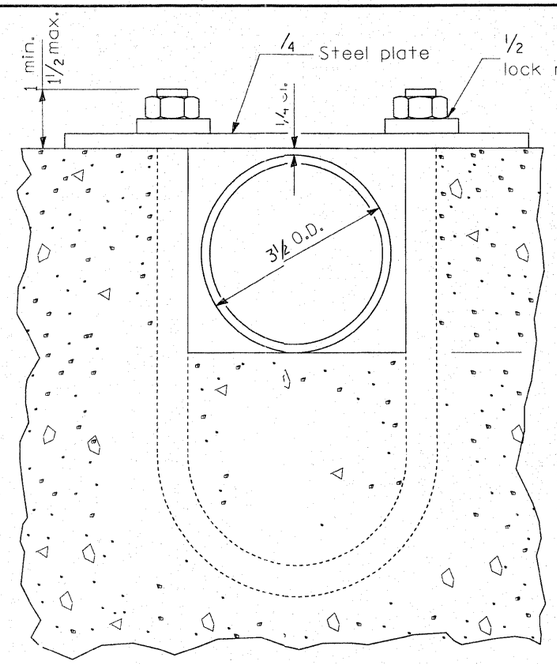

SECTION C-C

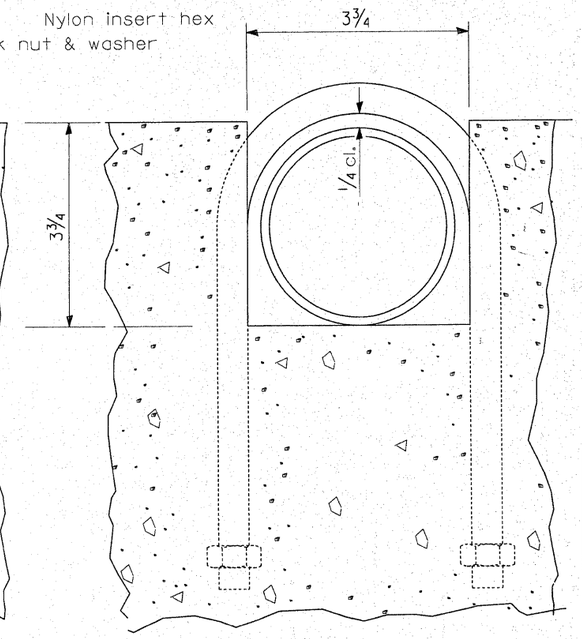

SECTION D-D

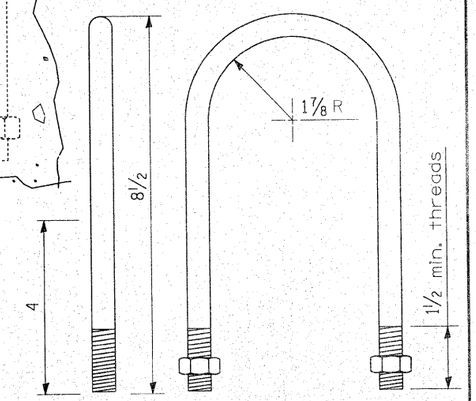

1/2 U BOLT

(14 - required)

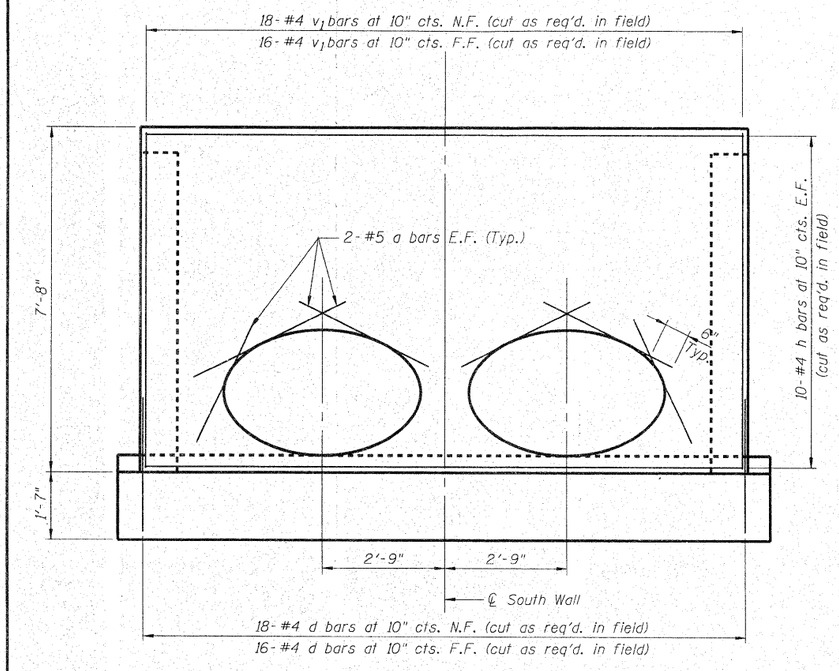

SOUTH WALL ELEVATION

LEGEND

E.F. = Each Face
N.F. = Near Face
F.F. = Far Face

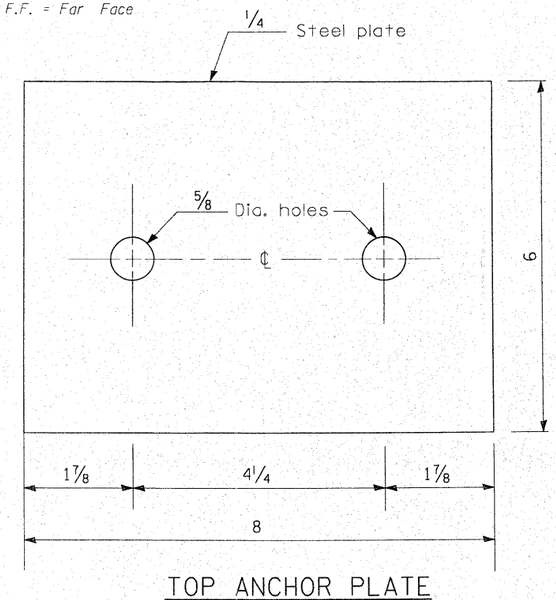

TOP ANCHOR PLATE

(7 - required)

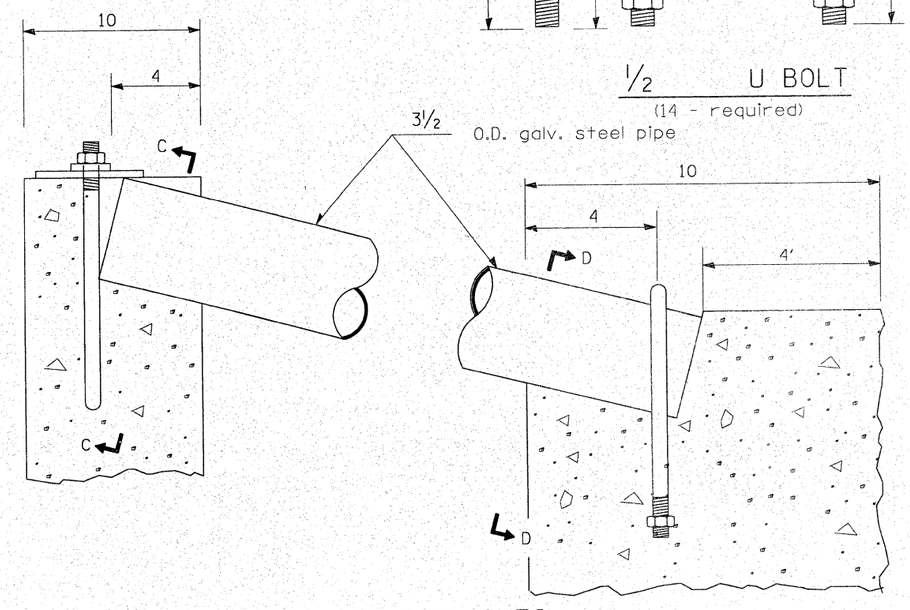

DETAIL AT BLOCKOUTS

SHEET 2 OF 5

BAXTER & WOODMAN Consulting Engineers	USER NAME =	DESIGNED - BAB	REVISED -
		CHECKED - BLB	REVISED -
	PLOT SCALE =	DRAWN - BCD	REVISED -
	PLOT DATE =	CHECKED - BLB	REVISED -

STATE OF ILLINOIS
DEPARTMENT OF TRANSPORTATION

CONCRETE DROP BOX AT STATION 19+65

SHEET NO. OF SHEETS

F.A. RTE.	SECTION	COUNTY	TOTAL SHEETS	SHEET NO.
1566	29 R-N-1	COOK	120	62
		CONTRACT NO. 62377		
		ILLINOIS FED. AID PROJECT		

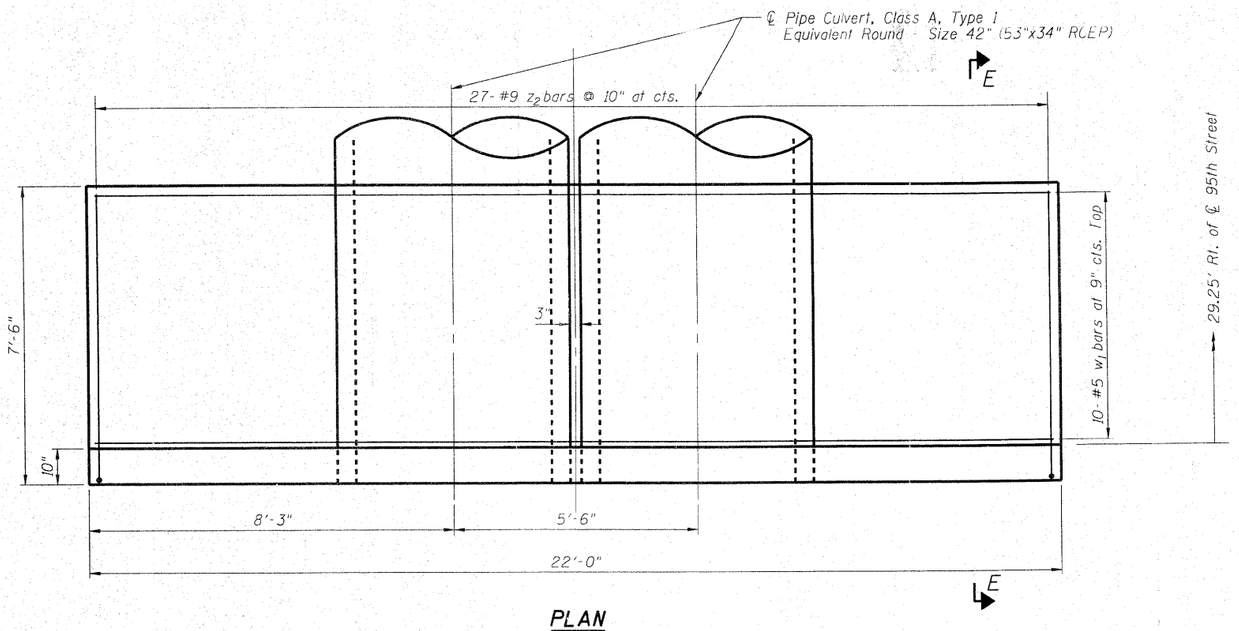

PLAN

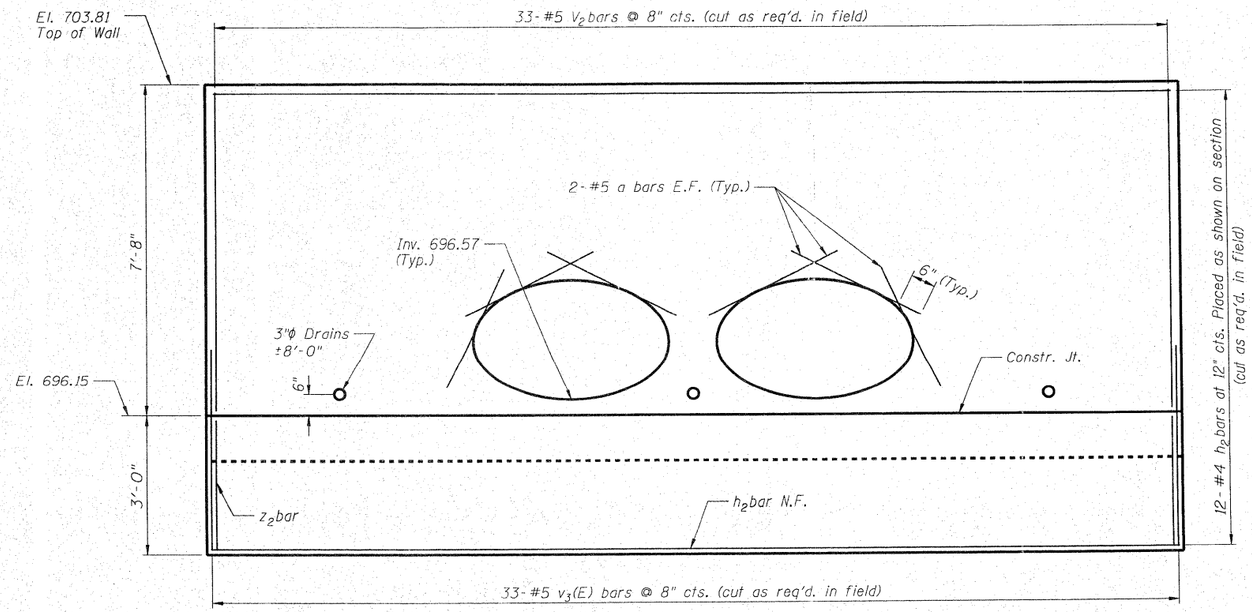

WALL ELEVATION

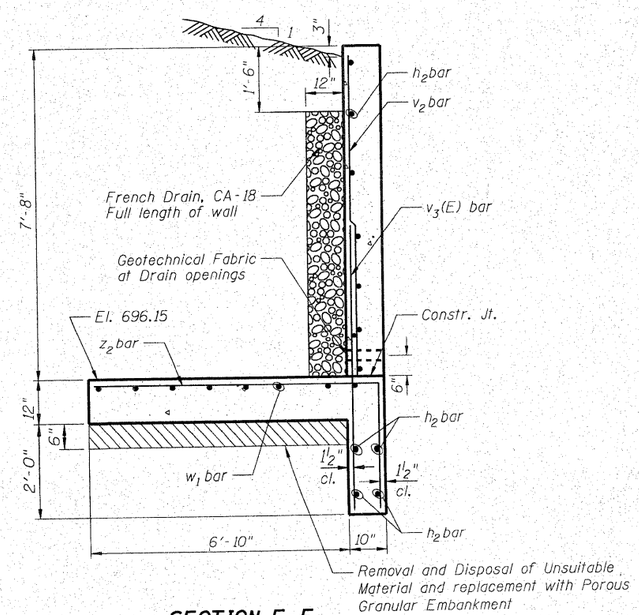

SECTION E-E

SHEET 3 OF 5

BAXTER & WOODMAN Consulting Engineers	USER NAME =	DESIGNED - BAB	REVISED -	STATE OF ILLINOIS DEPARTMENT OF TRANSPORTATION	HEADWALL AT STATION 19+65	F.A. RTE. 1566	SECTION 29 R-N-1	COUNTY COOK	TOTAL SHEETS 120 / SHEET NO. 63
		CHECKED - BLB	REVISED -					CONTRACT NO. 62377	
	PLOT SCALE =	DRAWN - BCD	REVISED -					ILLINOIS FED. AID PROJECT	
	PLOT DATE =	CHECKED - BLB	REVISED -		SHEET NO. OF SHEETS				

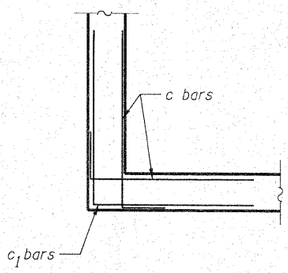

DETAIL A

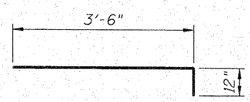

BAR d

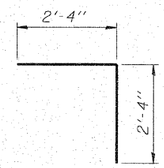

BAR c_1

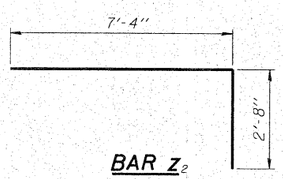

BAR z_2

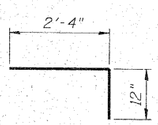

BAR c

DESIGN SPECIFICATIONS

2002 AASHTO Standard Specification for Highway Bridges, 17th edition.

DESIGN STRESSES

fy = 60,000 psi
f'c = 3,500 psi
Allowable Net Soil Bearing Pressure = 2,400 psf Minimum

GENERAL NOTES

Reinforcement bars shall conform to requirements of ASTM A706, Gr 60. See Special Provisions.

Place reinforcing bars to provide 2 inches clear concrete cover except where shown on drawings.

Reinforcement bars designated (E) shall be epoxy coated.

All construction joints shall be bonded.

Provide 1" chamfer on all exposed edges, except where shown on drawings.

Place geotechnical fabric where shown (to be included in the work for FRENCH DRAIN, CA-18).

Additional undercutting beyond that shown on drawings is not anticipated, but if required to achieve the minimum allowable net soil bearing pressure, it will be paid for as REMOVAL AND DISPOSAL OF UNSUITABLE MATERIAL. Replacement material shall be paid for as POROUS GRANULAR EMBANKMENT.

Grating shall include pipes, plates, expansion bolts, and all other hardware as shown and shall be included with the contract unit price per Cu. Yd. for CONCRETE STRUCTURES.

Bolts, Nuts, and Washers shall be in accordance with Article 1006.08 of the Standard Specifications and shall be galvanized.

Steel Plates shall conform to AASHTO M-183 and shall be galvanized conforming to AASHTO M-111.

Steel Pipes shall conform to A.S.T.M. A-53 (Type E or S) Grade B, Schedule 40, and shall be galvanized conforming to A.S.T.M. A-120. Contractor shall verify pipe length.

Design scour elevation at downstream end is 693.15'.

BILL OF MATERIAL

Bar	No.	Size	Length	Shape
a	24	#5	5'-4"	
c	64	#5	3'-4"	
c1	32	#5	4'-8"	
d	88	#4	4'-6"	
h	36	#4	14'-4"	
h1	32	#4	5'-6"	
h2	12	#4	21'-8"	
v	54	#4	6'-6"	
v1	34	#4	7'-6"	
v2	33	#5	7'-6"	
v3 (E)	33	#5	5'-8"	
w	17	#4	14'-4"	
w1	10	#5	21'-8"	
z	18	#4	5'-2"	
z1	18	#4	6'-6"	
z2	27	#5	10'-0"	

Removal and Disposal of Unsuitable Material	Cu Yd.	3
Porous Granular Embankment	Cu Yd.	3
Concrete Structures	Cu Yd.	24.4
Reinforcement Bars	Pound	2520
Reinforcement Bars, Epoxy Coated	Pound	200
French Drain, CA-18	Cu Yd.	5.0

SHEET 4 OF 5

Wang Engineering
wangeng@wangeng.com
1145 N Main Street
Lombard, IL 60148
Telephone: 630 953-9928
Fax: 630 953-9938

BORING LOG B-1

WEI Job No.: 132-06-01

Client: Baxter & Woodman Consulting Engineers
Project: Culvert Improvements - 95th Street at 104th Avenue
Location: Cook County, Illinois

Datum: NGVD
Elevation: 706.00 ft
North: ft
East: ft
Station: 19+37
Offset: 12.5 RT

Elevation (ft)	SOIL AND ROCK DESCRIPTION	Depth (ft)	Sample Type	Sample No.	SPT Values (blw/6 in)	q_u (tsf)	Moisture Content (%)
706.0	Crushed Stone --SHOULDER AGGREGATE--						
	Stiff to very stiff CLAY LOAM, trace gravel --FILL--		X	1	2 1 1	1.15 B	20
		5	X	2	2 2 2	1.15 B	31
			X	3	2 2 4	2.05 B	24
698.0	Stiff, brown and gray CLAY LOAM						
		10	X	4	2 3 3	1.97 B	24
			X	5	1 3 4	1.80 B	19
687.0	Hard, brown and gray SILTY CLAY						
		15	X	6	5 8 9	5.08 B	17
			X	7	5 8 8	5.41 B	18
686.0		20	X	8	4 41 11	3.03 B	15
	Boring terminated at 20.00 ft.						

GENERAL NOTES

Begin Drilling: 07-28-2010 Complete Drilling: 07-28-2010
Drilling Contractor: WTS Drill Rig: Mobile B-57 TMR
Driller: K&J Logger: F Bozga Checked by: S. Sugiarto
Drilling Method: 3.25 IDA HSA; boring backfilled upon completion

WATER LEVEL DATA

While Drilling: ▽ Dry
At Completion of Drilling: ▼ Dry
Time After Drilling: NA
Depth to Water: ▼ NA

The stratification lines represent the approximate boundary between soil types; the actual transition may be gradual.

Wang Engineering
wangeng@wangeng.com
1145 N Main Street
Lombard, IL 60148
Telephone: 630 953-9928
Fax: 630 953-9938

BORING LOG B-2

WEI Job No.: 132-06-01

Client: Baxter & Woodman Consulting Engineers
Project: Culvert Improvements - 95th Street at 104th Avenue
Location: Cook County, Illinois

Datum: NGVD
Elevation: 706.00 ft
North: ft
East: ft
Station: 19+69
Offset: 9.5 LT

Elevation (ft)	SOIL AND ROCK DESCRIPTION	Depth (ft)	Sample Type	Sample No.	SPT Values (blw/6 in)	q_u (tsf)	Moisture Content (%)
	12-inch thick ASPHALT --PAVEMENT--						
705.0	Medium stiff to very stiff, brown and gray CLAY LOAM --FILL--		X	1	2 3 4	3.03 B	21
		5	X	2	0 1 2	0.57 B	22
			X	3	1 2 3	1.31 B	26
698.0	Stiff to very stiff, brown and gray CLAY LOAM						
		10	X	4	2 2 4	1.97 B	29
			X	5	2 2 4	2.54 B	19
690.0	Hard, brown and gray SILTY CLAY, trace gravel						
		15	X	6	6 8 10	>7.38 B	16
			X	7	9 10 10	>7.38 B	16
686.0		20	X	8	3 8 8	3.03 B	16
	Boring terminated at 20.00 ft.						

GENERAL NOTES

Begin Drilling: 07-28-2010 Complete Drilling: 07-28-2010
Drilling Contractor: WTS Drill Rig: Mobile B-57 TMR
Driller: K&J Logger: F Bozga Checked by: S. Sugiarto
Drilling Method: 3.25 IDA HSA; boring backfilled upon completion

WATER LEVEL DATA

While Drilling: ▽ Dry
At Completion of Drilling: ▼ Dry
Time After Drilling: NA
Depth to Water: ▼ NA

The stratification lines represent the approximate boundary between soil types; the actual transition may be gradual.

SHEET 5 OF 5

BAXTER & WOODMAN Consulting Engineers	USER NAME =	DESIGNED - BAB	REVISED -
		CHECKED - BLB	REVISED -
	PLOT SCALE =	DRAWN - BCD	REVISED -
	PLOT DATE =	CHECKED - BLB	REVISED -

STATE OF ILLINOIS
DEPARTMENT OF TRANSPORTATION

BORING LOG

SHEET NO. OF SHEETS

F.A. RTE.	SECTION	COUNTY	TOTAL SHEETS	SHEET NO.
1566	29 R-N-1	COOK	120	65
		CONTRACT NO. 62377		
		ILLINOIS FED. AID PROJECT		

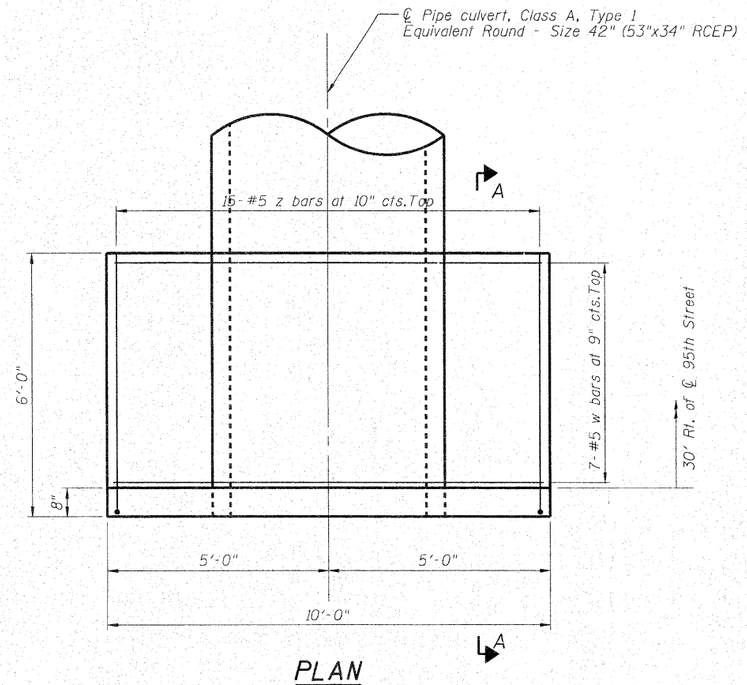

PLAN

DESIGN SPECIFICATIONS

2002 AASHTO Standard Specification for Highway Bridges, 17th edition.

DESIGN STRESSES

fy = 60,000 psi
f'c = 3,500 psi
Allowable Net Soil Bearing Pressure = 1,500 psf Minimum

GENERAL NOTES

Reinforcement bars shall conform to requirements of ASTM A706, Gr 60. See Special Provisions.

Place reinforcing bars to provide 2 inches clear concrete cover except where shown on drawings.

Reinforcement bars designated (E) shall be epoxy coated.

All construction joints shall be bonded.

Provide 1" chamfer on all exposed edges, except where shown on drawings.

Place geotechnical fabric where shown (to be included in the work for FRENCH DRAIN, CA-18).

The limits and quantities of removal and replacement shown are based on the boring data and may be modified by the District Geotechnical and Field Engineers for variable subsurface conditions encountered in the field.

Additional undercutting beyond that shown on drawings is not anticipated, but if required to achieve the minimum allowable net soil bearing pressure, it will be paid for as REMOVAL AND DISPOSAL OF UNSUITABLE MATERIAL. Replacement material shall be paid for as CONTROLLED LOW STRENGTH MATERIAL (CLSM).

Mix design for CLSM shall be in accordance with Section 1019.05, "MIX 3".

Design scour elevation at downstream end is 690.89'.

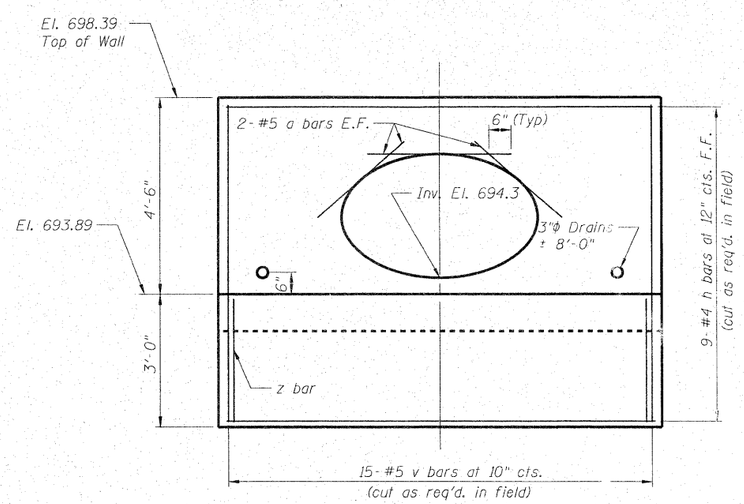

WALL ELEVATION

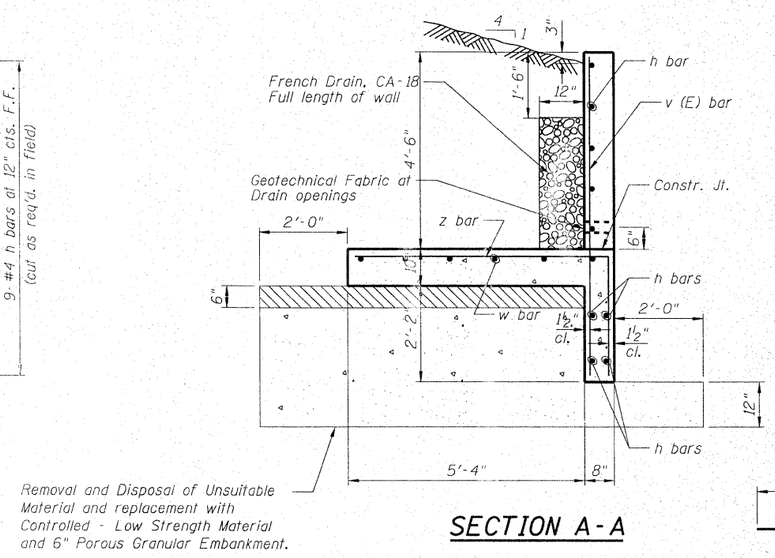

SECTION A-A

BILL OF MATERIAL

Bar	No.	Size	Length	Shape
a	6	#5	5'-4"	
h	9	#4	9'-8"	
v1(E)	12	#5	7'-2"	
w	8	#5	9'-8"	
z	10	#5	8'-4"	

Removal and Disposal of Unsuitable Material	Cu. Yds.	5
Porous Granular Embankment	Cu. Yds.	1
Removal of Existing Structure	Ea.	1
Concrete Structures	Cu. Yds.	3.5
Reinforcement Bars	Pound	290
Reinforcement Bars, Epoxy Coated	Pound	100
Controlled Low Strength Material	Cu. Yds.	2.0
French Drain, CA-18	Cu. Yds.	1.0

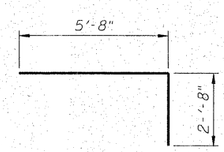

BAR z

SHEET 1 OF 2

BAXTER & WOODMAN Consulting Engineers	USER NAME =	DESIGNED - BAB	REVISED -
		CHECKED - BLB	REVISED -
	PLOT SCALE =	DRAWN - BCD	REVISED -
	PLOT DATE =	CHECKED - BAB	REVISED -

STATE OF ILLINOIS
DEPARTMENT OF TRANSPORTATION

CONCRETE HEADWALL AT STATION 29+83

SHEET NO. OF SHEETS

F.A. RTE.	SECTION	COUNTY	TOTAL SHEETS	SHEET NO.
1566	29 R-N-1	COOK	120	66

CONTRACT NO. 62377

ILLINOIS FED. AID PROJECT

BORING LOG B-3

Page 1 of 1

Wang Engineering

wangeng@wangeng.com
1145 N Main Street
Lombard, IL 60148
Telephone: 630 953-9928
Fax: 630 953-9938

WEI Job No.: 132-06-01

Client: Baxter & Woodman Consulting Engineers
Project: Culvert Improvements - 95th Street at 104th Avenue
Location: Cook County, Illinois

Datum: NGVD
Elevation: 700.00 ft
North: ft
East: ft
Station: 29+78
Offset: 17.0 RT

Profile	Elevation (ft)	SOIL AND ROCK DESCRIPTION	Depth (ft)	Sample Type	Sample No.	SPT Values (blw/6 in)	Qu (tsf)	Moisture Content (%)
	699.5	Crushed Stone --SHOULDER AGGREGATE--						
		Soft to very stiff, brown and gray CLAY LOAM --FILL--		X	1	3 4 4	3.20 B	16
			5	X	2	1 1 2	0.25 P	34
	692.5	Medium stiff to stiff, black and brown CLAY LOAM, trace organic matter		X	3	1 2 3	1.56 B	38
			10	X	4	2 2 3	1.50 P	45
		--L_c(%)=61, P_L(%)=33-- --ORGANIC CONTENT=9.2%--		X	5	1 2 2	1.28 B	63
			15	X	6	1 1 1	0.49 B	74
	684.5	Very soft, gray SILTY CLAY LOAM to SILTY LOAM		X	7	0 0 0	< 0.25 P	42
			20	X	8	0 0 0	< 0.25 P	23

Profile	Elevation (ft)	SOIL AND ROCK DESCRIPTION	Depth (ft)	Sample Type	Sample No.	SPT Values (blw/6 in)	Qu (tsf)	Moisture Content (%)
	676.5	Medium stiff to very stiff, gray CLAY		X	9	0 1 1	0.74 B	25
			25	X	10	4 4 4	1.15 B	19
	672.5			X	11	4 7 7	2.13 B	18
		Boring terminated at 27.50 ft						
			30					
			35					
			40					

GENERAL NOTES

Begin Drilling: 07-28-2010 Complete Drilling: 07-28-2010
Drilling Contractor: WTS Drill Rig: Mobile B-57 TMR
Driller: K&J Logger: F Bozga Checked by: S. Sugiarto
Drilling Method: 3.25 IDA HSA; boring backfilled upon completion

WATER LEVEL DATA

While Drilling: ▽ Dry
At Completion of Drilling: ▼ Dry
Time After Drilling: NA
Depth to Water: ▼ NA

The stratification lines represent the approximate boundary between soil types; the actual transition may be gradual.

WANGENGINC 132060 1.GPJ WANGENG.GDT 8/6/10

BORING LOG B-3B

Page 1 of 1

Wang Engineering

wangeng@wangeng.com
1145 N Main Street
Lombard, IL 60148
Telephone: 630 953-9928
Fax: 630 953-9938

WEI Job No.: 132-06-01

Client: Baxter & Woodman Consulting Engineers
Project: Culvert Improvements - 95th Street at 104th Avenue
Location: Cook County, Illinois

Datum: NGVD
Elevation: 700.00 ft
North: ft
East: ft
Station: 29+78
Offset: 17 RT

Profile	Elevation (ft)	SOIL AND ROCK DESCRIPTION	Depth (ft)	Sample Type	Sample No.	SPT Values (blw/6 in)	Qu (tsf)	Moisture Content (%)
		--BLIND DRILLING--	5					
			10					
			15					
	684.0	Very soft to soft, brown and gray SILTY CLAY LOAM to SILTY LOAM		X	1		< 0.25 P	42
		--A-4(9)-- --L_c(%)=28, P_L(%)=18--	20					

Profile	Elevation (ft)	SOIL AND ROCK DESCRIPTION	Depth (ft)	Sample Type	Sample No.	SPT Values (blw/6 in)	Qu (tsf)	Moisture Content (%)
	679.0	--%Gravel=3.3-- --%Sand=24.2-- --%Silt=53.0-- --%Clay=19.5--		X	2		0.34 B	25
		Boring terminated at 21.00 ft						
			25					
			30					
			35					
			40					

GENERAL NOTES

Begin Drilling: 07-28-2010 Complete Drilling: 07-28-2010
Drilling Contractor: WTS Drill Rig: Mobile B-57 TMR
Driller: K&J Logger: F Bozga Checked by: S. Sugiarto
Drilling Method: 3.25 IDA HSA; boring backfilled upon completion

WATER LEVEL DATA

While Drilling: ▽ Dry
At Completion of Drilling: ▼ Dry
Time After Drilling: NA
Depth to Water: ▼ NA

The stratification lines represent the approximate boundary between soil types; the actual transition may be gradual.

WANGENGINC 132060 1.GPJ WANGENG.GDT 8/6/10

SHEET 2 OF 2

BAXTER & WOODMAN Consulting Engineers	USER NAME =	DESIGNED - BAB	REVISED -
		CHECKED - BLB	REVISED -
	PLOT SCALE =	DRAWN - BCD	REVISED -
	PLOT DATE =	CHECKED - BLB	REVISED -

STATE OF ILLINOIS
DEPARTMENT OF TRANSPORTATION

BORING LOG

SHEET NO. OF SHEETS

F.A. RTE.	SECTION	COUNTY	TOTAL SHEETS	SHEET NO.
1566	29 R-N-1	COOK	120	67
		CONTRACT NO. 62377		
		ILLINOIS FED. AID PROJECT		

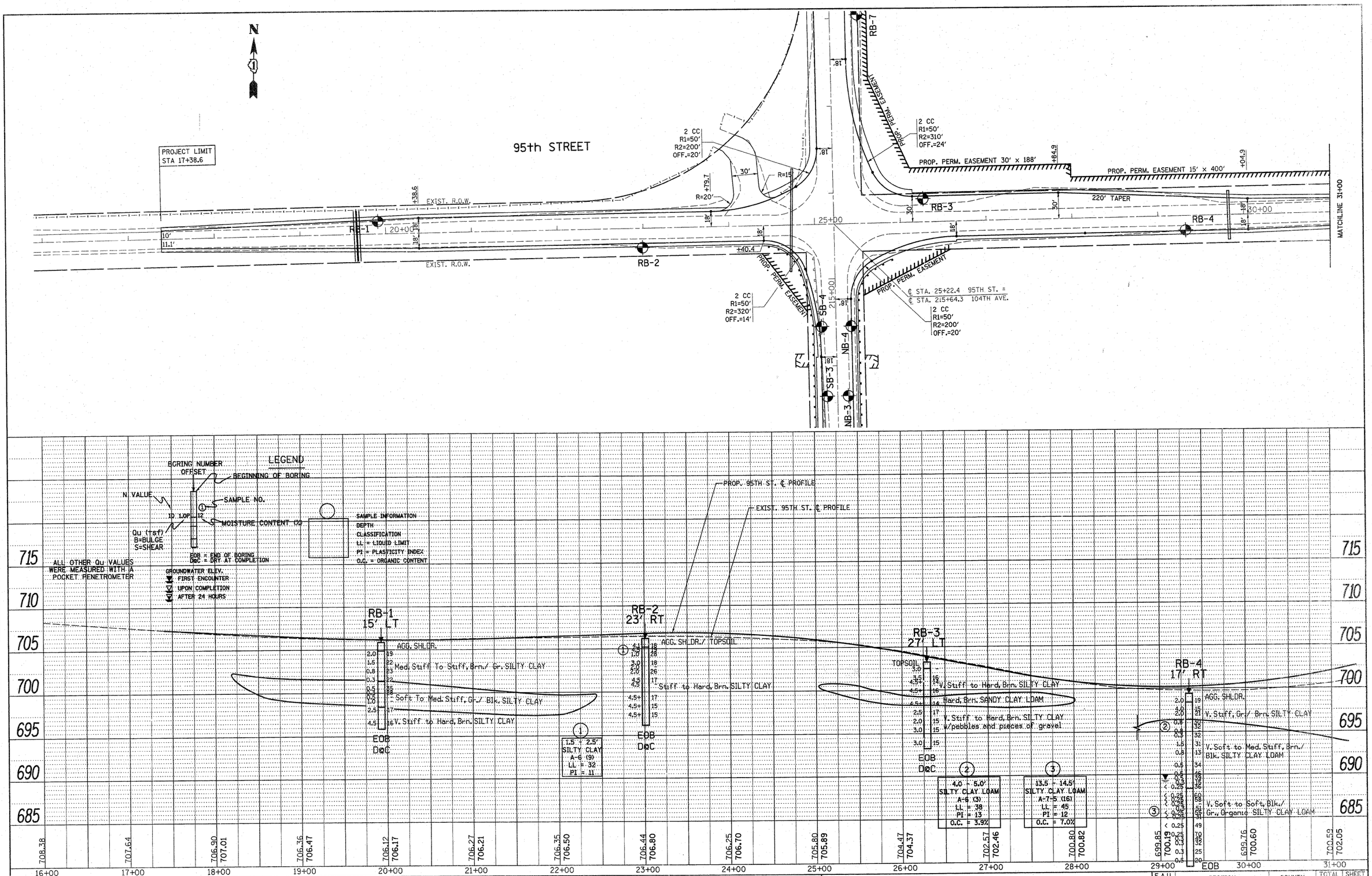

PLAN

NOTE BOOK NO.	SURVEYED	PLOTTED	ALIGNMENT CHECKED	R.T. OF WAY CHECKED	CADD FILE NAME	BY	DATE

PROFILE

NOTE BOOK NO.	SURVEYED	PLOTTED	GRADES CHECKED	STRUCTURE NOTATNS CHKD	BY	DATE

FILE NAME = C:\pw_work\PWIDOT\LISZEKRF\d0159937\P144489-sht-soil.dgn	USER NAME = liszekrf	DESIGNED -	REVISED -
	PLOT SCALE = 50.000 ' / IN.	DRAWN -	REVISED -
	PLOT DATE = 6/8/2010	CHECKED -	REVISED -
		DATE -	REVISED -

STATE OF ILLINOIS
DEPARTMENT OF TRANSPORTATION

95th STREET @
104th AVENUE / FLAVIN ROAD
SOIL PLAN AND PROFILE

SCALE: | SHEET NO. OF SHEETS | STA. TO STA.

F.A.U. RTE.	SECTION	COUNTY	TOTAL SHEETS	SHEET NO.
1566	29R-N-1	COOK	120	68

CONTRACT NO. 62377

ILLINOIS FED. AID PROJECT

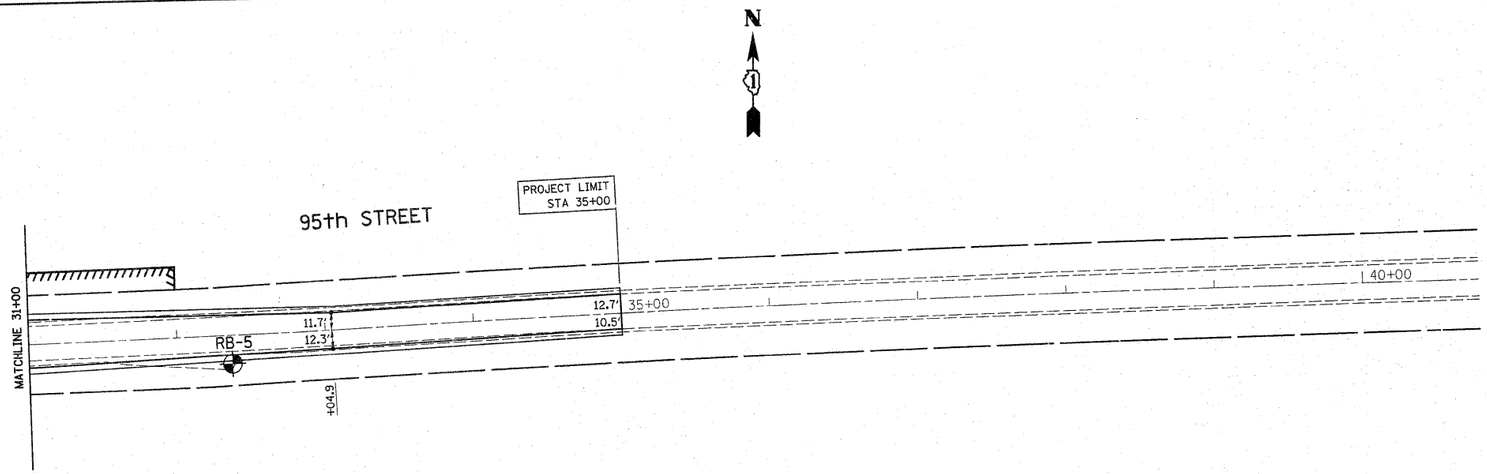

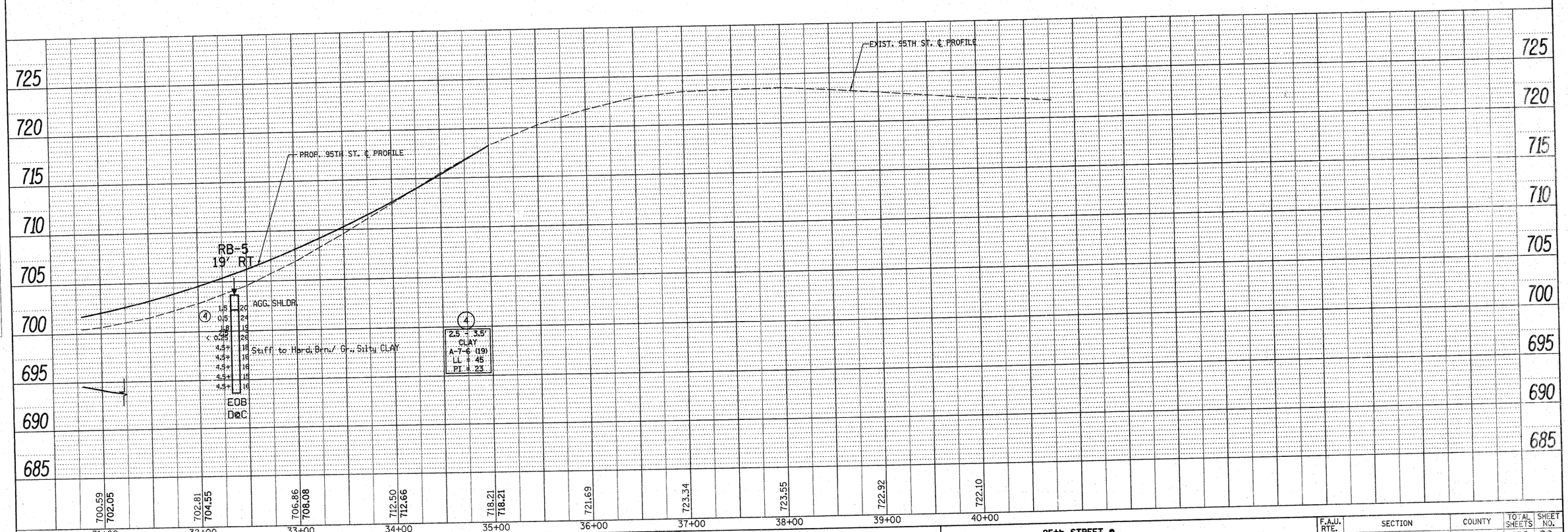

PLAN
NOTE BOOK NO.
SURVEYED
PLOTTED
ALIGNMENT CHECKED
RT. OF WAY CHECKED
CADD FILE NAME
BY
DATE

PROFILE
NOTE BOOK NO.
SURVEYED
PLOTTED
GRADES CHECKED
B.M. NOTED
STRUCTURE NOTAT'NS CH'KD
BY
DATE

FILE NAME = C:\pw_work\PWIDOT\LISZEKRF\d0159937\P144499-sht-soil.dgn	USER NAME = liszekrf	DESIGNED -	REVISED -
		DRAWN -	REVISED -
	PLOT SCALE = 50.000 ' / IN.	CHECKED -	REVISED -
	PLOT DATE = 6/7/2010	DATE -	REVISED -

STATE OF ILLINOIS
DEPARTMENT OF TRANSPORTATION

95th STREET @
104th AVENUE / FLAVIN ROAD
SOIL PLAN AND PROFILE

SCALE: | SHEET NO. OF SHEETS | STA. TO STA.

F.A.U. RTE.	SECTION	COUNTY	TOTAL SHEETS	SHEET NO.
1566	29R-N-1	COOK	120	69

CONTRACT NO. 62377

ILLINOIS FED. AID PROJECT

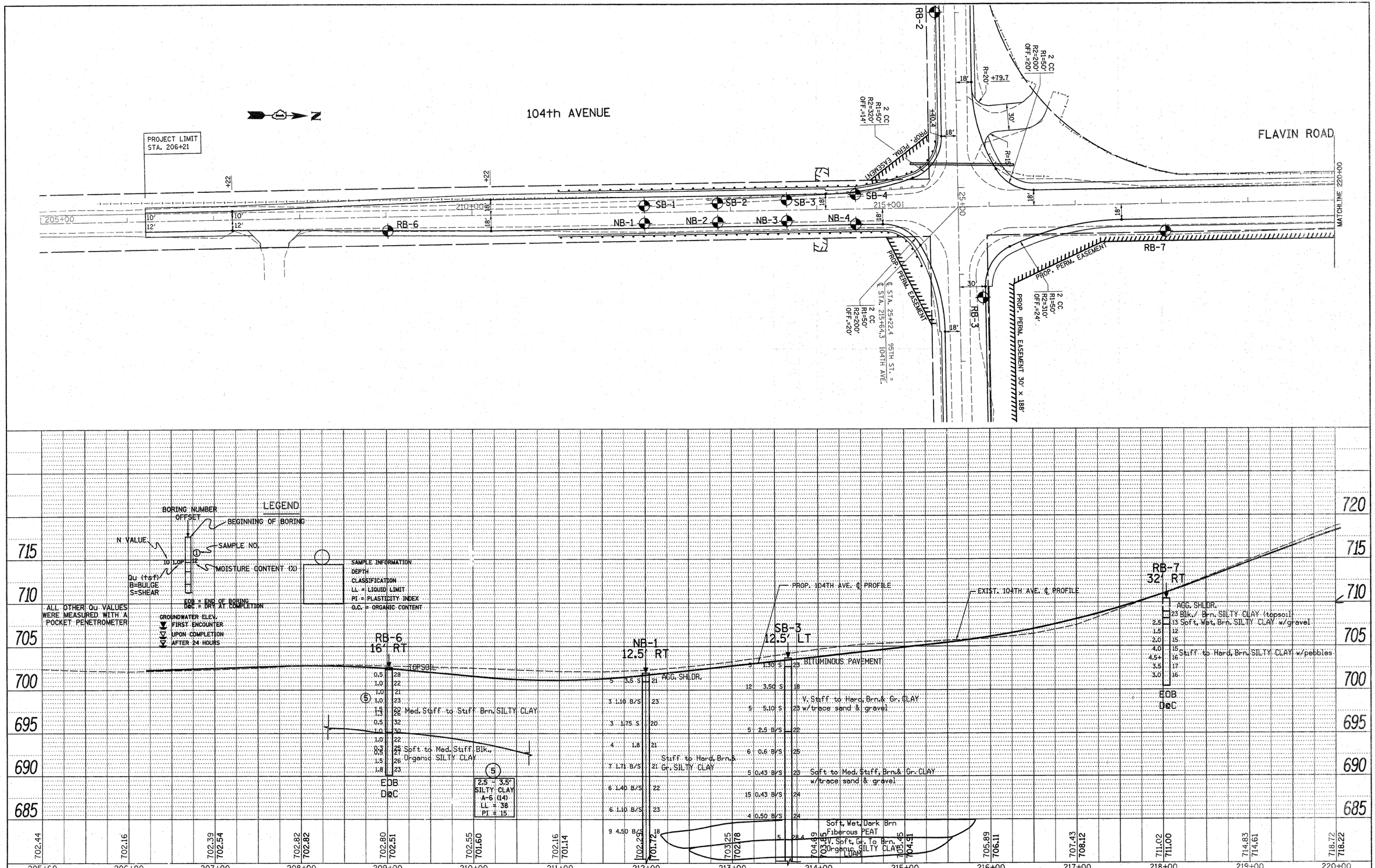

FILE NAME = C:\pw_work\PWIDOT\LISZEKRF\d0159937\P144499-sht-soil.dgn	USER NAME = liszekrf	DESIGNED -	REVISED -	STATE OF ILLINOIS DEPARTMENT OF TRANSPORTATION
		DRAWN -	REVISED -	
	PLOT SCALE = 50.000 ' / IN.	CHECKED -	REVISED -	
	PLOT DATE = 6/8/2010	DATE -	REVISED -	

104th AVENUE / FLAVIN ROAD @ 95th STREET
SOIL PLAN AND PROFILE

SCALE: | SHEET NO. OF SHEETS | STA. TO STA.

F.A.U. RTE.	SECTION	COUNTY	TOTAL SHEETS	SHEET NO.
1566	29R-N-1	COOK	120	70

CONTRACT NO. 62377

ILLINOIS FED. AID PROJECT

PLAN: SURVEYED / PLOTTED / ALIGNMENT CHECKED / R/L OF WAY CHECKED / CADD FILE NAME — NOTE BOOK NO. — DATE

PROFILE: SURVEYED / PLOTTED / GRADES CHECKED / B.M. NOTED / STRUCTURE NOTAT'NS CHK'D — NOTE BOOK NO. — BY — DATE

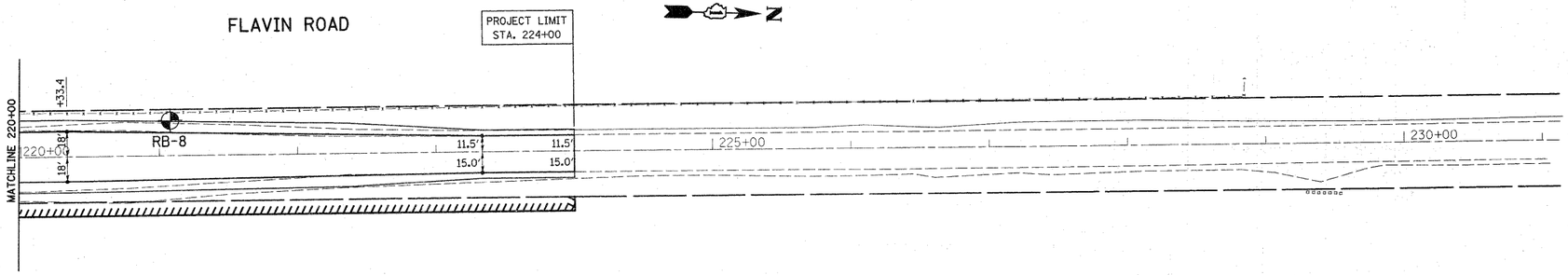

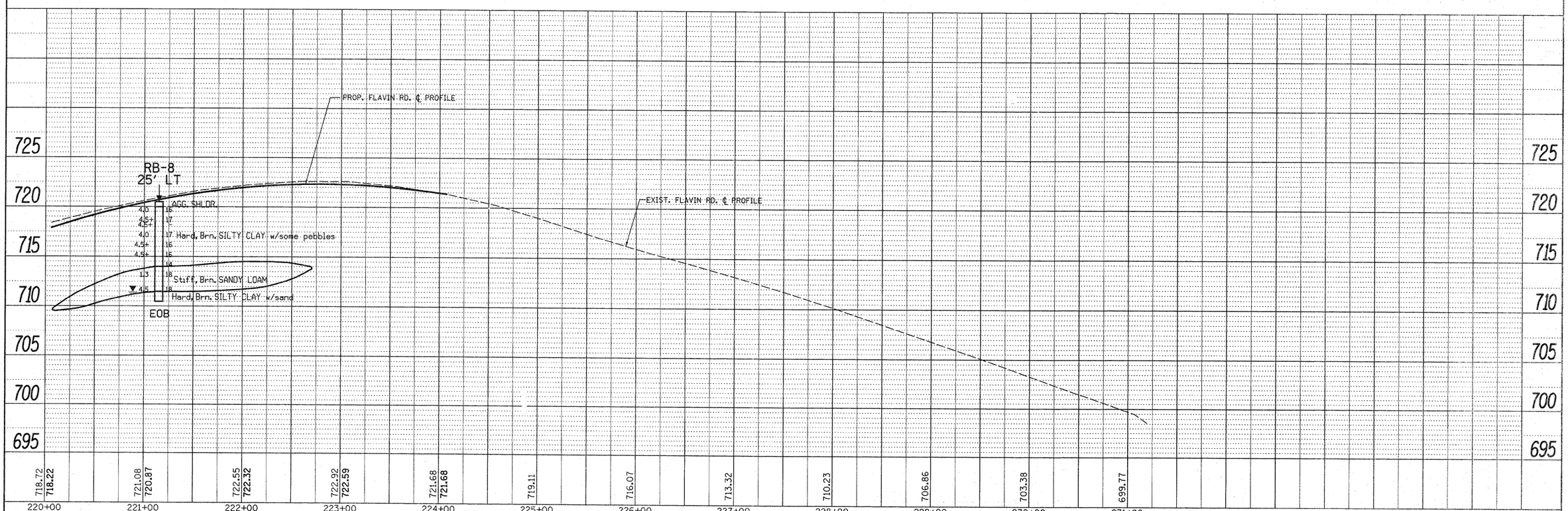

FILE NAME = C:\pw_work\PWIDOT\LISZEKRF\d0159937\P144489-sht-soil.dgn	USER NAME = liszekrf	DESIGNED -	REVISED -
		DRAWN -	REVISED -
	PLOT SCALE = 50.000 ' / IN.	CHECKED -	REVISED -
	PLOT DATE = 6/7/2010	DATE -	REVISED -

STATE OF ILLINOIS
DEPARTMENT OF TRANSPORTATION

104th AVENUE / FLAVIN ROAD
@ 95th STREET
SOIL PLAN AND PROFILE

SCALE: | SHEET NO. OF SHEETS | STA. TO STA.

F.A.U. RTE.	SECTION	COUNTY	TOTAL SHEETS	SHEET NO.
1566	29R-N-1	COOK	120	71

CONTRACT NO. 62377

ILLINOIS FED. AID PROJECT

PLAN: SURVEYED / PLOTTED / ALIGNMENT CHECKED / RT. OF WAY CHECKED / CADD FILE NAME / NOTE BOOK NO. / BY / DATE

PROFILE: SURVEYED / PLOTTED / GRADES CHECKED / B.M. NOTED / STRUCTURE NOTATNS CHKD / NOTE BOOK NO. / BY / DATE

ILLINOIS DEPARTMENT OF TRANSPORTATION
STRUCTURE BORING LOG

Page 1 of 2
Date 6/14/06

ROUTE FAU 1566 (95th Street) DESCRIPTION Proposed Improvements (Contract No. 62377)
SECTION 29R-N-1 STRUCTURE NO. _____ DRILLED BY KL&ES
COUNTY Cook LOCATION 104th Avenue/Flavin Road and 95th Street (Job # D-91-026-02)

Boring No. NB-1
Station 212+00
Offset 12.5' R
Surface El. +701.97+/- M.S.L.

Surf. Wat. El. _____
Groundwater Elev.:
When Drilling Dry
at Completion Dry
After Hrs

Description	Depth	Blows	QU TSF	W %
12" CRUSHED STONE SHOULDER COURSE				
FILL: SILTY CLAY, Brown and Gray, Trace Dark Gray, Trace Sand and Gravel, Very Stiff to Stiff to Hard to Stiff to Very Stiff, Moist (A-6)	2.0	1 2 3	3.50 S	20.9
(Dry Density = 104.9 pcf)	4.0	2 1 2	1.10 B/S	22.8
(Hit rock)	7.0	2 1 2	1.75 S	20.1
(Low Recovery -Took auger sample)	9.0	2 2 3	1.75 P	20.6
(Dry Density = 105.2 pcf)	12.0	2 2 5	1.71 B/S	20.8
(Combined Analysis) (Atterberg Limit)	14.0	2 2 4	1.40 B/S	22.4
	17.0	2 2 4	1.10 B/S	23.0
(Dry Density = 109.2 pcf)	19.0	3 4 5	4.50 B/S	18.0
(Dry Density = 108.6 pcf)	24.0	3 3 6	1.30 B/S	20.7
(Little Dark Brown Clay with fibers from 26'3" to 26.5')	27.0	4 5 6	1.80 S	13.8
(Dry Density = 107.2 pcf)	32.0	2 5 8	3.40 S	17.4
	35.0	5 7 7	3.00 B/S	18.8
	37.0	3 4 6	1.30 B/S	22.7
	39.0	4 5 7	1.60 S	23.0
	41.0	4 6 8	1.10 B/S	19.7
	43.0	5 5	1.60	19.7

N=Standard Penetration Test-Blows per foot to drive 2" O.D. Split Spoon Sampler 12" with 140lb hammer falling 30"
(QU)B=Bulge S=Shear P=Penetration Test
Stations, Depths, Offset, and Elevations are in Feet
Offset is from Centerline of Existing Road
SEECO Job No. 7891G-5

ILLINOIS DEPARTMENT OF TRANSPORTATION
STRUCTURE BORING LOG

Page 2 of 2
Date 6/14/06

ROUTE FAU 1566 (95th Street) DESCRIPTION Proposed Improvements (Contract No. 62377)
SECTION 29R-N-1 STRUCTURE NO. _____ DRILLED BY KL&ES
COUNTY Cook LOCATION 104th Avenue/Flavin Road and 95th Street (Job # D-91-026-02)

Boring No. NB-1
Station 212+00
Offset 12.5' R
Surface El. +701.97+/- M.S.L.

Surf. Wat. El. _____
Groundwater Elev.:
When Drilling Dry
at Completion Dry
After Hrs

Description	Depth	Blows	QU TSF	W %
	43.0	8	2.40 B/S	
33" ORGANIC CLAY, Black, Trace Peat and Fibers, Trace Shells, Medium, Wet (A-7-5) (Organic Content = 8.4%)	45.0	2 3 3	1.10 B 0.60 B	19.7 62.3
CLAY, Gray, Trace Dark Gray, Trace Brown, Trace Sand and Gravel, Stiff, Moist (A-6)	47.0	4 4 7	1.20 S 1.60 B/S	19.1
CLAY, Gray, Trace Sand and Gravel, Stiff to Very Stiff to Hard to Very Stiff, Moist (A-6)	49.0	4 4	1.10 B/S	17.5
(Little Coarse Gravel at 54.5'-55.0')	50.0	6	1.40 B/S	17.8
(Little Coarse Gravel at 56.5')	52.0	6 8 9	2.20 B 2.60 B/S	17.6
	54.0	8 10 13	5.80 B/S	16.6
	57.0	6 8 11	3.50 B/S 4.70 B/S	19.3
	59.0	6 9 14	2.50 B/S 3.30 B	17.7
	61.0	12 16 24	3.20 B	10.4
CLAY LOAM, Gray, Very Stiff, Moist (A-6)	64.0	6 11 18	2.00 B 2.40 B	11.3
CLAY, Gray, Trace Sand and Gravel, Hard to Very Stiff, Moist (A-6)	67.0	7 10 15	4.30 B/S 5.00 B/S	12.9
(Little Coarse Gravel at 71'-72.5')	70.0	9 10 11	2.90 B 4.40 B/S	14.6
	72.0	13 22 22	2.90 B 3.80 S	16.7
End of Boring @ 72.5 feet				

N=Standard Penetration Test-Blows per foot to drive 2" O.D. Split Spoon Sampler 12" with 140lb hammer falling 30"
(QU)B=Bulge S=Shear P=Penetration Test
Stations, Depths, Offset, and Elevations are in Feet
Offset is from Centerline of Existing Road
SEECO Job No. 7891G-5

ILLINOIS DEPARTMENT OF TRANSPORTATION
STRUCTURE BORING LOG

Page 1 of 2
Date 6/14/06

ROUTE FAU 1566 (95th Street) DESCRIPTION Proposed Improvements (Contract No. 62377)
SECTION 29R-N-1 STRUCTURE NO. _____ DRILLED BY KL&ES
COUNTY Cook LOCATION 104th Avenue/Flavin Road and 95th Street (Job # D-91-026-02)

Boring No. NB-2
Station 212+85
Offset 12.5' R
Surface El. +702.56+/- M.S.L.

Surf. Wat. El. _____
Groundwater Elev.:
When Drilling Dry
at Completion Dry
After Hrs

Description	Depth	Blows	QU TSF	W %
10" CRUSHED STONE SHOULDER COURSE				
3" FILL: CLAY LOAM, Dark Gray, Dark Brown and Brown, Trace Gravel, Moist (A-6)	1.0			17.2
FILL: CLAY, Brown, Gray and Trace to Little Dark Gray, Very Stiff to Stiff to Hard to Medium, Moist (A-6)	3.0	3 3 4	3.30 B/S	18.0
(Some Dark Gray and Black and Fibers at 4.5')	5.0	3 2 2	2.73 B/S	21.6
	7.0	2 3 3	3.40 B/S	17.9
(Atterberg Limit)	9.0	3 4 3	1.10 B/S	27.7
	12.0	2 2 2	3.20 B/S	21.3
(Hit Rock-- Low Recovery at 18.5' to 20')	14.0	2 3 4	1.10 S	18.7
	17.0	2 3 5	1.60 B/S	18.9
	19.0	4 3 6	3.50 P	16.6
	22.0	4 3 6	2.80 S	20.6
	24.0	4 5 7	4.20 B/S	21.2
FILL: CLAY LOAM, Brown, Gray, Trace Dark Gray, Trace Sand and Gravel, Medium to Stiff, Moist (A-6) (Atterberg Limit)	27.0	3 3 5	1.60 B/S 0.60 B/S	16.2
	30.0	3 4 5	1.00 B/S	14.7
	32.0	3 3 4	0.70 S	18.1
FILL: CLAY, Brown, Gray, Trace Dark Gray, Trace Sand and Gravel, Medium, Moist (A-6)	35.0	4 5 7	1.60 S	20.6
5" ORGANIC CLAY, Dark Gray With Dark Brown Peat, Soft, Wet (A-7-5)	37.0	1 1 1	1.00 B 0.40 B	19.9 62.3
12" PEAT, Dark Brown, Fiberous, Soft, Wet (A-8)	38.0			301.5
48" ORGANIC SILTY CLAY LOAM, Dark Gray, Very Soft to Medium, Wet (A-7-5) (Organic Content = 4.5%) (Atterberg Limit) (Combined Analysis)	39.0	1 1 1	0.25 P	53.2
	42.0	2 3 3	0.30 B 0.70	55.3

N=Standard Penetration Test-Blows per foot to drive 2" O.D. Split Spoon Sampler 12" with 140lb hammer falling 30"
(QU)B=Bulge S=Shear P=Penetration Test
Stations, Depths, Offset, and Elevations are in Feet
Offset is from Centerline of Existing Road
SEECO Job No. 7891G-5

ILLINOIS DEPARTMENT OF TRANSPORTATION
STRUCTURE BORING LOG

Page 2 of 2
Date 6/14/06

ROUTE FAU 1566 (95th Street) DESCRIPTION Proposed Improvements (Contract No. 62377)
SECTION 29R-N-1 STRUCTURE NO. _____ DRILLED BY KL&ES
COUNTY Cook LOCATION 104th Avenue/Flavin Road and 95th Street (Job # D-91-026-02)

Boring No. NB-2
Station 212+85
Offset 12.5' R
Surface El. +702.56+/- M.S.L.

Surf. Wat. El. _____
Groundwater Elev.:
When Drilling Dry
at Completion Dry
After Hrs

Description	Depth	Blows	QU TSF	W %
CLAY, Gray, Trace Dark Gray, Trace Sand and Gravel, Stiff, Moist (A-6)	43.0	6	BS 1.20 B	21.9
CLAY LOAM, Gray, Trace Dark Gray, Some Sand, Medium, Moist (A-6)	44.0	2 4 4	0.75 P 1.00 P 0.80 B/S	23.5 20.7 19.9
CLAY, Gray and Dark Gray, Some Sand, Trace Shale and Pyrite, Medium, Moist (A-6)	46.0	3 4 7	1.60 B/S 2.10 B/S	17.4
CLAY, Gray and Dark Gray, Trace Sand and Gravel, Medium, Moist (A-6)	49.0	7 7 8	2.90 B/S 3.20 B/S	16.9
CLAY, Gray, Trace Sand and Gravel, Stiff to Very Stiff to Hard to Very Stiff, Moist (A-6)	52.0	6 7 9	3.10 B/S	17.4
	55.0	7 10 13	3.70 B/S	11.3
	57.0	7 9 11	3.20 B/S	13.8
(Hit Rock-- Low Recovery at 61' to 62.5')	60.0	6 7 11	3.20 B/S 5.00 B/S	14.3
	62.0	7 15 24	3.25 P	14.6
(Little Coarse Gravel at 63.5')	65.0	7 8 12	2.90 B/S	18.3
End of Boring @ 65.0 feet				

N=Standard Penetration Test-Blows per foot to drive 2" O.D. Split Spoon Sampler 12" with 140lb hammer falling 30"
(QU)B=Bulge S=Shear P=Penetration Test
Stations, Depths, Offset, and Elevations are in Feet
Offset is from Centerline of Existing Road
SEECO Job No. 7891G-5

ILLINOIS DEPARTMENT OF TRANSPORTATION
STRUCTURE BORING LOG

Page 1 of 2
Date 6/20/06

ROUTE FAU 1566 (95th Street) DESCRIPTION Proposed Improvements (Contract No. 62377)
SECTION 29R-N-1 STRUCTURE NO. _____ DRILLED BY PD&JT
COUNTY Cook LOCATION 104th Avenue/Flavin Road and 95th Street (Job # D-91-026-02)

Boring No. NB-3
Station 213+65
Offset 12.5' R
Surface El. +703.71+/- M.S.L.

Surf. Wat. El. _____
Groundwater Elev.:
When Drilling 53.5'
at Completion 42.4'
After Hrs

Description	Depth	Blows	QU TSF	W %
9" CRUSHED STONE BASE COURSE				
1" FILL: CLAY, Black (A-6)	1.0			
FILL: CLAY, Brown and Gray, Trace Dark Gray, Trace Sand and Gravel, Very Stiff to Stiff to Hard to Stiff to Medium to Very Soft, Moist to Wet (A-6)	2.0	4 4 5	3.20 B/S	21.6
	4.0	3 6 7	3.30 B/S	16.8
	6.0	3 4 5	1.90 B/S	21.4
(Some Black Clay, Trace Fibers at 12.25 feet)	9.0	1 3 4	3.30 B/S	22.2
	12.0	2 3 4	5.50 B/S	20.4
(3" Black Clay with Peat Fibers at 13.75')	14.0	3 4 4	1.30 B/S	43.4 27.9
	17.0	2 3 4	0.70 S	21.7
(Dry Density = 105.5 pcf)	19.0	2 2 3	0.40 B	22.4
30" ORGANIC CLAY, Black, Soft, Wet (A-7-5) (Dry Density = 38.6 pcf)	22.0	1 2 3	0.23 B 0.25 P	20.7 99.2
PEAT, Dark Brown, Fiberous, Soft, Wet (A-8) (Dry Density = 13.4 pcf)	24.0	1 2 3		362.0
18" ORGANIC CLAY, Dark Gray, Trace Fibers, Soft, Wet (A-7-5) (Dry Density = 54.2 pcf)	27.0	1 2 3	0.30 B	330.6 77.9
CLAY, Gray, Trace Sand and Gravel, Medium to Hard to Very Stiff to Stiff to Hard to Very Stiff, Moist (A-6)	29.0	2 3 4	0.90 B/S	21.4
	32.0	3 4 5	1.10 B/S	20.5
	34.0	4 6 9	2.70 B/S	15.3
(Dry Density = 110.3 pcf)	37.0	4 6 10	4.75 B/S	16.1
	39.0	4 6 9	3.30 B/S	19.7
	42.0	5 7	4.00	14.8

N=Standard Penetration Test-Blows per foot to drive 2" O.D. Split Spoon Sampler 12" with 140lb hammer falling 30"
(QU)B=Bulge S=Shear P=Penetration Test
Stations, Depths, Offset, and Elevations are in Feet
Offset is from Centerline of Existing Road
SEECO Job No. 7891G-5

ILLINOIS DEPARTMENT OF TRANSPORTATION
STRUCTURE BORING LOG

Page 2 of 2
Date 6/20/06

ROUTE FAU 1566 (95th Street) DESCRIPTION Proposed Improvements (Contract No. 62377)
SECTION 29R-N-1 STRUCTURE NO. _____ DRILLED BY PD&JT
COUNTY Cook LOCATION 104th Avenue/Flavin Road and 95th Street (Job # D-91-026-02)

Boring No. NB-3
Station 213+65
Offset 12.5' R
Surface El. +703.71+/- M.S.L.

Surf. Wat. El. _____
Groundwater Elev.:
When Drilling 53.5'
at Completion 42.4'
After Hrs

Description	Depth	Blows	QU TSF	W %
	43.0	11	BS	
(Some Coarse Gravel at 46.5')	45.0	5 8 10	4.30 B/S	15.4
	47.0	12 9 13	2.50 B	15.0
	49.0	4 6 9	2.10 B/S	15.6
	52.0	5 7 12	2.60 B/S	15.7
	54.0	6 9 12	2.70 B 3.10 B/S	14.9
	57.0	7 8 12	1.70 B/S	16.8
	59.0	7 11 16	3.20 B/S 4.10 B/S	14.4
	61.0	7 16 31	4.10 B 4.50 B/S	14.2 18.2
SILTY CLAY, Gray, Very Dense, Moist (A-4)	63.0			
SILTY CLAY, Gray, Trace Sand and Gravel, Very Stiff, Moist (A-6)	64.0	8 13 21	3.00 S	17.1 15.5
LOAM, Gray, Little Gravel, Medium Dense, Moist (A-4) (Grain Size)	66.0			
SAND, Gray, Fine Grained, Loose, Saturated (A-3)	67.0	2 9 14	5.00 P	19.3 11.7
SAND and GRAVEL, Gray, Medium Dense, Saturated (A-1-b) (Grain Size at 66.75') (Grain Size at 67.25')	68.0			16.3 12.2
CLAY, Gray, Trace Sand and Gravel, Hard to Very Stiff to Hard, Moist (A-6)	69.0	7 10 13	4.50 P	12.6
	72.0	8 10 14	2.70 B	12.8
	74.0	8 10 15	2.90 B/S 4.60 B/S	12.0
End of Boring @ 75.0 feet	75.0			
(Note: The groundwater elevation at the completion of the borehole is not a true water table level as the drillers injected water down the borehole at approximately 65 feet to stabilize the saturated sand layers from heave.--Field Geotechnical Engineer's Observation)				

N=Standard Penetration Test-Blows per foot to drive 2" O.D. Split Spoon Sampler 12" with 140lb hammer falling 30"
(QU)B=Bulge S=Shear P=Penetration Test
Stations, Depths, Offset, and Elevations are in Feet
Offset is from Centerline of Existing Road
SEECO Job No. 7891G-5

ILLINOIS DEPARTMENT OF TRANSPORTATION
STRUCTURE BORING LOG

Page 1 of 1
Date 6/21/06

ROUTE FAU 1566 (95th Street) DESCRIPTION Proposed Improvements (Contract No. 62377)
SECTION 29R-N-1 STRUCTURE NO. _____ DRILLED BY KL&ES
COUNTY Cook LOCATION 104th Avenue/Flavin Road and 95th Street (Job # D-91-026-02)

Boring No. NB-4
Station 214+45
Offset 17.5' R
Surface El. +704.94+/- M.S.L.

Surf. Wat. El. _____
Groundwater Elev.:
When Drilling 28.5'
at Completion 13'
After Hrs

Description	Depth	Blows	QU TSF	W %
8" CRUSHED STONE SHOULDER COURSE				
FILL: CLAY, Brown and Gray, Trace Sand and Gravel, Stiff to Hard, Moist (A-6)	2.0	4 3 3	1.10 S	21.9
	5.0	9 9 7	4.80 B/S	15.9
FILL: SILTY CLAY, Brown, Gray, Trace to Little Dark Gray, Trace Sand and Gravel, Stiff, Moist (A-6) (Dry Density = 102.4 pcf)	7.0	3 3 4	1.60 B/S	21.4
(Atterberg Limit) (Combined Analysis)	9.0	3 3 4	0.70 S	43.7
18" ORGANIC CLAY LOAM (TOPSOIL), Black, Trace Sand, Medium, Wet (A-7-5) (Organic Content = 5.4%)	10.0			
CLAY, Brown, Gray and Dark Gray, Trace Sand, Medium, Moist (A-6)	12.0	2 2 4	0.30 B	20.5
CLAY, Brown and Gray, Trace Sand and Gravel, Stiff, Moist (A-6)	15.0	3 4 5	1.80 B	26.6
CLAY, Brown and Gray, Trace Sand and Gravel, Very Stiff to Stiff, Moist (A-6) (Trace Brown at 16'-17.5')	17.0	2 3 4	3.30 B/S	16.7
(Dry Density = 112.5 pcf)	19.0	2 3 4	2.30 B/S	17.8
	22.0	4 5	2.30	14.7
(Hit rock--Low recovery at 26'-27.5')	24.0	4 3 5	2.00 B	16.9
	27.0	4 5 6	1.75 B/S	15.4
SAND, Gray, Some Gravel, Medium Dense, Saturated (A-1-b) (Grain Size)	29.0	5 7 7	1.80 B/S	18.2 15.3
CLAY, Gray, Trace Sand and Gravel, Stiff to Very Stiff, Moist (A-6) (Dry Density = 119.8 pcf)	32.0	6 7 9	2.30 B/S	15.4
	34.0	6 7 12	3.10 B/S	16.5
SILTY CLAY, Gray, Very Stiff, Trace Sand and Gravel, Moist (A-6)	36.0	11 12 13	2.60 S	11.7
SAND, Gray, Medium Dense, Saturated (A-3) (Grain Size)	39.0	7 7 9		11.4 32.7
SAND AND GRAVEL, Gray, Coarse Grained, Medium Dense, Saturated (A-1-b) (Grain Size) (1" of Gray Clay at 40 feet) End of Boring @ 40.0 feet	42.0			21.0
(Note: The groundwater elevation at the completion of the borehole is not a true water table level as the drillers injected water down the borehole at approximately 17 feet to stabilize the saturated sand layers from heave.--Field Geotechnical Engineer's Observation)				

N=Standard Penetration Test-Blows per foot to drive 2" O.D. Split Spoon Sampler 12" with 140lb hammer falling 30"
(QU)B=Bulge S=Shear P=Penetration Test
Stations, Depths, Offset, and Elevations are in Feet
Offset is from Centerline of Existing Road
SEECO Job No. 7891G-5

FILE NAME = c:\pw_work\pwidot\steedpa\d0159915\P144499-Design.dgn	USER NAME = steedpa	DESIGNED -	REVISED -
		DRAWN -	REVISED -
	PLOT SCALE = 50.7684 ' / IN.	CHECKED -	REVISED -
	PLOT DATE = 2/3/2011	DATE -	REVISED -

STATE OF ILLINOIS
DEPARTMENT OF TRANSPORTATION

SOIL BORING INFORMATION
95th STREET @ 104th AVENUE/ FLAVIN ROAD
SCALE: SHEET NO. OF SHEETS STA. TO STA.

F.A.U. RTE.	SECTION	COUNTY	TOTAL SHEETS	SHEET NO.
1566	29 R-N-1	COOK	120	72
		CONTRACT NO. 62377		
		ILLINOIS FED. AID PROJECT		

ILLINOIS DEPARTMENT OF TRANSPORTATION
STRUCTURE BORING LOG

Page 1 Of 2
Date 6/13/06

ROUTE FAU 1566 (95th Street) DESCRIPTION Proposed Improvements (Contract No. 62377)
SECTION 29R-N-1 STRUCTURE NO. DRILLED BY KL&ES
COUNTY Cook LOCATION 104th Avenue/Flavin Road and 95th Street (Job # D-91-026-02)

Boring No. SB-1
Station 212+00
Offset 8' L
Surface El. +702.03+/- M.S.L.

Surf. Wat. El.
Groundwater Elev.:
When Drilling Dry
at Completion Dry
After Hrs

DEPTH	BLOWS	QU TSF	W %	DESCRIPTION
1.0				13" BITUMINOUS CONCRETE PAVEMENT
				3" CONCRETE PAVEMENT
2.0		1.75 P	21.8	FILL: CLAY, Brown and Gray, Trace Sand and Gravel, Stiff, Moist (A-6)
3.0				
4.0	6 5 2	1.50 P	25.6	FILL: CLAY, Brown and Gray, Trace Dark Gray, Trace Sand and Gravel, Stiff to Very Stiff to Medium to Very Stiff to Stiff, Moist (A-6)
5.0				(Hit rock at 3.5' to 5')
6.0				
7.0	6 5 3	1.50 P 3.00 P 0.50 P	23.8	(Hit rock at 6' to 7.5'--sample disturbed) (Dry Density = 99.9 pcf) (Little Dark Gray 7-7.5')
8.0				
9.0	7 4 4	1.75 P 3.00 P	19.7	(Hit rock at 8.5' to 9'-Highly disturbed)
10.0				
11.0	4 3 3	2.50 P	18.9	(Hit rock at 11' to 12.5')
12.0				
13.0				
14.0	5 4 3	1.00 P	21.1	(No recovery--switched to wider plug in HSA. Took auger sample)
15.0				
16.0	4 3 4	1.70 B/S	17.1	(Dry Density = 106.0 pcf)
17.0				
18.0				
19.0	2 2 3	1.40 B/S	19.5	FILL: CLAY, Brown and Gray, Trace Sand and Gravel, Stiff, Moist (A-6)
20.0				
21.0				FILL: CLAY, Brown and Gray, Trace Dark Brown and Dark Gray, Trace Sand and Gravel, Very Stiff to Stiff, Moist (A-6) (Little Dark Brown Peat mixed in at 21' to 21.5')
22.0	3 3 5	2.10 B/S	24.7	
23.0				
24.0	3 4 7	2.80 B/S	22.7	
25.0				
26.0				
27.0	3 4 5	1.50 S	19.1	
28.0				
29.0	4 3 7	1.80 S	17.8	
30.0				
31.0				
32.0	3 4 6	2.50 P	18.6	
33.0				
34.0	3 4 4	1.20 S	21.6	
35.0		2.30 B/S		(Trace Brick Fragment at 35 feet)
36.0				
37.0	4 4 6	3.00 S	19.0	
38.0				
39.0	4 5 6	1.50 B	20.2	
40.0				
41.0	7 10	1.50 S	12.6	(Little Black, Trace Fibers Mixed in at 39.5')
42.0				

N=Standard Penetration Test-Blows per foot to drive 2" O.D.
Split Spoon Sampler 12" with 140lb hammer falling 30"

(QU)B=Bulge S=Shear P=Penetration Test
Stations, Depths, Offset, and Elevations are in Feet
Offset is from Centerline of Existing Road

SEECO Job No. 7891G-5

ILLINOIS DEPARTMENT OF TRANSPORTATION
STRUCTURE BORING LOG

Page 2 Of 2
Date 6/13/06

ROUTE FAU 1566 (95th Street) DESCRIPTION Proposed Improvements (Contract No. 62377)
SECTION 29R-N-1 STRUCTURE NO. DRILLED BY KL&ES
COUNTY Cook LOCATION 104th Avenue/Flavin Road and 95th Street (Job # D-91-026-02)

Boring No. SB-1
Station 212+00
Offset 8' L
Surface El. +702.03+/- M.S.L.

Surf. Wat. El.
Groundwater Elev.:
When Drilling Dry
at Completion Dry
After Hrs

DEPTH	BLOWS	QU TSF	W %	DESCRIPTION
	18	3.80 S		
43.0				
44.0	5 8 8	1.60 B/S	17.1	
45.0				
46.0				30" ORGANIC CLAY, Black, Medium, Wet (A-7-5)
47.0	1 1 2	0.50 B	52.3 51.4 51.1	(Dry Density = 73.3 pcf) (Organic Content = 5.3%) (Atterberg Limit)
48.0				
49.0	3 2 5	0.50 B 0.43 B	51.3 24.0	18" ORGANIC CLAY, Dark Gray, Trace Fibers, Medium, Wet (A-7-5)
50.0				CLAY, Gray, Trace Dark Gray, Soft, Moist (A-7-6) (Organic Content = 2.2%)
51.0	1 5 5	2.00 B/S	19.0	CLAY, Gray, Trace Sand and Gravel, Very Stiff to Stiff to Hard to Very Stiff, Moist (A-6)
52.0				
53.0				
54.0	4 4 7	1.50 B	18.6	SILTY CLAY, Gray, Trace Sand and Gravel, Very Stiff, Moist (A-6)
55.0				
56.0				CLAY, Gray, Trace Sand and Gravel, Hard to Very Stiff, Moist (A-6) (Contains Coarse Gravel at 76' to 77.5')
57.0	7 12 13	3.80 B/S	15.2	
58.0				
59.0	5 9 12	4.50 B/S	16.1	End of Boring @ 80.0 feet
60.0				
61.0				
62.0	7 10 15	3.50 B/S	15.5	
63.0				
64.0	10 13 17	3.80 B/S 5.20 B/S	12.1	
65.0				
66.0				
67.0	9 10 15	4.70 B/S	14.5	
68.0				
69.0	5 6 11	4.00 B	14.3	
70.0				
71.0				
72.0	6 9 12	3.90 B/S	14.9	
73.0				
74.0	7 7 9	2.60 B/S 2.10 S	14.2 13.5	
75.0				
76.0	9 12 16	4.00 B	12.7	
77.0				
78.0				
79.0	7 11 18	3.00 B	14.4	
80.0				
81.0				
82.0				
83.0				
84.0				

N=Standard Penetration Test-Blows per foot to drive 2" O.D.
Split Spoon Sampler 12" with 140lb hammer falling 30"

(QU)B=Bulge S=Shear P=Penetration Test
Stations, Depths, Offset, and Elevations are in Feet
Offset is from Centerline of Existing Road

SEECO Job No. 7891G-5

ILLINOIS DEPARTMENT OF TRANSPORTATION
STRUCTURE BORING LOG

Page 1 Of 2
Date 6/12/06

ROUTE FAU 1566 (95th Street) DESCRIPTION Proposed Improvements (Contract No. 62377)
SECTION 29R-N-1 STRUCTURE NO. DRILLED BY KL&ES
COUNTY Cook LOCATION 104th Avenue/Flavin Road and 95th Street (Job # D-91-026-02)

Boring No. SB-2
Station 212+85
Offset 9.5' L
Surface El. +702.77+/- M.S.L.

Surf. Wat. El.
Groundwater Elev.:
When Drilling Dry
at Completion Dry
After Hrs

DEPTH	BLOWS	QU TSF	W %	DESCRIPTION
1.0				14" BITUMINOUS CONCRETE PAVEMENT
	2 3 3	1.90 B/S	19.8	2" CRUSHED STONE BASE COURSE FILL: SILTY CLAY, Brown and Gray, Trace Sand and Gravel, Stiff to Very Stiff to Hard, Moist (A-6)
3.0				
4.0	2 2 3	2.70 B/S	20.1	(Dry Density = 109.1 pcf) (Combined Analysis)
5.0				
6.0				
7.0	4 3 6	5.00 B/S	16.7 22.4	FILL: CLAY, Brown, Gray and Dark Gray, Trace Sand and Gravel, Very Stiff, Moist (A-6)
8.0				
9.0	2 1 2	1.50 P 0.50 P	24.8 45.3	FILL: CLAY, Gray, Trace Dark Gray, Trace Sand and Gravel, Stiff, Moist (A-6) FILL: PEAT, Dark Brown and Dark Gray, Some Gray Clay, Trace Sand, Medium, Wet (A-8)
10.0				
11.0	2 2 3	1.10 B/S	19.5	FILL: CLAY, Brown and Gray, Trace Sand and Gravel, Stiff to Medium, Moist (A-6)
12.0				
13.0				
14.0	2 2 2	0.90 B/S	20.8	(Atterberg Limits)
15.0				
16.0				
17.0	2 3 4	2.00 P 4.00 P	20.2	FILL: CLAY, Brown and Gray, Little to Trace Dark Brown, Trace Sand and Gravel, Very Stiff to Hard to Stiff, Moist (A-6)
18.0				
19.0	2 3 5	1.50 S	18.1	(Dry Density = 106.1 pcf)
20.0				
21.0				
22.0	3 3 5	1.50 S	23.1	
23.0				
24.0	3 3 5	1.60 S	21.7	FILL: CLAY, Brown and Gray, Trace Sand and Gravel, Stiff to Very Stiff, Moist (A-6) (Dry Density = 104.0 pcf)
25.0				
26.0	3 3 4	2.10 B/S 1.25 P	20.2 21.9	FILL: CLAY, Brown and Gray, Little Dark Gray, Trace Sand and Gravel, Stiff, Moist (A-6)
27.0				
28.0				
29.0	4 5 5	1.50 B/S	20.2	(Dry Density = 108.1 pcf)
30.0				
31.0				
32.0	3 5 6	2.70 S	19.9	FILL: CLAY, Brown and Gray, Trace Sand and Gravel, Very Stiff, Moist (A-6) (Dry Density = 105.7 pcf)
33.0				
34.0	3 5 7	2.80 B/S	16.5	(Dry Density = 112.5 pcf)
35.0				
36.0	6 6 8	2.40 B/S	18.0	
37.0				
38.0				
39.0	3 4 6	0.50 B	142.3 44.2	12" PEAT, Dark Brown, Fibrous, Soft, Wet (A-8) (Dry Density = 31.4 pcf) 18" ORGANIC CLAY, Black, Medium, Wet (A-7-5) (Dry Density = 74.4 pcf) (Organic Content = 5.9%)
40.0				
41.0	2 3	0.52	21.9	CLAY, Gray, Trace Sand and Gravel, Medium, Moist (A-6)
42.0				

N=Standard Penetration Test-Blows per foot to drive 2" O.D.
Split Spoon Sampler 12" with 140lb hammer falling 30"

(QU)B=Bulge S=Shear P=Penetration Test
Stations, Depths, Offset, and Elevations are in Feet
Offset is from Centerline of Existing Road

SEECO Job No. 7891G-5

ILLINOIS DEPARTMENT OF TRANSPORTATION
STRUCTURE BORING LOG

Page 2 Of 2
Date 6/12/06

ROUTE FAU 1566 (95th Street) DESCRIPTION Proposed Improvements (Contract No. 62377)
SECTION 29R-N-1 STRUCTURE NO. DRILLED BY KL&ES
COUNTY Cook LOCATION 104th Avenue/Flavin Road and 95th Street (Job # D-91-026-02)

Boring No. SB-2
Station 212+85
Offset 9.5' L
Surface El. +702.77+/- M.S.L.

Surf. Wat. El.
Groundwater Elev.:
When Drilling Dry
at Completion Dry
After Hrs

DEPTH	BLOWS	QU TSF	W %	DESCRIPTION
	4	B		
43.0				
44.0	3 3 4	0.62 B/S	18.7	SANDY CLAY, Gray, Medium, Moist (A-6) (Dry Density = 117.2 pcf)
45.0				
46.0	4 5 7	2.30 B/S	14.9	CLAY, Gray, Trace Sand and Gravel, Very Stiff to Hard, Moist (A-6) (Dry Density = 115.8 pcf)
47.0				
48.0				
49.0	6 10 12	5.20 B/S	15.9	(Dry Density = 118.9 pcf)
50.0				
51.0				
52.0	6 8 9	5.00 B/S	16.2	
53.0				
54.0	7 12 13	5.10 B/S	13.0	
55.0				
56.0				
57.0	5 7 9	4.00 B	14.8	(Dry Density = 119.7 pcf)
58.0				
59.0	5 8 12	4.30 B	14.3	
60.0				
61.0				
62.0	9 9 13	3.60 B/S	14.0	
63.0				
64.0	7 9 12	2.70 B/S 4.90 B/S	12.9	(Dry Density = 121.6 pcf)
65.0				
66.0				
67.0	13 15 16	8.10 B/S	13.3	
68.0				
69.0	9 10 14	4.30 B/S	13.8	(Dry Density = 123.5 pcf)
70.0				
71.0				
72.0				
73.0				
74.0				
75.0				
76.0				
77.0				
78.0				
79.0				
80.0				End of Boring @ 80.0 feet
81.0				
82.0				
83.0				
84.0				

N=Standard Penetration Test-Blows per foot to drive 2" O.D.
Split Spoon Sampler 12" with 140lb hammer falling 30"

(QU)B=Bulge S=Shear P=Penetration Test
Stations, Depths, Offset, and Elevations are in Feet
Offset is from Centerline of Existing Road

SEECO Job No. 7891G-5

ILLINOIS DEPARTMENT OF TRANSPORTATION
STRUCTURE BORING LOG

Page 1 Of 1
Date 6/12/06

ROUTE FAU 1566 (95th Street) DESCRIPTION Proposed Improvements (Contract No. 62377)
SECTION 29R-N-1 STRUCTURE NO. DRILLED BY KL&ES
COUNTY Cook LOCATION 104th Avenue/Flavin Road and 95th Street (Job # D-91-026-02)

Boring No. SB-3
Station 213+65
Offset 12' L
Surface El. +703.75+/- M.S.L.

Surf. Wat. El.
Groundwater Elev.:
When Drilling Dry
at Completion Dry
After Hrs

DEPTH	BLOWS	QU TSF	W %	DESCRIPTION
1.0				12" BITUMINOUS CONCRETE PAVEMENT
2.0	2 2 3	1.30 S	23.0	FILL: CLAY, Brown and Gray, Trace Sand and Gravel, Stiff to Very Stiff to Hard, Moist (A-6)
3.0				
4.0	4 5 7	3.50 S	18.1	(Dry Density 108.7 pcf) (Combined Analysis) (Atterberg Limit)
5.0				
6.0				
7.0	3 2 3	2.75 P 0.25 P 5.10 S	23.2 19.0	(3" Fill: Sandy Clay at 6.9" to 7')
8.0				
9.0	2 2 3	2.50 B/S	22.3	FILL: CLAY, Brown and Gray, Trace Sand and Gravel, Very Stiff to Medium to Soft to Medium, Moist (A-6) (Dry Density 103.6 pcf)
10.0				
11.0				
12.0	1 2 4	0.60 B/S	25.4	
13.0				
14.0	1 2 3	0.42 B/S	22.5	
15.0				
16.0	4 8 7	0.43 B/S	24.1	(Low Recovery--Hit rock while sampling at 16.5'-17.5')
17.0				
18.0				
19.0	2 1 3	0.50 B/S	23.5	
20.0				(Trace Dark Gray at 20 feet)
21.0				
22.0	2 2 3		284.3	24" PEAT, Dark Brown, Fibrous, Soft, Wet (A-8) (Dry Density 18.4 pcf)
23.0				
24.0	1 2 4	0.20 B 3.30 B/S	21.0 18.4	ORGANIC SILTY CLAY LOAM, Dark Gray to Dark Brown, Trace Sand and Gravel, Trace Fibers, Very Soft, Moist (A-5) (Dry Density 88.39 pcf) (Combined Analysis) (Organic Content = 1.9%)
25.0				CLAY, Gray, Trace Sand and Gravel, Very Stiff to Stiff to Hard to Very Stiff, Moist (A-6)
26.0	2 3 3	1.20 B/S 1.50 B/S	23.0	(Dry Density 105.8 pcf)
27.0				
28.0				
29.0	3 3 5	1.10 B	19.8	
30.0				
31.0				
32.0	5 5 9	3.30 B/S	15.6	(Dry Density 117.5 pcf)
33.0				
34.0	4 4 6	3.10 B	18.8	
35.0				
36.0				
37.0	4 6 6	4.60 B/S	15.5	(Dry Density 119.0 pcf)
38.0				
39.0	4 6 8	2.80 B/S	17.0	
40.0				
41.0				End of Boring @ 40.0 feet
42.0				

N=Standard Penetration Test-Blows per foot to drive 2" O.D.
Split Spoon Sampler 12" with 140lb hammer falling 30"

(QU)B=Bulge S=Shear P=Penetration Test
Stations, Depths, Offset, and Elevations are in Feet
Offset is from Centerline of Existing Road

SEECO Job No. 7891G-5

ILLINOIS DEPARTMENT OF TRANSPORTATION
STRUCTURE BORING LOG

Page 1 Of 1
Date 6/12/06

ROUTE FAU 1566 (95th Street) DESCRIPTION Proposed Improvements (Contract No. 62377)
SECTION 29R-N-1 STRUCTURE NO. DRILLED BY KL&ES
COUNTY Cook LOCATION 104th Avenue/Flavin Road and 95th Street (Job # D-91-026-02)

Boring No. SB-4
Station 214+45
Offset 17' L
Surface El. +704.82+/- M.S.L.

Surf. Wat. El.
Groundwater Elev.:
When Drilling 25.5'
at Completion 19.33'
After Hrs

DEPTH	BLOWS	QU TSF	W %	DESCRIPTION
1.0				11" BITUMINOUS CONCRETE PAVEMENT
	4 4 5	3.50 B	13.6	2" CRUSHED STONE BASE COURSE FILL: CLAY, Brown and Gray, Trace Sand and Gravel, Very Stiff to Stiff, Moist (A-6)
3.0				
4.0	2 2 2	2.25 P 1.50 P	21.2	(Dry Density = 109.4 pcf)
5.0				
6.0				
7.0	2 2 4	1.50 B/S	19.3	
8.0				
9.0	2 3 6	0.60 B	26.7	39" CLAY (Transition Material), Dark Gray, Trace Brown, Trace Sand and Gravel, Medium, Moist (A-6) (Dry Density = 93.4 pcf) (Organic Content = 2.6%)
10.0				
11.0				
12.0	3 5 7	3.60 B/S	20.1	CLAY, Brown and Gray, Trace Sand and Gravel, Very Stiff to Hard to Stiff, Moist (A-6) (Dry Density = 102.64 pcf)
13.0				
14.0	5 6 9	6.80 B/S	20.3	(Trace Dark Gray at 13.5'-14')
15.0				
16.0				
17.0	9 10 15	1.50 P	24.7	(Hit rock--Low recovery)
18.0				
19.0	5 6 9	6.40 B/S	12.4	CLAY, Brownish Gray, Trace Sand and Gravel, Hard, Moist (A-6) (Dry Density = 123.5 pcf)
20.0				
21.0				
22.0	5 8 9	3.00 B	14.3	SILTY CLAY, Gray, Trace Sand and Gravel, Very Stiff, Moist (A-6)
23.0				
24.0	3 5 7	2.40 B	15.3	(Dry Density = 119.5 pcf) (Combined Analysis)
25.0				
26.0	8 5 6	2.90 B	20.5 12.9	SANDY LOAM, Brown and Gray, Some Gravel, Medium Dense, Saturated (A-2-4) (Grain Size) SILTY CLAY LOAM, Gray, Little Sand, Trace Gravel, Very Stiff, Moist (A-6)
27.0				
28.0				
29.0	3 4 6	3.40 B	14.1	(Dry Density = 125.5 pcf) (Combined Analysis) (Atterberg Limits)
30.0				
31.0				
32.0	6 7 8	2.50 B	15.5	
33.0				
34.0	6 7		19.9	SILT, Gray, Medium Dense, Moist (A-4) (Dry Density = 109.8 pcf)
35.0	15		13.9	
36.0	6 10 11	4.10 S	16.4 12.8	SANDY LOAM, Brownish Gray, Some Gravel, Medium Dense, Saturated (A-1-b) (Grain Size) (SANDY CLAY LOAM (A-6), Brownish Gray, Little Gravel at 36'-36.2'--Grain Size) CLAY, Brownish Gray, Trace Sand and Gravel, Hard to Very Stiff, Moist (A-6)
37.0				
38.0				
39.0	7 5 8	2.20 B	14.7	(Dry Density = 124.2 pcf)
40.0				End of Boring @ 40.0 feet
41.0				
42.0				

N=Standard Penetration Test-Blows per foot to drive 2" O.D.
Split Spoon Sampler 12" with 140lb hammer falling 30"

(QU)B=Bulge S=Shear P=Penetration Test
Stations, Depths, Offset, and Elevations are in Feet
Offset is from Centerline of Existing Road

SEECO Job No. 7891G-5

FILE NAME = c:\pw_work\pwidot\steedpa\d0159915\P144099-Design.dgn	USER NAME = steedpa	DESIGNED -	REVISED -	STATE OF ILLINOIS DEPARTMENT OF TRANSPORTATION	SOIL BORING INFORMATION 95th STREET @ 104th AVENUE/ FLAVIN ROAD	F.A.U. RTE. 1566	SECTION 29 R-N-1	COUNTY COOK	TOTAL SHEETS 120	SHEET NO. 73
		DRAWN -	REVISED -					CONTRACT NO. 62377		
	PLOT SCALE = 50.7684 ' / IN.	CHECKED -	REVISED -		SCALE: SHEET NO. OF SHEETS STA. TO STA.		ILLINOIS FED. AID PROJECT			
	PLOT DATE = 2/3/2011	DATE -	REVISED -							

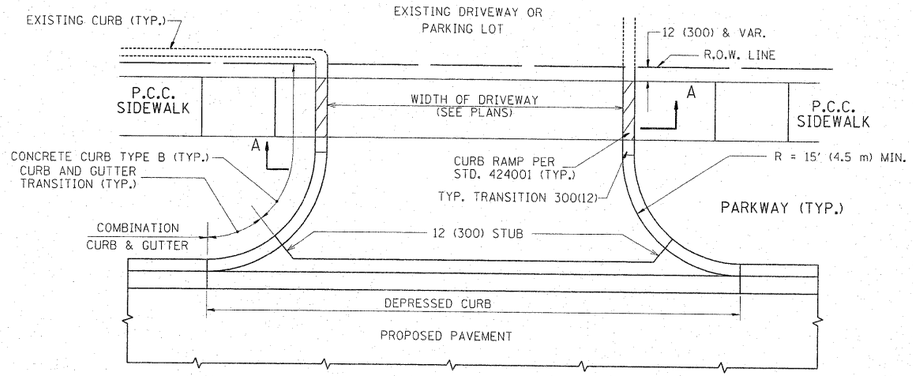

WITH CONCRETE CURB, TYPE B

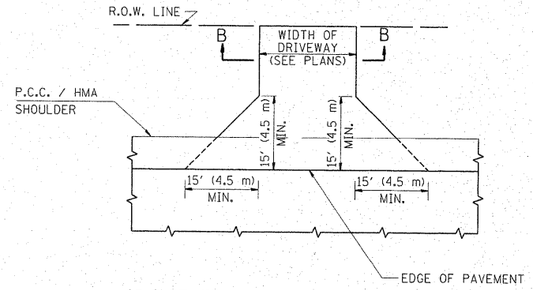

ADJACENT TO P.C.C. / HMA SHOULDER

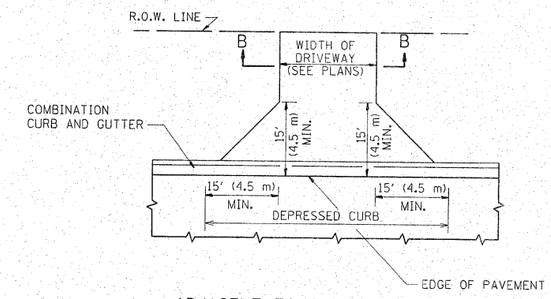

ADJACENT TO CURB AND GUTTER

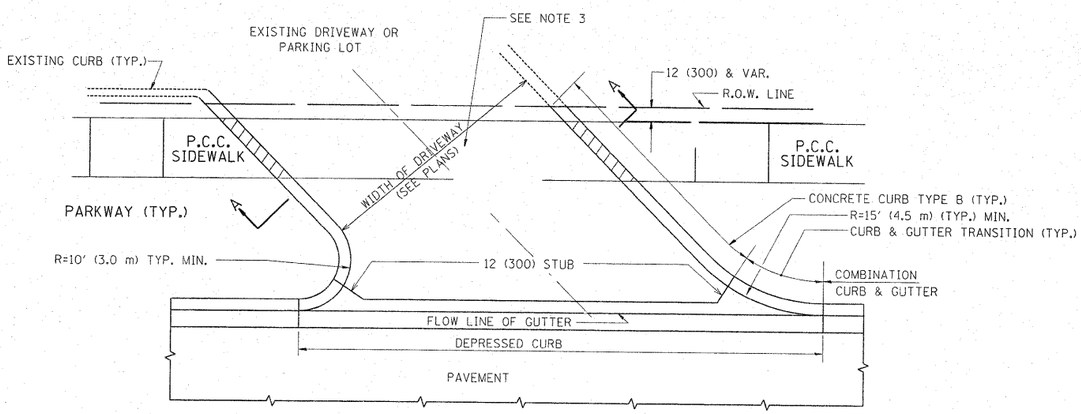

WITH CONCRETE CURB, TYPE B

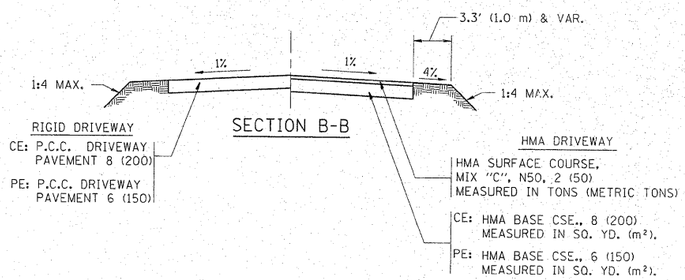

SECTION B-B

RURAL FIELD ENTRANCE (FE)

HMA SURFACE COURSE, MIX "C", N50, 2 (50) MEASURED IN TONS (METRIC TONS)

AGGREGATE BASE CSE., TYPE B, 8 (200) MEASURED IN SQ. YD. (m²).

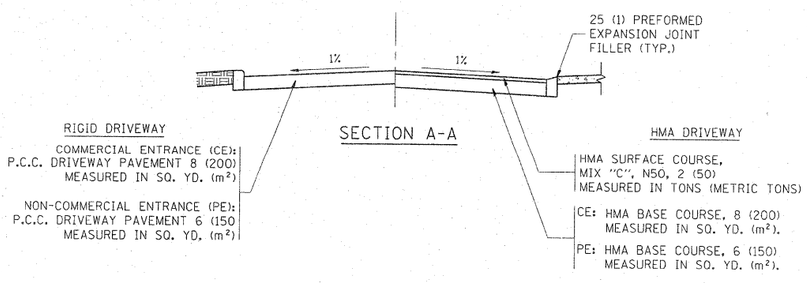

SECTION A-A

GENERAL NOTES:

DRIVEWAY SLOPES, LOCATIONS, & GEOMETRIC LAYOUT SHALL BE IN ACCORDANCE WITH THE LATEST EDITION OF THE "HANDBOOK FOR POLICY ON PERMITS FOR ACCESS DRIVEWAYS TO STATE HIGHWAYS". FOR FURTHER LAYOUT REQUIREMENTS, REFER TO ILLUSTRATIONS IN THE PERMIT HANDBOOK. DRIVEWAYS SHALL BE REPLACED IN KIND, UNLESS OTHERWISE NOTED ON THE PLANS.

COMMERCIAL DRIVEWAYS SHALL BE CONSTRUCTED WITH CONCRETE CURB, TYPE B RETURNS EXCEPT WHEN THE SIDEWALK EDGE IS 4 FEET (1.2 METERS) OR LESS FROM THE BACK OF CURB, CONSTRUCT A FLARE DRIVEWAY WITHOUT CURB.

THE RESIDENT ENGINEER SHALL CONTACT THE TRAFFIC PERMIT OFFICE AT 847/ 705-4131 FOR ANY QUESTIONS ON DRIVEWAYS SHOWN IN THE PLANS; SPECIFICALLY IN REFERENCE TO ADDITIONAL AND/OR RELOCATION/REMOVAL OF A DRIVEWAY.

COMBINATION CONCRETE CURB & GUTTER SHALL BE MEASURED STRAIGHT ACROSS THE DRIVEWAY. NO ADDITIONAL COMPENSATION WILL BE ALLOWED FOR THE CURB & GUTTER TRANSITION.

1 (25) PREFORMED EXPANSION JOINT FILLER WILL NOT BE PAID SEPARATELY, BUT SHALL BE CONSIDERED INCLUDED IN THE COST OF THE P.C.C. DRIVEWAY PAVEMENT OR P.C.C. SIDEWALK.

WHEN THE P.C.C. SIDEWALK EXTENDS THROUGH THE DRIVEWAY, THE THICKNESS OF THE SIDEWALK IN THE DRIVEWAY AREA SHALL BE THE SAME AS THE DRIVEWAY THICKNESS. SIDEWALK WILL BE PAID FOR AS P.C.C. SIDEWALK OF THE THICKNESS SPECIFIED. SIDEWALK CROSS SLOPE THRU DRIVEWAY AREA TO BE A MAXIMUM OF 1:50.

FILE NAME = c:\pw_work\pwidot\steedpa\d0159915\DistStd.dgn	USER NAME = steedpa	DESIGNED - R. SHAH	REVISED - M. GOMEZ 04-06-01	STATE OF ILLINOIS DEPARTMENT OF TRANSPORTATION	DRIVEWAY DETAILS – DISTANCE BETWEEN R.O.W. AND FACE OF CURB & EDGE OF SHOULDER >= 15' (4.5 m)	F.A.U. RTE.	SECTION	COUNTY	TOTAL SHEETS	SHEET NO.
		DRAWN -	REVISED - P. LaFLUER 04-15-03			1566	29 R-N-1	COOK	120	74
	PLOT SCALE = 50.7684 ' / IN.	CHECKED -	REVISED - R. BORO 01-01-07			BD0156-07 (BD-01)		CONTRACT NO. 62377		
	PLOT DATE = 2/3/2011	DATE - 11-04-95	REVISED - R. BORO 06-11-08		SCALE: NONE / SHEET NO. 1 OF 1 SHEETS / STA. TO STA.	FED. ROAD DIST. NO. 1	ILLINOIS	FED. AID PROJECT		

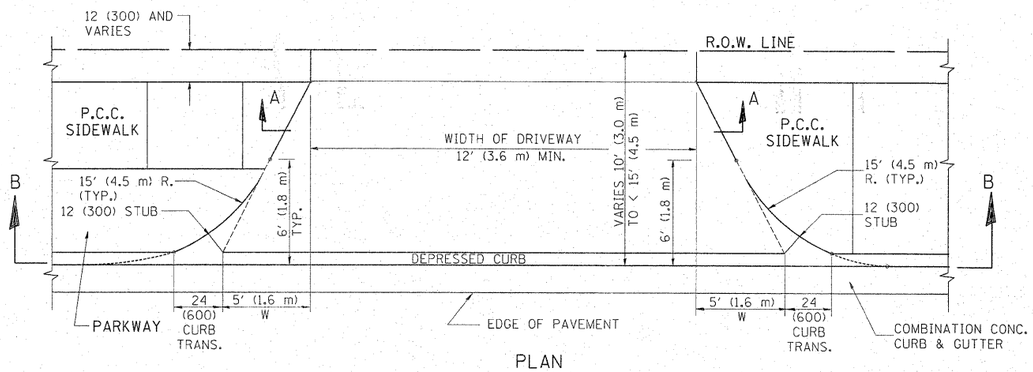

PLAN

10' (3.0 m) TO < 15' (4.5 m)

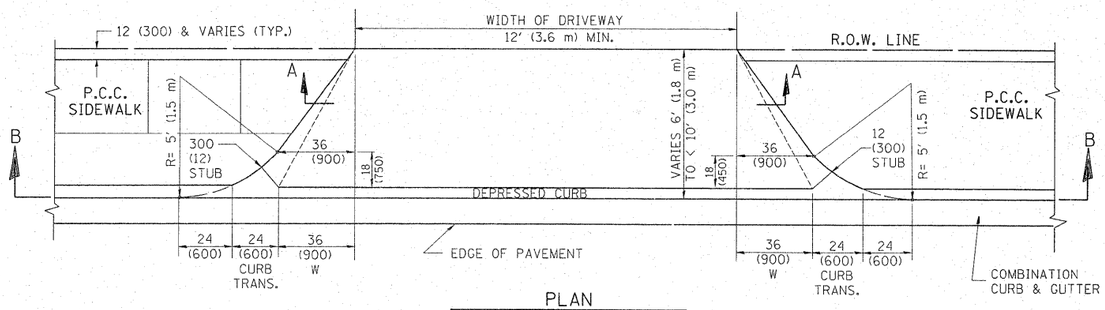

PLAN

6' (1.8 m) TO < 10' (3.0 m)

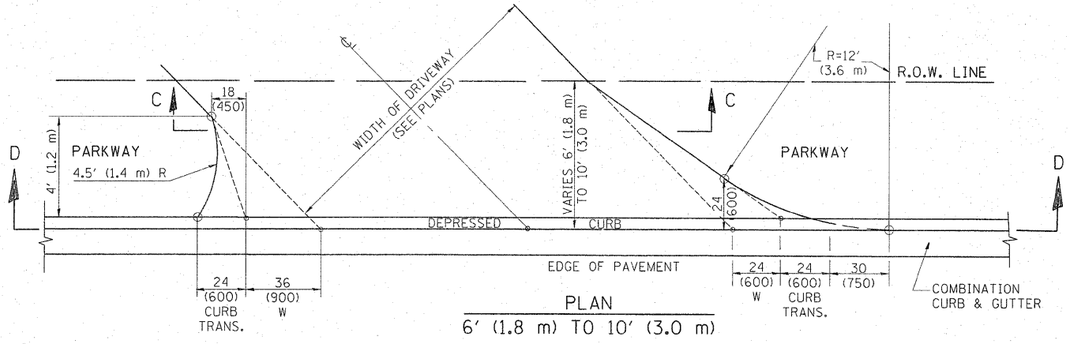

PLAN

6' (1.8 m) TO 10' (3.0 m)

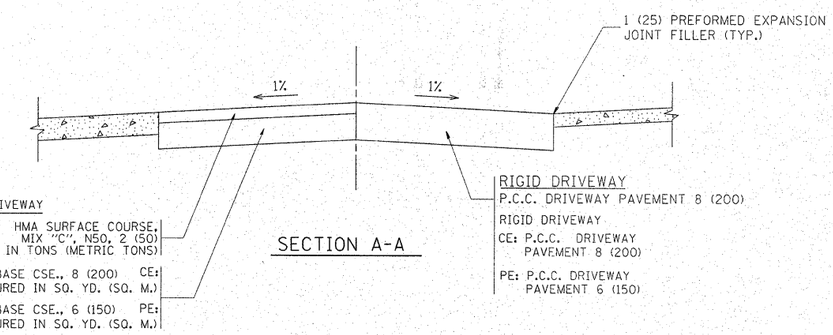

SECTION A-A

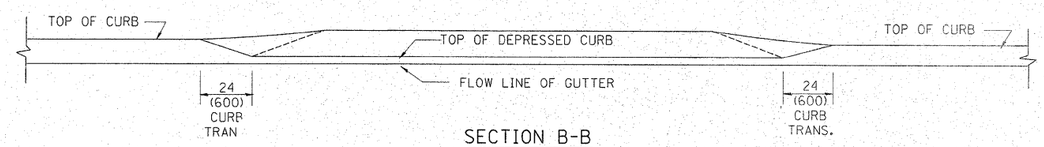

SECTION B-B

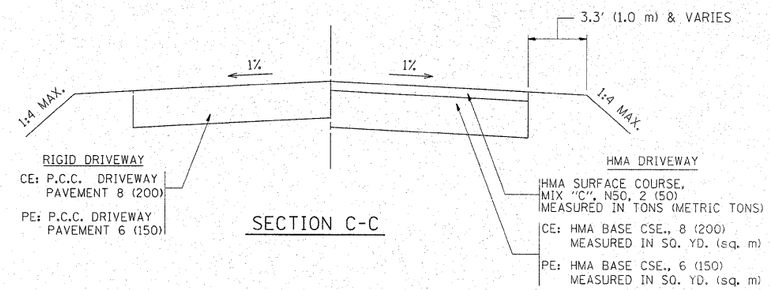

SECTION C-C

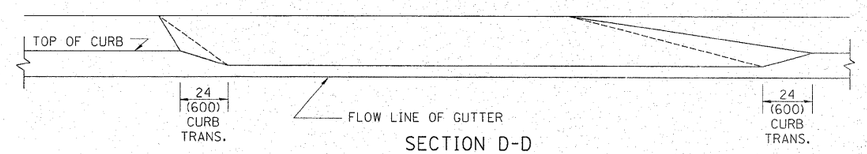

SECTION D-D

GENERAL NOTES

DRIVEWAY SLOPES, LOCATIONS, & GEOMETRIC LAYOUT SHALL BE IN ACCORDANCE WITH THE LATEST EDITION OF THE "HANDBOOK FOR POLICY ON PERMITS FOR ACCESS DRIVEWAYS TO STATE HIGHWAYS". FOR FURTHER LAYOUT REQUIREMENTS, REFER TO ILLUSTRATION 10 IN THE PERMIT HANDBOOK. WHERE SIDEWALKS EXIST, DRIVEWAYS SHALL BE REPLACED WITH RIGID PAVEMENT. WHERE NO SIDEWALKS EXIST, DRIVEWAYS SHALL BE REPLACED IN KIND. SIDEWALK CROSS SLOPE THRU DRIVEWAY AREA TO BE A MAXIMUM OF 1:50.

WHEN THE DISTANCE BETWEEN R.O.W. AND THE BACK OF CURB IS EQUAL TO OR LESS THAN 8' (2.4 m), THE P.C.C. SIDEWALK SHALL EXTEND TO THE BACK OF CURB.

THE RESIDENT ENGINEER SHALL CONTACT THE TRAFFIC PERMIT OFFICE AT 847/ 705-4131 FOR ANY QUESTIONS ON DRIVEWAYS SHOWN IN THE PLANS; SPECIFICALLY IN REFERENCE TO ADDITIONAL AND/OR RELOCATION/REMOVAL OF A DRIVEWAY.

COMBINATION CONCRETE CURB & GUTTER SHALL BE MEASURED STRAIGHT ACROSS THE DRIVEWAY. NO ADDITIONAL COMPENSATION WILL BE ALLOWED FOR THE CURB & GUTTER TRANSITION.

THE 1 (25) PREFORMED EXPANSION JOINT FILLER WILL NOT BE PAID SEPARATELY, BUT SHALL BE CONSIDERED INCLUDED IN THE COST OF THE P.C.C. DRIVEWAY PAVEMENT OR P.C.C. SIDEWALK.

"W" VARIES FROM 36 (900) TO 5' (1.5 m) PROPORTIONAL TO THE LENGTH (L), FROM 6' (1.8 m) TO 10' (3 m).

ALL DIMENSIONS ARE IN INCHES (MILLIMETERS) UNLESS OTHERWISE NOTED.

FILE NAME = c:\pw_work\pwidot\steedpa\d0159915\DistSdd.dgn	USER NAME = steedpa	DESIGNED - R. SHAH	REVISED - T. HOLTZ 04-08-97	STATE OF ILLINOIS DEPARTMENT OF TRANSPORTATION	DRIVEWAY DETAILS DISTANCE BETWEEN ROW AND FACE OF CURB < 15' (4.5 m)	F.A.U. RTE.	SECTION	COUNTY	TOTAL SHEETS	SHEET NO.
	PLOT SCALE = 50.7684 ' / IN.	DRAWN -	REVISED - M. GOMEZ 04-06-01			1566	29 R-N-1	COOK	120	75
	PLOT DATE = 2/3/2011	CHECKED -	REVISED - P. LaFLEUR 04-15-03			BD400-02 (BD-02)		CONTRACT NO. 62377		
		DATE - 11-06-95	REVISED - R. BORO 01-01-07		SCALE: NONE / SHEET NO. 1 OF 1 SHEETS / STA. / TO STA.	FED. ROAD DIST. NO. 1	ILLINOIS	FED. AID PROJECT		

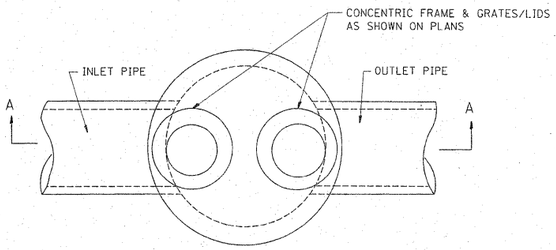

PLAN

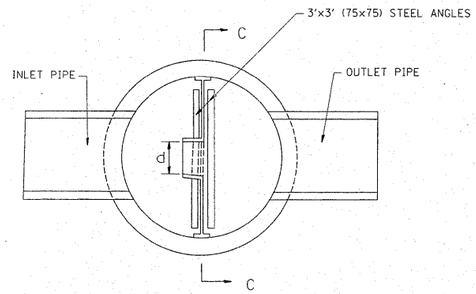

SECTION B-B

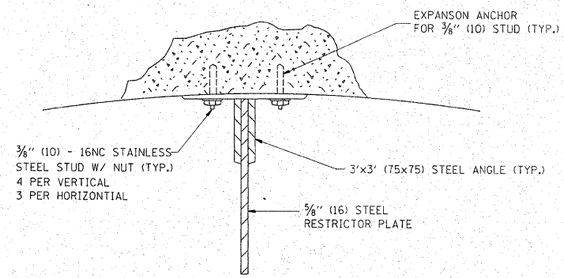

ANGLE FASTENER DETAIL

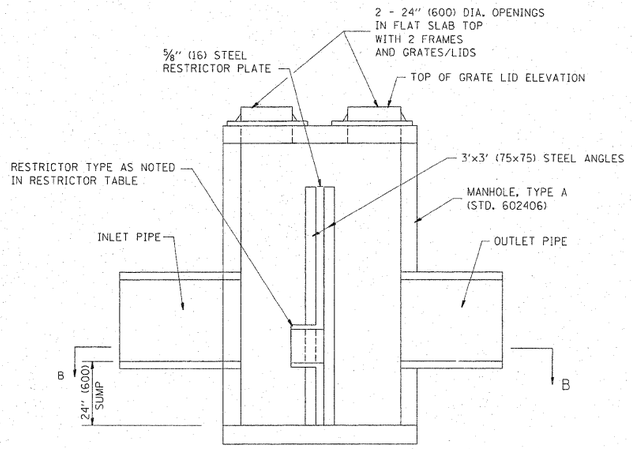

SECTION A-A

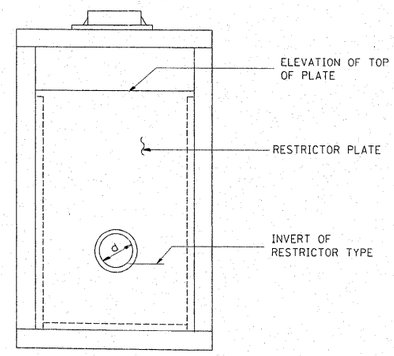

SECTION C-C

NOTES:

1. ALL STEEL ANGLES AND PLATES TO BE GALVANIZED AFTER FABRICATION.
2. ALL RESTRICTOR PLATES, ANGLES AND HARDWARE TO BE INCLUDED IN THE COST OF THE MANHOLE.
3. BASIS OF PAYMENT: "MANHOLES ,TYPE A, 6 FT. (1.8 m) DIAMETER, TYPE 1 FRAME, CLOSED LID, RESTRICTOR PLATE" EACH

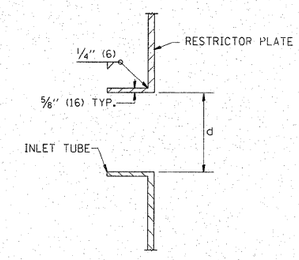

INLET TUBE DETAIL

STATION	MANHOLE DIAMETER	FRAME AND GRATE	RESTRICTOR TYPE	INSIDE RESTRICTOR TYPE DIAMETER in. (mm) (d)	INVERT OF RESTRICTOR TYPE	ELEVATION OF TOP OF PLATE OVERFLOW

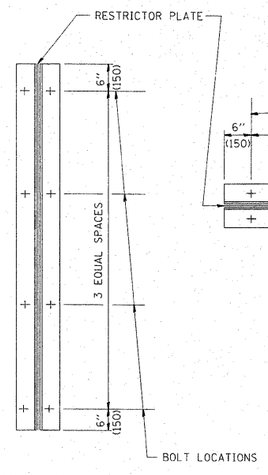

TYPICAL VERTICAL ANGLES
LOOKING TOWARD MANHOLE WALL

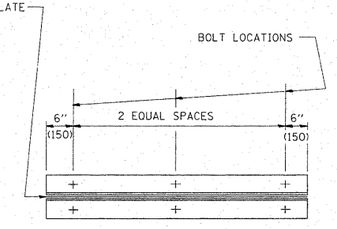

TYPICAL HORIZONTIAL
ANGLES LOOKING TOWARD
BOTTOM OF MANHOLE

TOTAL BOLTS REQUIRED: 22

NOTE:

1. ANGLES SHOULD BE 3x3x3/8 (75x75x75)
2. VERTICAL ANGLES SHOULD EXTEND FROM THE BOTTOM OF THE RESTRICTOR PLATE TO THE TOP.
3. HORIZONTIAL ANGLES SHOULD EXTEND FROM VERTICAL ANGLE TO VERTICAL ANGLE.

STEEL ANGLE BOLTING DETAILS

RESTRICTOR TYPE					
1	2	3	4	5	6
RE-ENTRANT TUBE	SHARP EDGED	SQUARE EDGED	RE-ENTRANT TUBE	SQUARE EDGED	ROUNDED
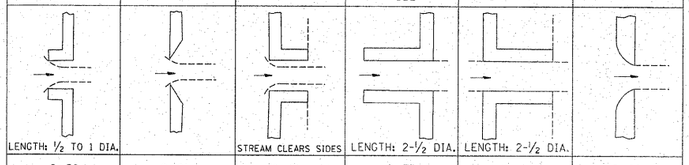					
LENGTH: 1/2 TO 1 DIA.		STREAM CLEARS SIDES	LENGTH: 2-1/2 DIA.	LENGTH: 2-1/2 DIA.	
C=.52	C=.61	C=.61	C=.73	C=.82	C=.98

VALUES OF "C" FOR CIRCULAR
AND SQUARE ORIFICES

ALL DIMENSIONS ARE IN INCHES (MILLIMETERS) UNLESS OTHERWISE SHOWN.

FILE NAME = c:\pw_work\pwidot\steedpa\d0159915\D1ST9d.dgn	USER NAME = steedpa	DESIGNED - R. SHAH	REVISED - R. SHAH 10-25-94
		DRAWN -	REVISED - E. GOMEZ 08-28-00
	PLOT SCALE = 50.7684 ' / IN.	CHECKED -	REVISED - M. GOMEZ 01-08-01
	PLOT DATE = 2/3/2011	DATE - 09-09-94	REVISED -

STATE OF ILLINOIS
DEPARTMENT OF TRANSPORTATION

MANHOLE WITH RESTRICTOR PLATE

SCALE: NONE | SHEET NO. 1 OF 1 SHEETS | STA. | TO STA.

F.A.U. RTE.	SECTION	COUNTY	TOTAL SHEETS	SHEET NO.
1566	29 R-N-1	COOK	120	76
BD600-04	(BD-12)	CONTRACT NO. 62377		
FED. ROAD DIST. NO. 1	ILLINOIS	FED. AID PROJECT		

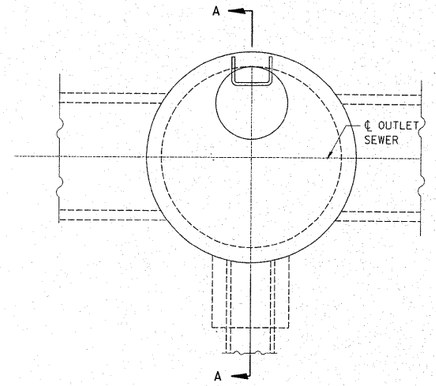

PLAN
FOR LOCATION SEE DRAINAGE PLANS

ENCASEMENT DETAILS				
DROP M.H. LOCATION STA., OFFSET				
INV. "A"				
INLET PIPE				
INV. "B"				
INV. "C"				
A				
B				
"V" BAR LENGTH				
NO. OF "U" BARS				
REINF. BARS				
CLASS "SI" CONC. CUBIC METER (CU. YD.)				

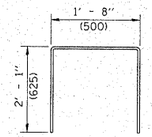

U-BARS

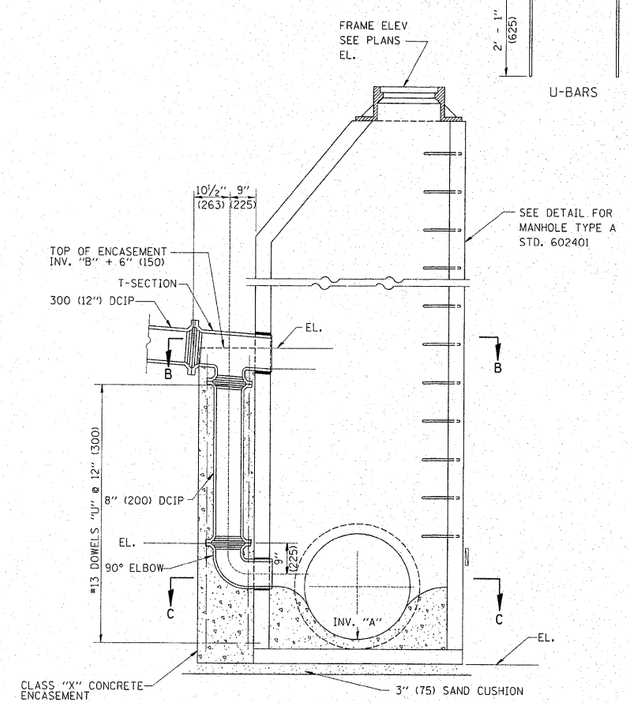

SECTION A-A

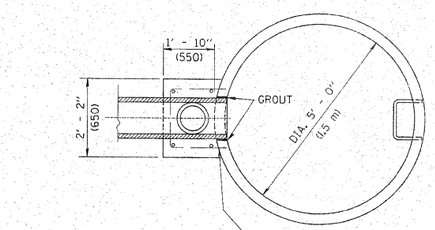

SECTION B-B

DRILL 1¼" (30) HOLE IN MANHOLE RISER WALLS, FILL WITH MORTAR AND INSERT DOWELS. (TYPICAL FOR ALL DOWELS)

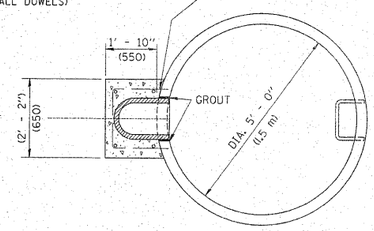

SECTION C-C

TYPE A1-1 MANHOLE WITH 1 DROP AND DEPTH UP TO 10' (3 m)
TYPE A1-2 " " 1 " " " FROM 10' TO 15' (3 m TO 1.5 m)
TYPE A1-3 " " 1 " " " FROM 15' TO 20' (1.5 m TO 6 m)
TYPE A1-4 " " 1 " " " OVER 20' (6 m)

TYPE A2-1 MANHOLE WITH 2 DROPS AND DEPTH UP TO 10' (3 m)
TYPE A2-2 " " 2 " " " FROM 10' TO 15' (3 m TO 1.5 m)
TYPE A2-3 " " 2 " " " FROM 15' TO 20' (1.5 m to 6 m)
TYPE A2-4 " " 2 " " " OVER 20' (6 m)

ALL DIMENSIONS ARE IN INCHES (MILLIMETERS) UNLESS OTHERWISE SHOWN

FILE NAME = c:\pw_work\pwidot\steedpa\d0159915\DistStd.dgn	USER NAME = steedpa	DESIGNED -	REVISED -
		DRAWN -	REVISED -
	PLOT SCALE = 50.7684 ' / IN.	CHECKED -	REVISED -
	PLOT DATE = 2/3/2011	DATE - 10-18-02	REVISED -

STATE OF ILLINOIS
DEPARTMENT OF TRANSPORTATION

DROP MANHOLE DETAILS

SCALE: NONE | SHEET NO. 1 OF 1 SHEETS | STA. TO STA.

F.A.U. RTE.	SECTION	COUNTY	TOTAL SHEETS	SHEET NO.
1566	29 R-N-1	COOK	120	77
BD600-05	**(BD-16)**	CONTRACT NO. 62377		
FED. ROAD DIST. NO. 1	ILLINOIS	FED. AID PROJECT		

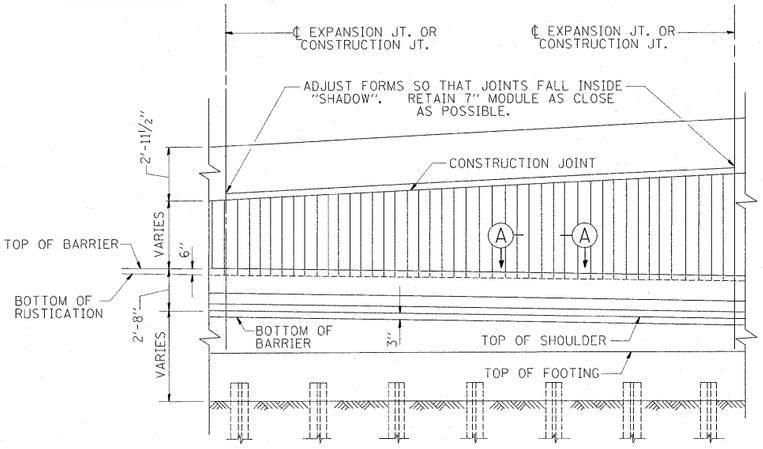

ELEVATION-TYPICAL ARCHITECTURAL FINISH

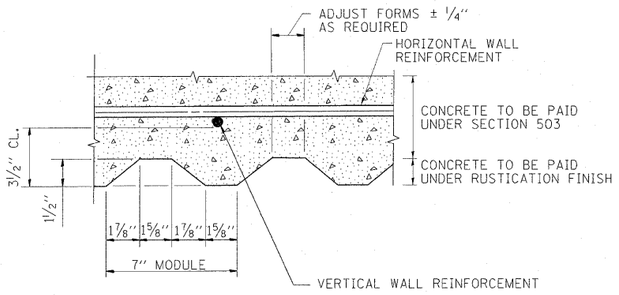

SECTION A-A

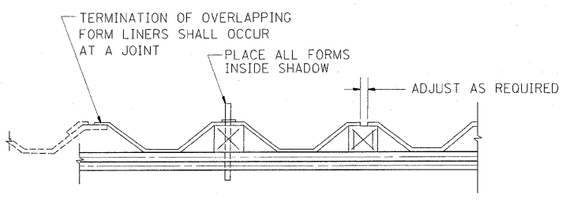

SUGGESTED FORMWORK DETAIL

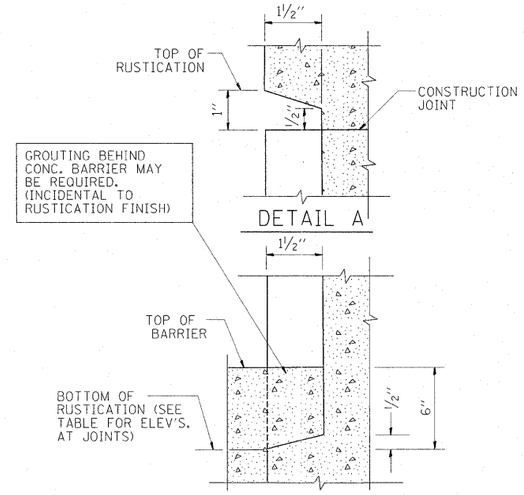

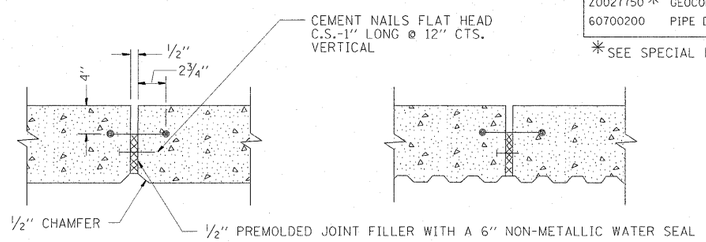

EXPANSION JOINT DETAIL

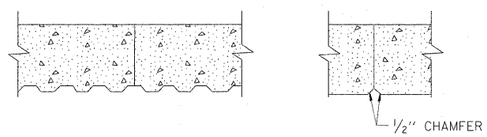

CONSTRUCTION JOINT DETAIL

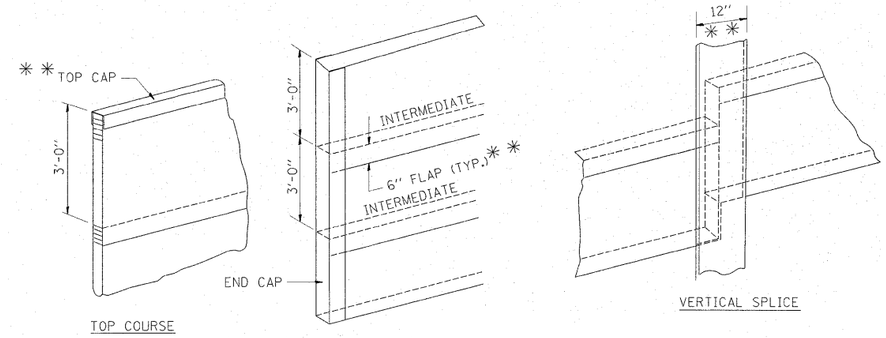

GEOCOMPOSITE WALL DRAIN DETAILS

** SEE RECURRING SPECIAL PROVISION #43 FOR GEOCOMPOSITE WALL DRAIN

PREFERRED PAY ITEMS

50400850 *	CLASS X CONCRETE (RETAINING WALL)	(C.Y.)
50400510 *	RUSTICATION FINISH	(S.F.)
60709582 *	PIPE UNDERDRAINS FOR STRUCTURES 6"	(L.F.)
Z0027750 *	GEOCOMPOSITE WALL DRAIN	(S.Y.)
60700200	PIPE DRAINS 6"	(L.F.)

* SEE SPECIAL PROVISIONS

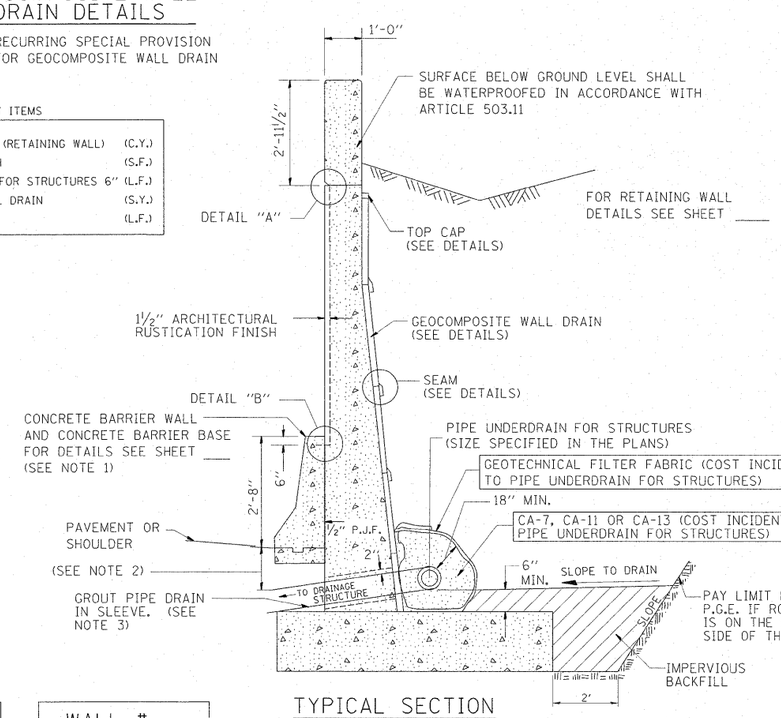

TYPICAL SECTION THRU RETAINING WALL

SLOPE: 1 TO 1 WITHOUT SHEETING
VERTICAL WITH SHEETING

WALL #	
STATION	ELEVATION

WALL #	
STATION	ELEVATION

WALL #	
STATION	ELEVATION

WALL #	
STATION	ELEVATION

WALL #	
STATION	ELEVATION

WALL #	
STATION	ELEVATION

WALL #	
STATION	ELEVATION

WALL #	
STATION	ELEVATION

NOTE 1.

CONCRETE BARRIER CONSTRUCTION:

WHEN THE CONCRETE BARRIER WALL IS TO BE CONSTRUCTED MONOLITHIC WITH THE RETAINING WALL THE DETAILS SHOWN IN THE RETAINING WALL SECTION SHALL GOVERN.

NOTE 2.

PIPE DRAIN SLOPE:

PRIOR TO THE PLACEMENT OF THE PIPE UNDERDRAIN SLEEVE THE ENGINEER SHALL DETERMINE THE SLOPE REQUIRED FOR THE PIPE UNDERDRAIN TO ENTER BELOW THE DRAINAGE STRUCTURE LID AT OR BELOW THE MINIMUM DISTANCE SHOWN ON THE DETAILS FOR THE STRUCTURE.

NOTE 3.

PIPE DRAIN

THE PIPE DRAIN SHALL TERMINATE AT A DRAINAGE STRUCTURE.

THE COST OF THE SLEEVE AND GROUT SHALL BE INCIDENTAL TO PIPE DRAINS.

FILE NAME = c:\pw_work\pwidot\steedpa\d0159915\DistStd.dgn	USER NAME = steedpa	DESIGNED - FORD	REVISED - DE YONG 07-11-90
		DRAWN - CADD	REVISED - DE YONG 08-18-90
	PLOT SCALE = 50.0000 ' / in.	CHECKED -	REVISED - DE YONG 07-09-91
	PLOT DATE = 12/7/2011	DATE - 11-30-88	REVISED - R. WEIDEMAN 02-20-04

STATE OF ILLINOIS
DEPARTMENT OF TRANSPORTATION

RUSTIFICATION FINISH AND GEOCOMPOSITE DRAIN FOR RETAINING WALLS

SCALE: NONE | SHEET NO. 1 OF 1 SHEETS | STA. | TO STA.

F.A.U. RTE.	SECTION	COUNTY	TOTAL SHEETS	SHEET NO.
1566	29 R-N-1	COOK	120	78

BD500-02 (BD-28) CONTRACT NO. 62377

FED. ROAD DIST. NO. 1 | ILLINOIS | FED. AID PROJECT

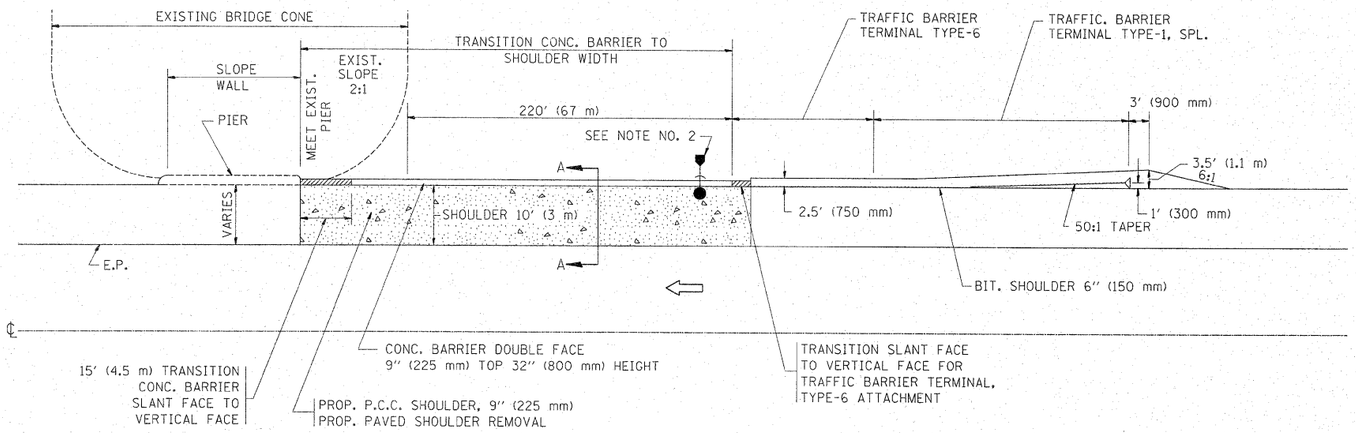

CONC. BARRIER ADJACENT TO SLOPE WALL WITH PIER (DITCH SECTION)

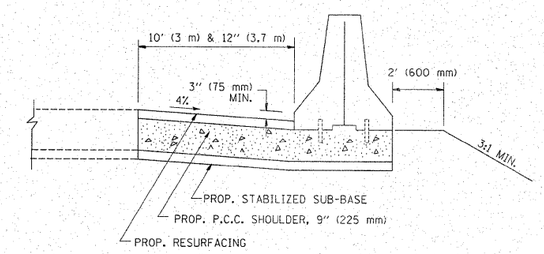

SECTION A-A

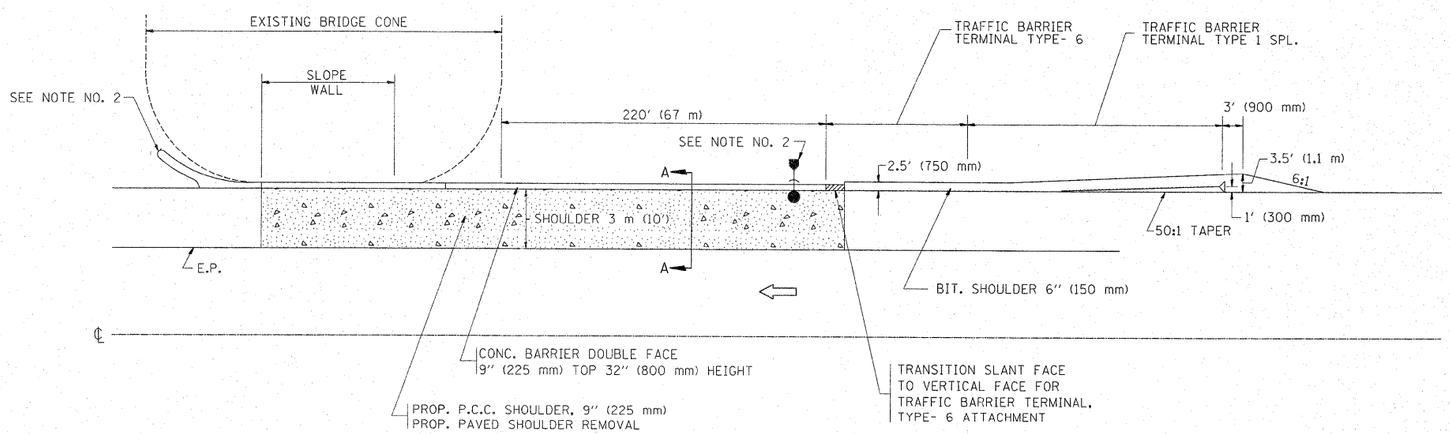

CONC. BARRIER ADJACENT TO SLOPE WALL WITHOUT PIER (DITCH SECTION)

NOTE:

1. SEE STATE STANDARD 630201 FOR STABILIZATION FOR GUARDRAIL.
*2. THE GUTTER OUTLET AND CATCH BASIN LOCATION IS DEPENDENT ON DIRECTION OF FLOW.
3. USE CONC. BARRIER SINGLE FACE IF CLEARANCE BETWEEN PIER AND SHOULDER IS LESS THAN 27" (685 mm).
4. SEE STATE STANDARD 637001 FOR CONCRETE BARRIER.

* CATCH BASIN TYPE C, TYPE 24 FRAME AND GRATE
STORM SEWERS, 12" (300 mm)
END SECTIONS, 12" (300 mm)

FILE NAME = c:\pw_work\pwidot\steedpa\d0159915\DistStd.dgn	USER NAME = steedpa	DESIGNED -	REVISED -
		DRAWN -	REVISED -
	PLOT SCALE = 50.7684 ' / IN.	CHECKED -	REVISED -
	PLOT DATE = 2/3/2011	DATE - 10-18-02	REVISED -

STATE OF ILLINOIS
DEPARTMENT OF TRANSPORTATION

CONCRETE BARRIER PIER AND SLOPE WALL PROTECTION DETAIL

SCALE: NONE | SHEET NO. 1 OF 1 SHEETS | STA. | TO STA.

F.A.U. RTE.	SECTION	COUNTY	TOTAL SHEETS	SHEET NO.
1566	29 R-N-1	COOK	120	79
	BD600-08 (BD29)	CONTRACT NO. 62377		
FED. ROAD DIST. NO. 1	ILLINOIS	FED. AID PROJECT		

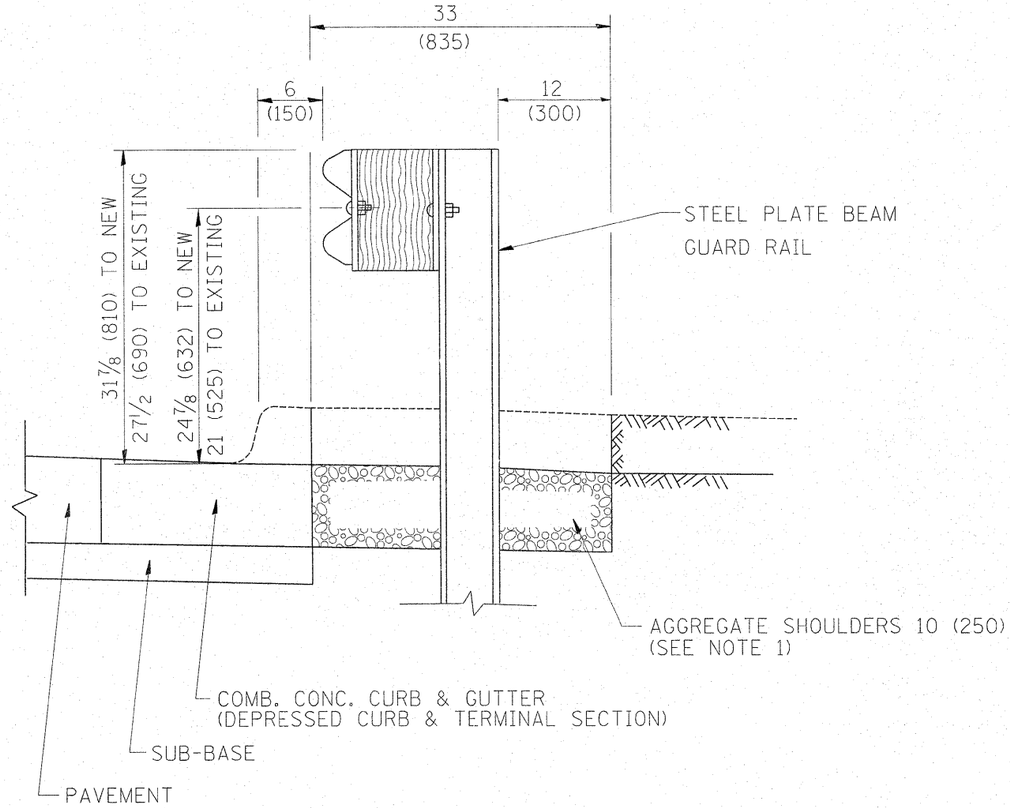

SECTION A-A

NOTES:

1. THE AGGREGATE SHOULDER, 10" OR HMA SHOULDER, 6" (IF REQUIRED) SHALL EXTEND UNDER THE TRAFFIC BARRIER TERMINAL.
2. "EXISTING" GUARDRAIL REFERS TO CONNECTING TERMINAL SECTION TO GUARD RAILING PRIOR TO THE MIDWEST GUARDRAIL SYSTEM.
3. THE CONTRACTOR SHALL VERIFY THE TYPE/HEIGHT OF GUARDRAIL IN-PLACE BEFORE ORDERING THE NEW TERMINAL SECTION. COST INCLUDED WITH THE COST OF THE TERMINAL. THE TERMINAL SECTION HEIGHT TO BE PLACED MUST MATCH THE HEIGHT OF THE IN-PLACE GUARDRAIL.

DETAILS FOR STEEL PLATE BEAM GUARD RAIL ADJACENT TO CURB AND GUTTER

[FOR ROADWAY SPEED 35 MPH (60 kmh) TO 45 MPH (70 kmh)]

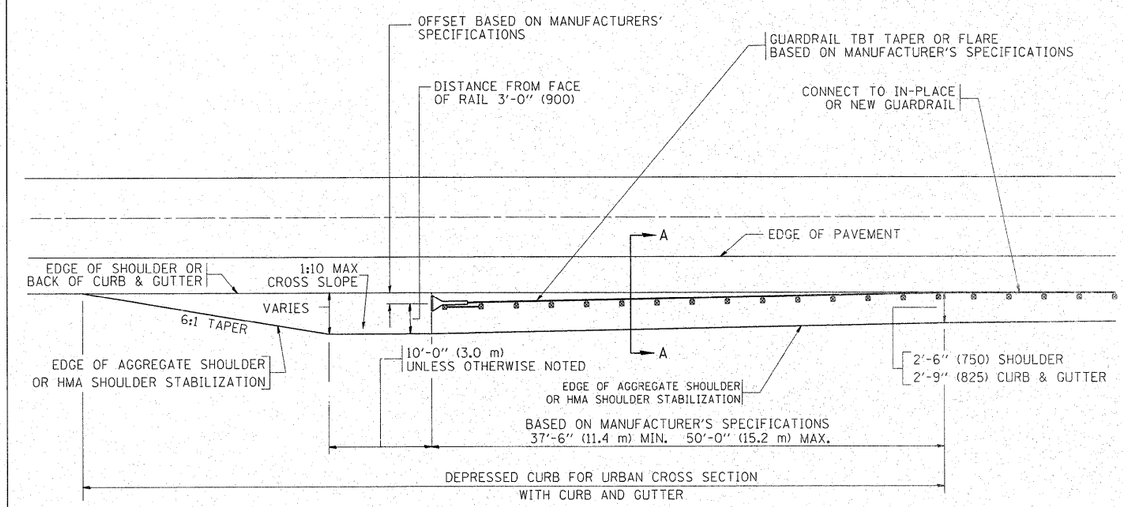

DEPRESSED CURB AND GUTTER AND SHOULDER TREATMENT AT TBT TY. 1 SPL.

BASIS OF PAYMENT: HMA SHOULDERS 6 (150) (IF REQUIRED) WILL BE PAID FOR AT THE CONTRACT UNIT PRICE PER SQUARE YARD (SQUARE METER) FOR "HOT-MIX ASPHALT SHOULDERS 6" (150 mm)".

STEEL PLATE BEAM GUARD RAIL AND TRAFFIC BARRIER TERMINAL, OF THE TYPE SPECIFIED WILL BE PAID FOR SEPARATELY.

TBT = TRAFFIC BARRIER TERMINAL

ALL DIMENSIONS ARE IN INCHES (MILLIMETERS) UNLESS OTHERWISE SHOWN.

FILE NAME = c:\pw_work\pwidot\steedpa\d0159915\DistStd.dgn	USER NAME = steedpa	DESIGNED - M. DE YONG	REVISED - E. GOMEZ 08-28-00	STATE OF ILLINOIS DEPARTMENT OF TRANSPORTATION	DETAILS FOR DEPRESSED CURB & GUTTER AND SHOULDER TREATMENT AT TBT TY 1 SPL.
	PLOT SCALE = 50.7684 ' / IN.	DRAWN -	REVISED - R. BORO 01-01-07		
	PLOT DATE = 2/3/2011	CHECKED -	REVISED - R. BORO 12-08-2008		SCALE: NONE / SHEET NO. 1 OF 1 SHEETS / STA. TO STA.
		DATE - 09-22-90	REVISED - R. BORO 09-14-2009		

F.A.U. RTE.	SECTION	COUNTY	TOTAL SHEETS	SHEET NO.
1566	29 R-N-1	COOK	120	80
	BD600-10 (BD 34)	CONTRACT NO. 62377		
FED. ROAD DIST. NO. 1	ILLINOIS	FED. AID PROJECT		

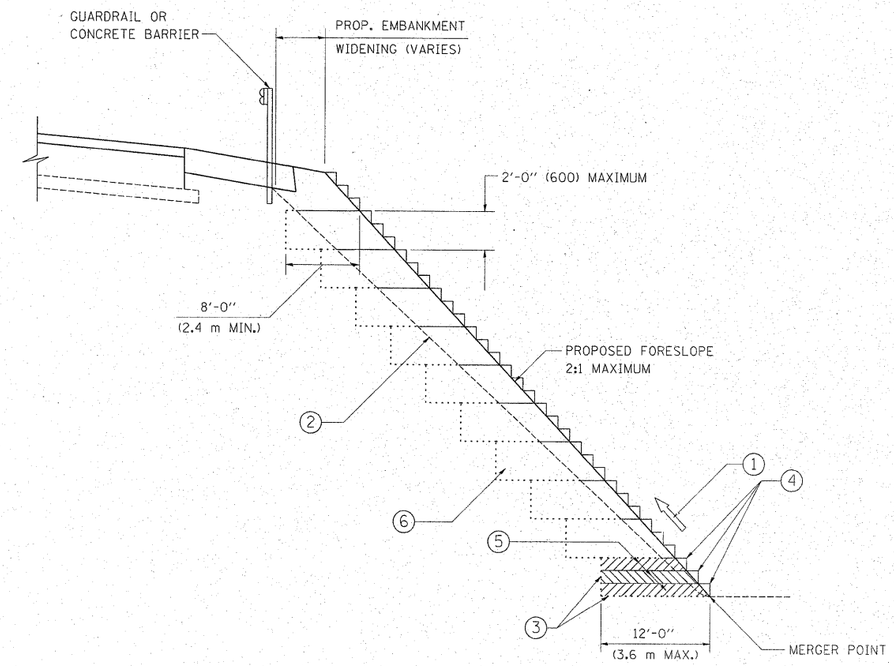

TYPICAL BENCHING DETAIL FOR EMBANKMENT

NOTES:

1. CONSTRUCT SUCCEEDING BENCH CUTS AND EMBANKMENT PLACEMENT AND COMPACTION FROM BOTTOM TO TOP IN STAIRSTEP FASHION.
2. EXISTING FORESLOPE PREPARED IN ACCORDANCE WITH ARTICLE 205.03 OF THE STANDARD SPECIFICATIONS.
3. BENCH CUT EXISTING SLOPE TYPICAL FOR EACH STEP.
4. TRIM TO FINAL SLOPE.
5. EQUAL 8-INCH (200) LIFTS OF EMBANKMENT COMPACTED IN ACCORDANCE WITH ARTICLE 205.05 OF THE STANDARD SPECIFICATIONS.
6. EXCAVATION OF BENCH CUTS WITHIN EXISTING EMBANKMENT WILL BE PAID FOR AT THE CONTRACT UNIT PRICE PER CUBIC METER OR CUBIC YARD FOR "EARTH EXCAVATION". THIS PRICE WILL INCLUDE ALL LABOR AND MATERIAL, NO ADDITIONAL COMPENSATION WILL BE ALLOWED.
7. SLOPES SHALL BE BENCHED ACCORDING TO THIS DETAIL WHEN THE SLOPE IS STEEPER THAN 4:1 AND THE HEIGHT IS GREATER THAN 5' (1.5 m).

ALL DIMENSIONS ARE IN INCHES (MILLIMETERS) UNLESS OTHERWISE SHOWN.

FILE NAME = c:\pw_work\pwidot\steedpa\d815995\DistStd.dgn	USER NAME = steedpa	DESIGNED -	REVISED -
		DRAWN - CADD	REVISED -
	PLOT SCALE = 50.7684 ' / IN.	CHECKED - S.E.B.	REVISED -
	PLOT DATE = 2/3/2011	DATE - 06-16-04	REVISED -

STATE OF ILLINOIS
DEPARTMENT OF TRANSPORTATION

BENCHING DETAIL
FOR EMBANKMENT WIDENING

SCALE: NONE | SHEET NO. 1 OF 1 SHEETS | STA. TO STA.

F.A.U. RTE.	SECTION	COUNTY	TOTAL SHEETS	SHEET NO.
1566	29 R-N-1	COOK	120	81
	BD-51	CONTRACT NO. 62377		
FED. ROAD DIST. NO. 1	ILLINOIS	FED. AID PROJECT		

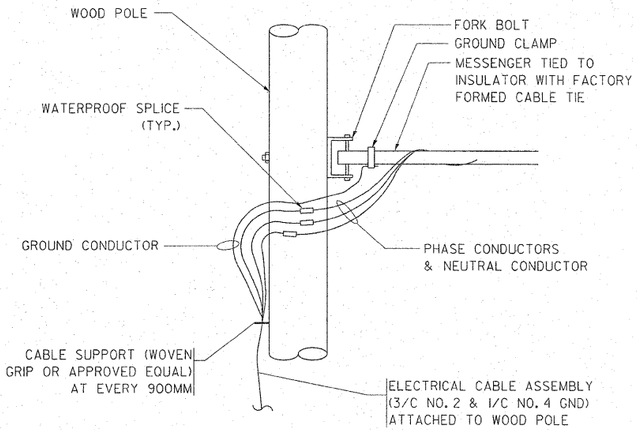

AERIAL CABLE CONNECTION DETAIL

N.T.S.

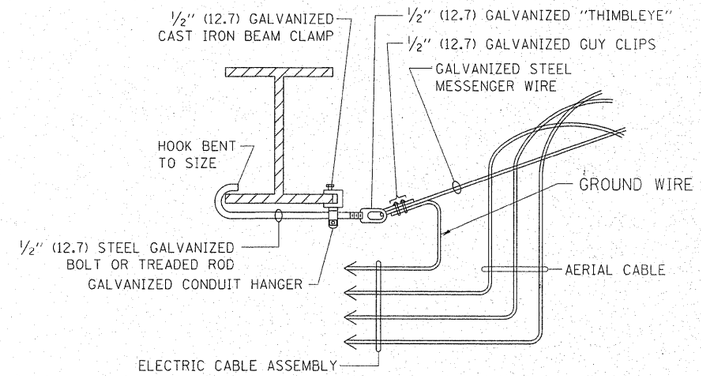

AERIAL CABLE ATTACHED TO STRUCTURE

NOT TO SCALE

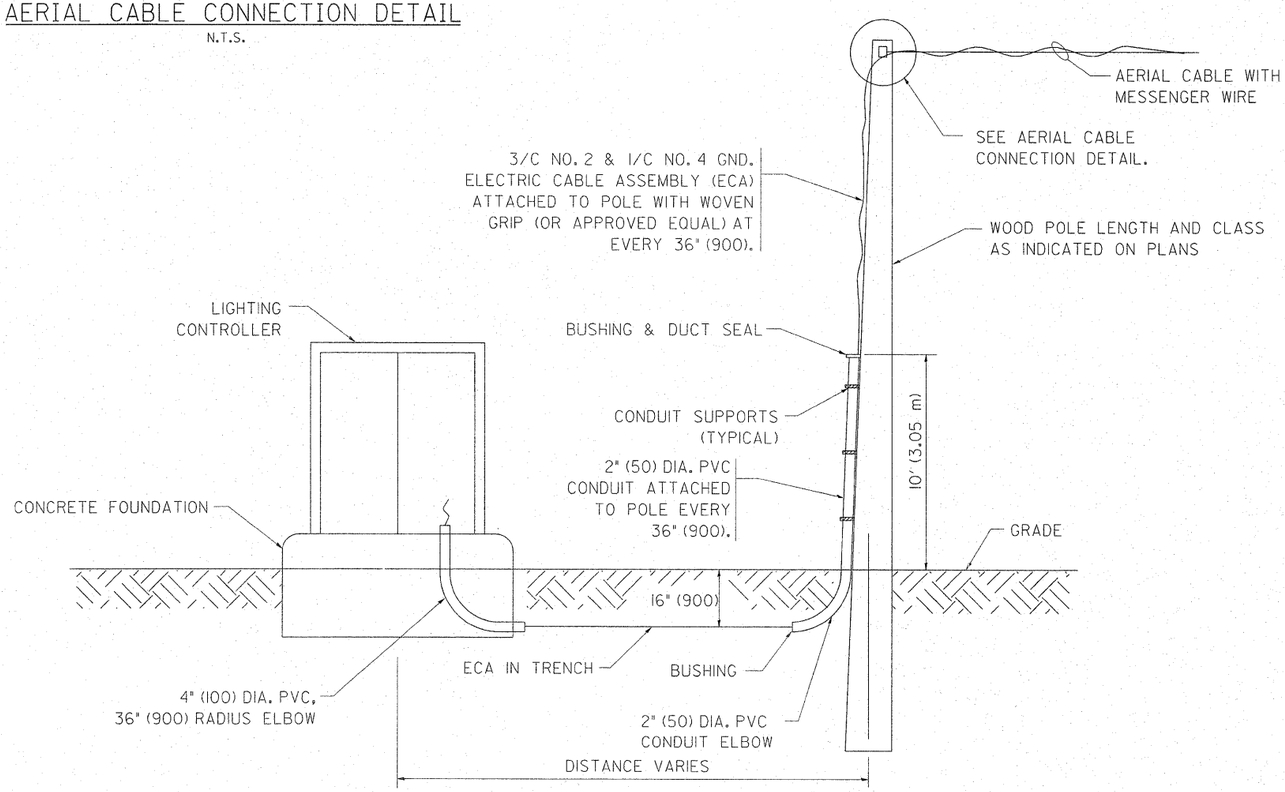

WOOD POLE TO LIGHTING CONTROLLER WIRING CONNECTION DETAIL

N.T.S.

NOTES:

1. ALL DIMENSIONS IN INCHES (MILLIMETERS) UNLESS OTHERWISE INDICATED.
2. SEE PROPOSED LIGHTING PLAN FOR CONDUIT, CABLE AND ROUTING.
3. THE CONTRACTOR SHALL PROVIDE INTERMEDIATE SUPPORTS TO MAINTAIN MINIMUM CLEARANCES. REFER TO AERIAL AERIAL CABLE ATTACHED TO STRUCTURE DETAIL.
4. COST OF SPLICES AND MOUNTING HARDWARE SHALL BE INCLUDED IN THE UNIT PRICE FOR AERIAL CABLE.

FILE NAME = c:\pw_work\pwidot\steedpa\d0159915\DistSld.dgn	USER NAME = steedpa	DESIGNED -	REVISED - 08-08-03	STATE OF ILLINOIS DEPARTMENT OF TRANSPORTATION	TEMPORARY AERIAL CABLE INSTALLATION			F.A.U. RTE.	SECTION	COUNTY	TOTAL SHEETS / SHEET NO.
		DRAWN -	REVISED -					1566	29 R-N-1	COOK	120 / 82
	PLOT SCALE = 50.7684 ' / IN.	CHECKED -	REVISED -					BE-801		CONTRACT NO. 62377	
	PLOT DATE = 2/3/2011	DATE -	REVISED -		SCALE: NONE	SHEET NO. 1 OF 1 SHEETS	STA. TO STA.	FED. ROAD DIST. NO. 1	ILLINOIS	FED. AID PROJECT	

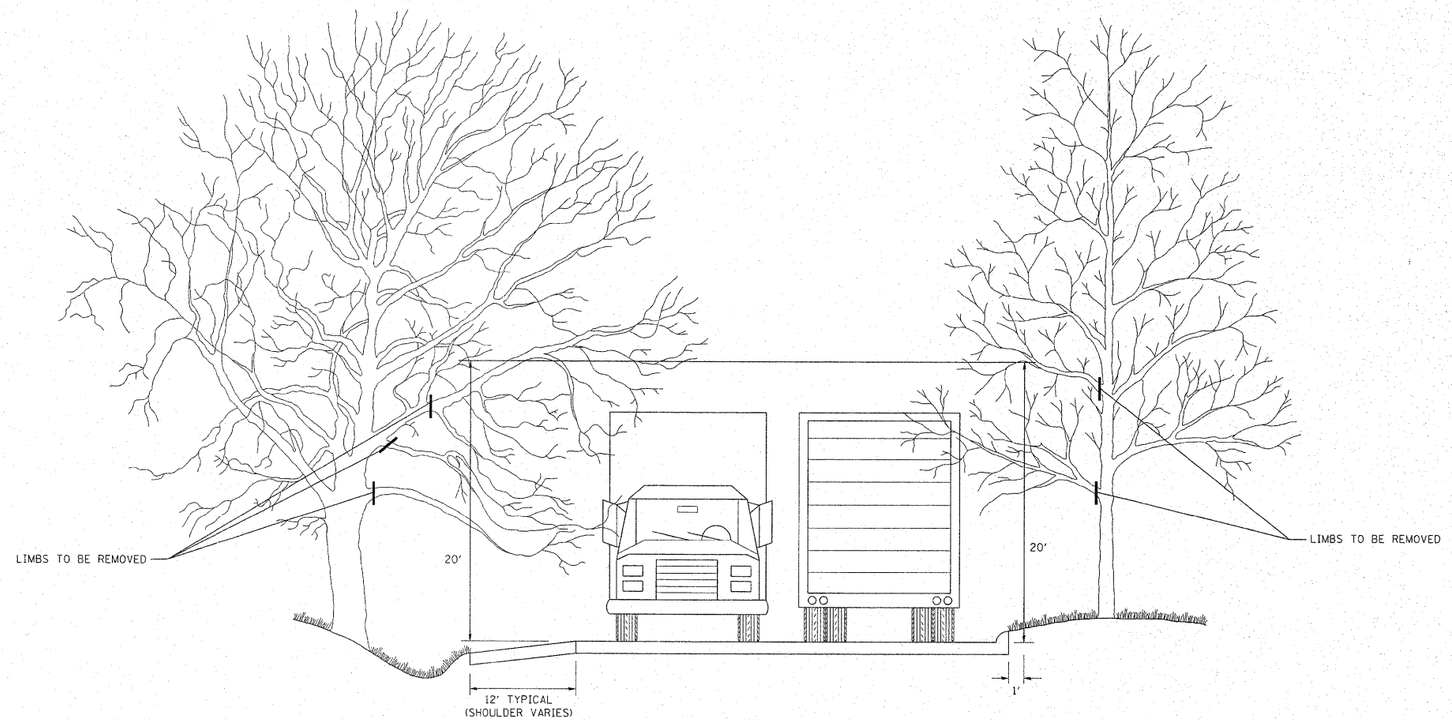

FILE NAME = c:\pw_work\pwidot\steedpa\d0159915\DistStd.dgn	USER NAME = steedpa	DESIGNED -	REVISED - R. BORO 10-31-06	STATE OF ILLINOIS DEPARTMENT OF TRANSPORTATION	PRUNING FOR SAFETY AND EQUIPMENT CLEARANCE	F.A.U. RTE.	SECTION	COUNTY	TOTAL SHEETS	SHEET NO.
		DRAWN -	REVISED -			1566	29 R-N-1	COOK	120	83
	PLOT SCALE = 50.7684 ' / IN.	CHECKED -	REVISED -			BM-20		CONTRACT NO. 62377		
	PLOT DATE = 2/3/2011	DATE -	REVISED -		SCALE: NONE / SHEET NO. 1 OF 1 SHEETS / STA. TO STA.	FED. ROAD DIST. NO. 1	ILLINOIS	FED. AID PROJECT		

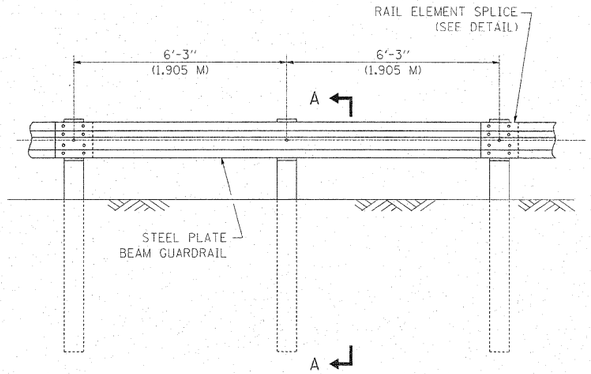

ELEVATION

TYPE A

6'-3" (1.905 M) TYPICAL POST SPACING

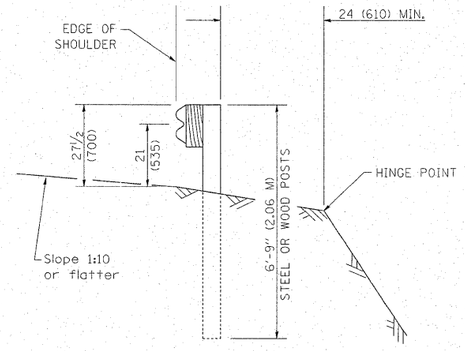

SECTION A-A

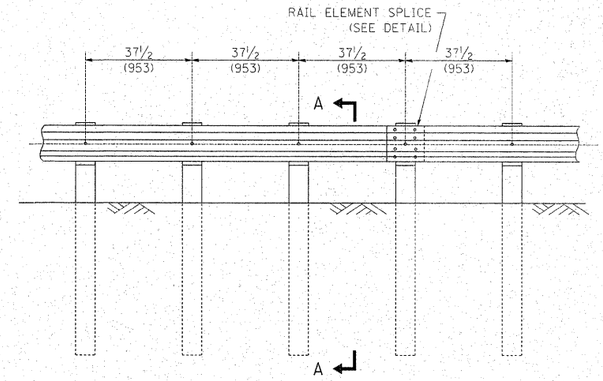

ELEVATION

TYPE A

37½ (953) CLOSED POST SPACING

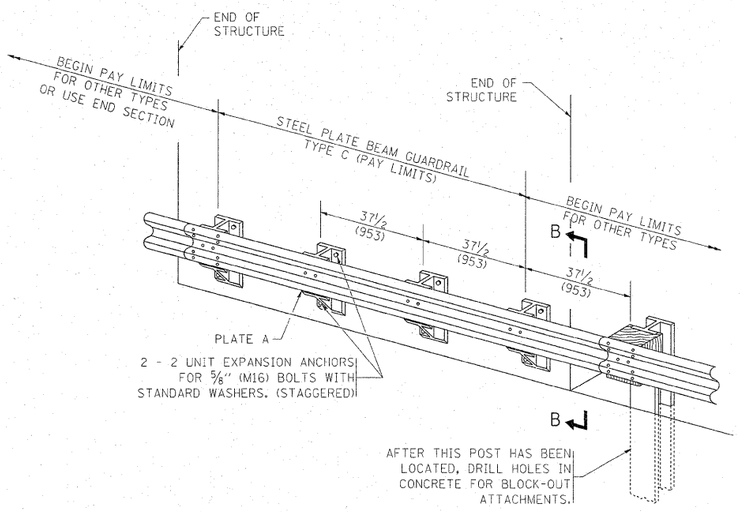

TYPE C

37½ (953) BLOCK-OUT SPACING

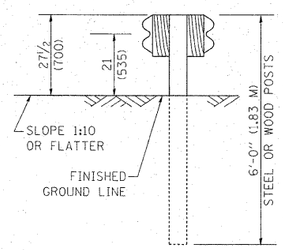

SECTION C-C

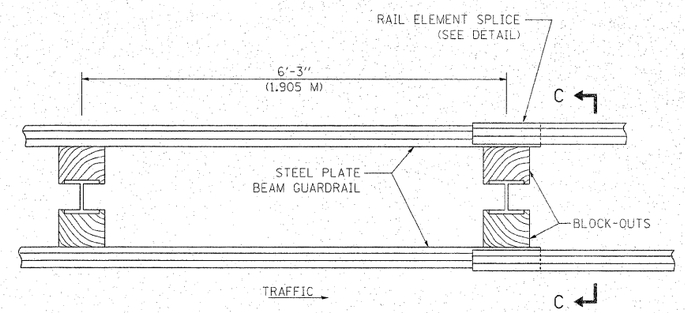

PLAN

TYPE D

DOUBLE STEEL PLATE BEAM GUARDRAIL
6'-3" (1.905 M) TYPICAL POST SPACING

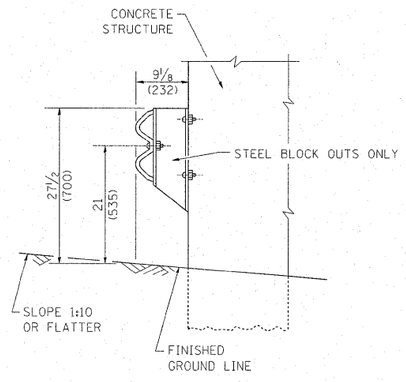

SECTION B-B

GENERAL NOTES

ALL SLOPE RATIOS ARE EXPRESSED AS UNITS OF VERTICAL DISPLACEMENT TO UNITS OF HORIZONTAL DISPLACEMENT (V:H).

ALL DIMENSIONS ARE IN INCHES (MILLIMETERS) UNLESS OTHERWISE SHOWN.

THE EXISTING STEEL POSTS MAY BE DRILLED TO MATCH THE BOLT PATTERN SHOWN HEREIN FOR THE WOOD BLOCK-OUT, OR A NEW STEEL POST SHALL BE PROVIDED.

THIS DETAIL IS APPLICABLE TO THE GUARDRAIL SYSTEM USED PRIOR TO JANUARY 1, 2007. FOR DETAILS ON THE MIDWEST GUARDRAIL SYSTEM, SEE STANDARD 630001.

FILE NAME = c:\pw_work\pwidot\steedpa\d0159915\DistStd.dgn	USER NAME = steedpa	DESIGNED -	REVISED - 10-31-06	STATE OF ILLINOIS DEPARTMENT OF TRANSPORTATION	REMOVE AND REERECT STEEL PLATE BEAM GUARDRAIL			F.A.U. RTE.	SECTION	COUNTY	TOTAL SHEETS / SHEET NO.
		DRAWN -	REVISED -					1566	29 R-N-1	COOK	120 / 84
	PLOT SCALE = 50.7684 ' / IN.	CHECKED -	REVISED -					BM-21		CONTRACT NO. 62377	
	PLOT DATE = 2/3/2011	DATE -	REVISED -		SCALE: NONE	SHEET NO. 1 OF 4 SHEETS	STA. TO STA.	FED. ROAD DIST. NO. 1	ILLINOIS	FED. AID PROJECT	

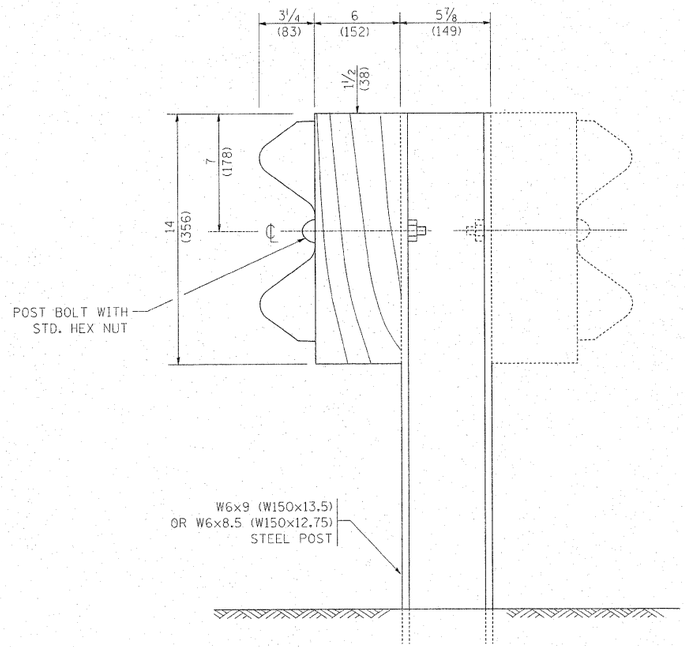

STEEL POST CONSTRUCTION

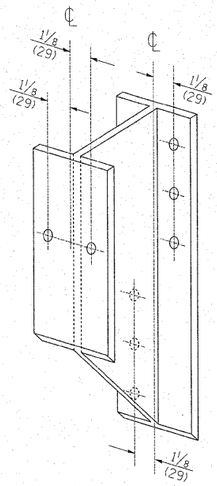

STEEL BLOCK-OUT DETAIL

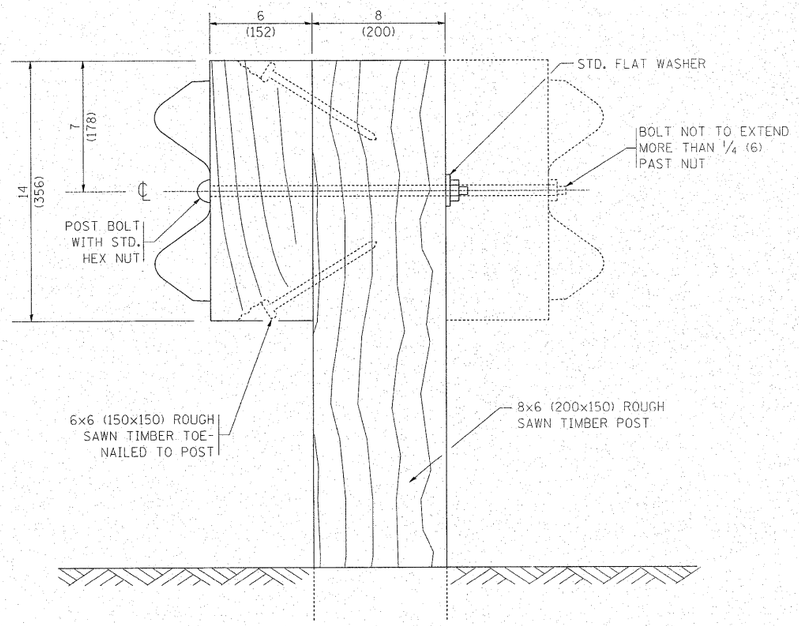

WOOD POST CONSTRUCTION

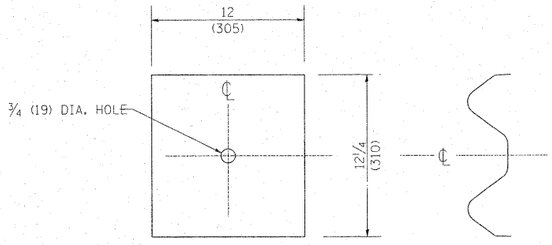

NOTE:

PLATE A SHALL BE PLACED BETWEEN RAIL ELEMENT AND BLOCK-OUT AT NON-SPLICE MOUNTING POINTS ONLY WHEN STEEL BLOCK-OUTS ARE USED.

PLATE A

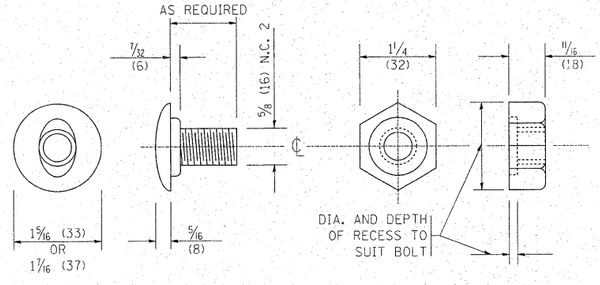

POST OR SPLICE BOLT & NUT

FILE NAME = c:\pw_work\pwidot\steedpa\d0159915\D:ist5cd.dgn	USER NAME = steedpa	DESIGNED -	REVISED - 10-31-06	STATE OF ILLINOIS DEPARTMENT OF TRANSPORTATION	REMOVE AND REERECT STEEL PLATE BEAM GUARDRAIL	F.A.U. RTE.	SECTION	COUNTY	TOTAL SHEETS	SHEET NO.
		DRAWN -	REVISED -			1566	29 R-N-1	COOK	120	85
	PLOT SCALE = 50.7684 ' / IN.	CHECKED -	REVISED -			BM-21		CONTRACT NO. 62377		
	PLOT DATE = 2/3/2011	DATE -	REVISED -		SCALE: NONE / SHEET NO. 2 OF 4 SHEETS / STA. TO STA.	FED. ROAD DIST. NO. 1	ILLINOIS	FED. AID PROJECT		

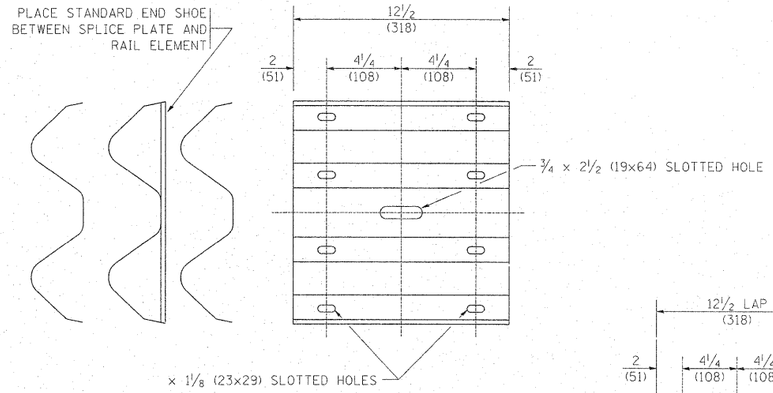

SPLICE PLATE

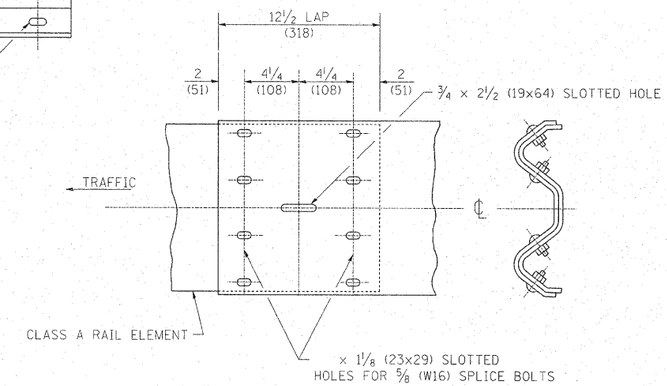

RAIL ELEMENT SPLICE

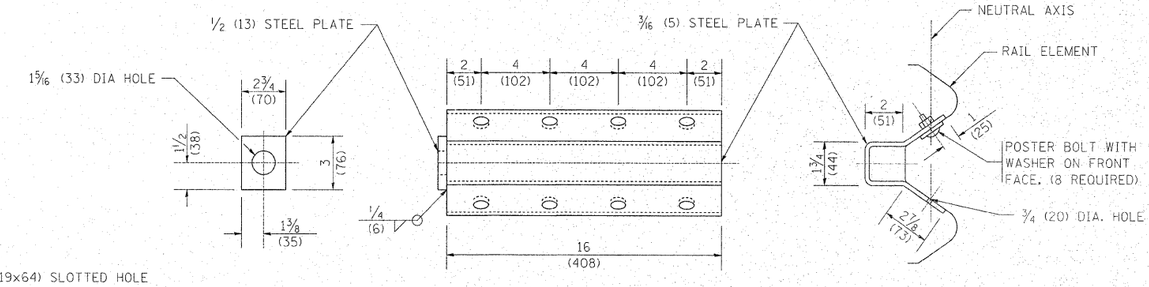

NOTE:

ANCHORE PLATE T SHALL BE USED TO ATTACH CABLE ASSEMBLY TO GUARDRAIL WHEN REQUIRED ON TRAFFIC BARRIER TERMINALS.

ANCHORE PLATE T DETAILS

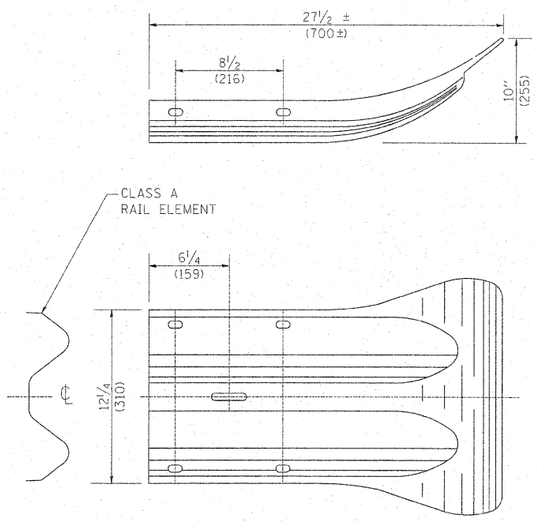

END SECTION

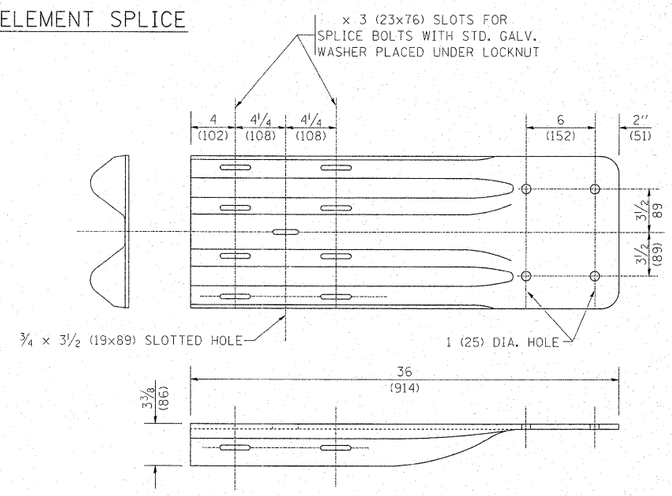

END SHOE

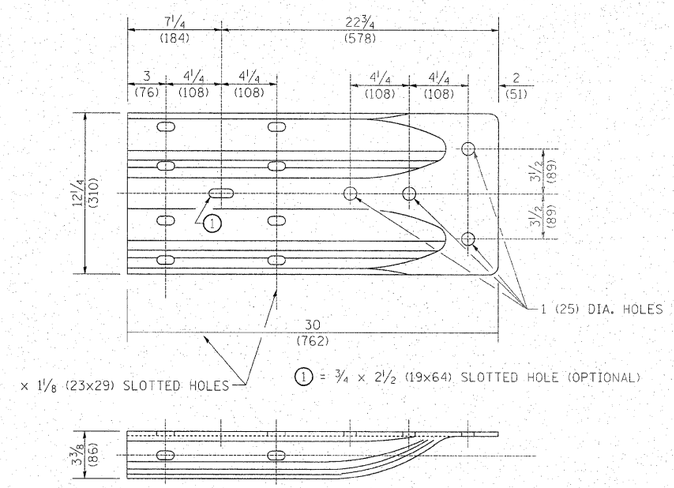

ALTERNATE END SHOE

NOTE:

WHEN END SHOE IS ATTACHED TO A BRIDGE PARAPET WHICH HAS AN EXPANSION JOINT, THE BOLTS SHALL BE PROVIDED WITH A LOCKNUT OR DOUBLE NUT AND SHALL BE TIGHTENED ONLY TO A POINT THAT WILL ALLOW GUARDRAIL MOVEMENT.

THE STANDARD END SHOE SHALL BE ATTACHED TO THE CONCRETE WITH PRE-DRILLED OR SELF-DRILLING ANCHOR BOLTS. THE ANCHOR CONE SHALL BE SET FLUSH WITH THE SURFACE OF THE CONCRETE.

EXTERNALLY THREADED STUDS PROTRUDING FROM THE SURFACE OF THE CONCRETE WILL NOT BE PERMITTED.

FILE NAME = c:\pw_work\pwidot\steedpa\d2159915\DistStd.dgn	USER NAME = steedpa	DESIGNED -	REVISED - 10-31-06	STATE OF ILLINOIS DEPARTMENT OF TRANSPORTATION
		DRAWN -	REVISED -	
	PLOT SCALE = 50.7684 ' / IN.	CHECKED -	REVISED -	
	PLOT DATE = 2/3/2011	DATE -	REVISED -	

REMOVE AND REERECT STEEL PLATE BEAM GUARDRAIL

SCALE: NONE | SHEET NO. 3 OF 4 SHEETS | STA. | TO STA.

F.A.U. RTE.	SECTION	COUNTY	TOTAL SHEETS	SHEET NO.
1566	29 R-N-1	COOK	120	86
	BM-21	CONTRACT NO. 62377		
FED. ROAD DIST. NO. 1	ILLINOIS	FED. AID PROJECT		

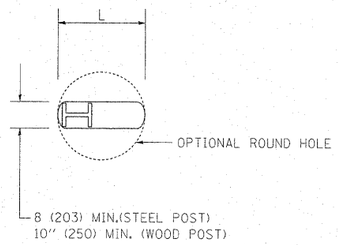

PLAN

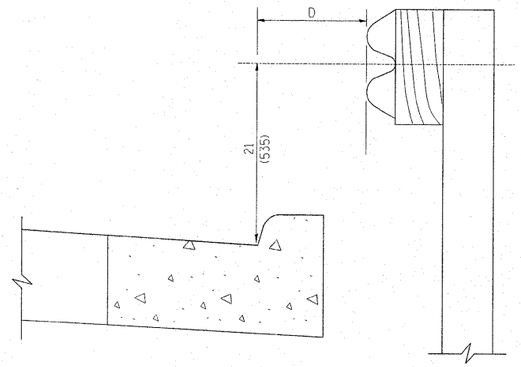

NOTE:

IF IT IS NECESSARY FOR D TO BE MORE THAN 12 (300) AND LESS THAN 10'-0" (3.0 M) TYPE M-2 (M-5) CURB AND GUTTER (STD. E06001) SHALL BE USED IN FRONT OF AND IN ADVANCE OF THE GUARDRAIL.

GUARDRAIL PLACED BEHIND CURB

(D = 0 DESIRABLE TO 12 (300) MAXIMUM)

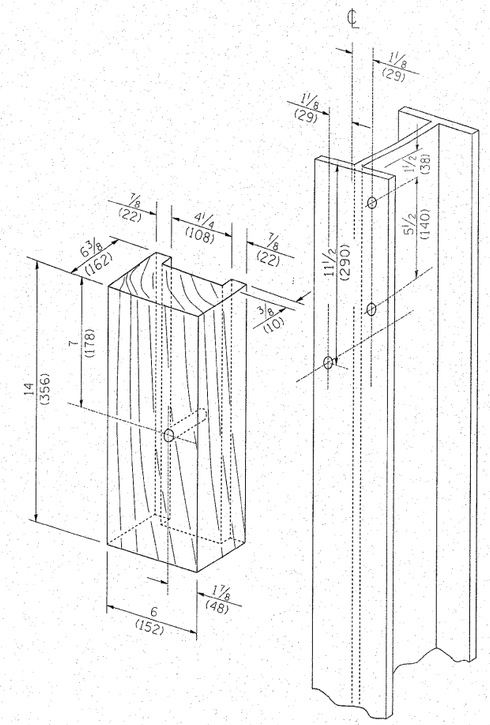

WOOD BLOCK-OUT AND STEEL POST DETAILS

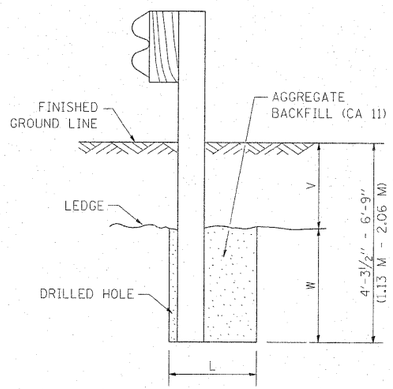

NOTE:

LEDGE LINE IS TOP OF ROCK LEDGE OR HARD SLAG FILL.

ELEVATION

FOOTING FOR POST WHEN IMPERVIOUS MATERIAL IS ENCOUNTERED

V	W	L	
		STEEL POST	WOOD POST
0 - 18 (0 - 460)	24 (610)	21 (530)	23 (580)
>18 - 41.5 (> 460 - 825)	12 (305)	8 (203)	10 (250)
>41.5 - 53.5 (> 825 - 1.13 M)	12 - 0 (350 - 0)	8 (203)	10 (250)

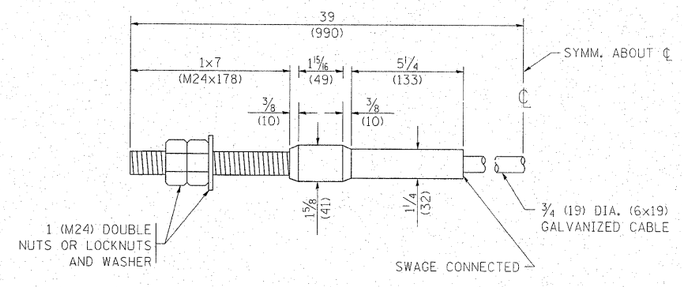

CABLE ASSEMBLY

(40,000 LBS (18,100 KG) MIN. BREAKING STRENGTH)
TIGHTEN TO TAUT TENSION

FILE NAME = c:\pw_work\pwidot\steedpa\d01599;5\DistSpc.dgn	USER NAME = steedpa	DESIGNED -	REVISED - 10-31-06	STATE OF ILLINOIS DEPARTMENT OF TRANSPORTATION	REMOVE AND REERECT STEEL PLATE BEAM GUARDRAIL	F.A.U. RTE.	SECTION	COUNTY	TOTAL SHEETS / SHEET NO.
		DRAWN -	REVISED -			1566	29 R-N-1	COOK	120 / 87
	PLOT SCALE = 50.7684 ' / IN.	CHECKED -	REVISED -				BM-21	CONTRACT NO. 62377	
	PLOT DATE = 2/3/2011	DATE -	REVISED -		SCALE: NONE / SHEET NO. 4 OF 4 SHEETS / STA. TO STA.	FED. ROAD DIST. NO. 1	ILLINOIS	FED. AID PROJECT	

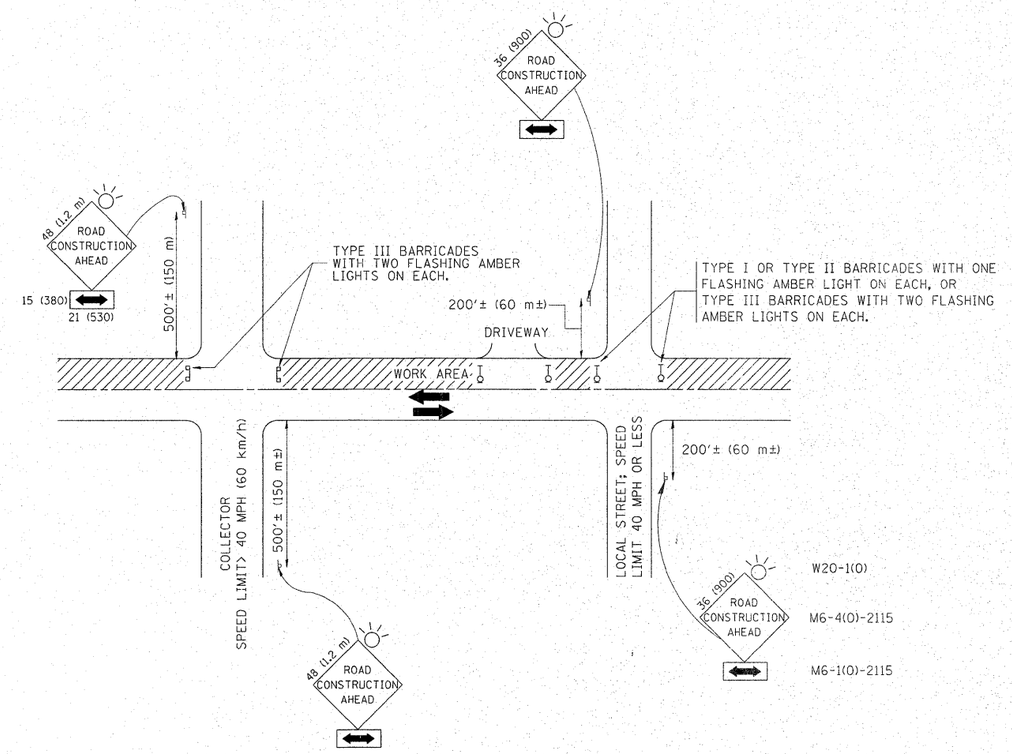

TRAFFIC CONTROL AND PROTECTION FOR SIDE ROADS, INTERSECTIONS, AND DRIVEWAYS

NOTES:

A. FOR NO LANE RESTRICTION ON THE SIDE ROAD OR DRIVEWAYS

1. SIDE ROAD WITH A SPEED LIMIT OF 40 MPH (60 km/h) OR LESS AS SHOWN ON THE DRAWING AND AS DIRECTED BY THE ENGINEER:

   a) ONE **ROAD CONSTRUCTION AHEAD** SIGN 36 x 36 (900x900) WITH A FLASHER AND FLAG MOUNTED ON IT APPROXIMATELY 200' (60 m) IN ADVANCE OF THE MAIN ROUTE.

   b) THE CLOSED PORTION OF THE MAIN ROUTE SHALL BE PROTECTED BY BLOCKING WITH TYPE I, TYPE II OR TYPE III BARRICADES, 1/3 OF THE CROSS SECTION OF THE CLOSED PORTION.

2. SIDE ROAD WITH A SPEED LIMIT GREATER THAN 40 MPH (60 km/h) AS SHOWN ON THE DRAWING AND AS DIRECTED BY THE ENGINEER:

   a) ONE **ROAD CONSTRUCTION AHEAD** SIGN 48 x 48 (1.2 m x 1.2 m) WITH A FLASHER MOUNTED ON IT APPROXIMATELY 500' (150 m) IN ADVANCE OF THE MAIN ROUTE.

   b) THE CLOSED PORTION OF THE MAIN ROUTE SHALL BE PROTECTED BY BLOCKING WITH TYPE III BARRICADES, 1/2 OF THE CROSS SECTION OF THE CLOSED PORTION.

3. WHEN THE SIDE ROAD LIES BETWEEN THE BEGINNING OF THE MAINLINE SIGNING AND THE WORK ZONE, A SINGLE HEADED ARROW (M6-1) SHALL BE USED IN LIEU OF THE DOUBLE HEADED ARROW (M6-4).

B. FOR A LANE CLOSURE ON A SIDE ROAD OR DRIVEWAY:

USE APPLICABLE PORTIONS OF THE TYPICAL APPLICATION OF TRAFFIC CONTROL DEVICES (STD. 701501, STD. 701606 OR THE APPROPRIATE STANDARD). THE SPACING OF SIGNS AND BARRICADES SHALL BE ADJUSTED FOR FIELD CONDITIONS AS DIRECTED BY THE ENGINEER. THE DIRECTIONAL ARROW SHALL BE COVERED OR REMOVED WHEN NO LONGER CONSISTENT WITH THE SIDE ROAD LANE CLOSURE.

C. ADVANCE WARNING SIGNS ARE TO BE OMITTED ON DRIVEWAY UNLESS OTHERWISE NOTED.

D. THE TRAFFIC CONTROL AND PROTECTION FOR SIDE ROADS, INTERSECTIONS, AND DRIVEWAYS SHALL BE INCIDENTAL TO THE COST OF SPECIFIED TRAFFIC CONTROL STANDARDS OR ITEMS.

All dimensions are in millimeters (inches) unless otherwise shown.

FILE NAME = c:\pw_work\pwidot\steedpa\d815991S\DistStd.dgn	USER NAME = steedpa	DESIGNED - LHA	REVISED - J. OBERLE 10-18-95
		DRAWN -	REVISED - A. HOUSEH 03-06-96
	PLOT SCALE = 50.7684 ' / IN.	CHECKED -	REVISED - A. HOUSEH 10-15-96
	PLOT DATE = 2/3/2011	DATE - 06-89	REVISED -T. RAMMACHER 01-06-00

STATE OF ILLINOIS
DEPARTMENT OF TRANSPORTATION

TRAFFIC CONTROL AND PROTECTION FOR SIDE ROADS, INTERSECTIONS, AND DRIVEWAYS

SCALE: NONE | SHEET NO. 1 OF 1 SHEETS | STA. TO STA.

F.A.U. RTE.	SECTION	COUNTY	TOTAL SHEETS	SHEET NO.
1566	29 R-N-1	COOK	120	88
	TC-10	CONTRACT NO. 62377		

FED. ROAD DIST. NO. 1 | ILLINOIS | FED. AID PROJECT

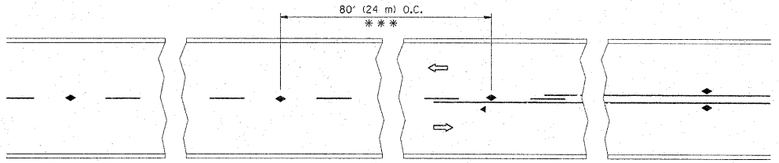

* * * REDUCE TO 40' (12 m) O.C. ON CURVES WITH POSTED OR ADVISORY SPEED 45 M.P.H. (70 km/h) OR LESS.

TWO-LANE/TWO-WAY

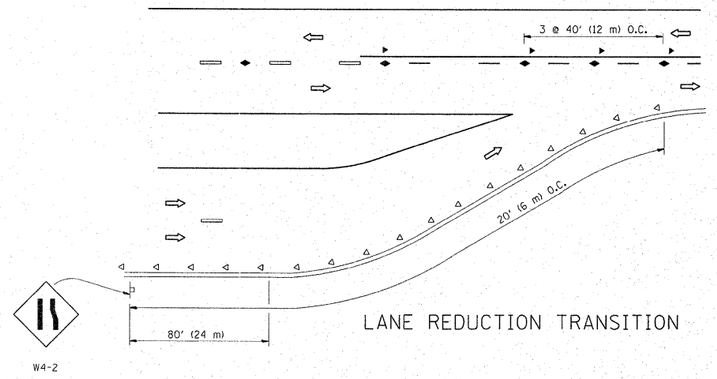

LANE REDUCTION TRANSITION

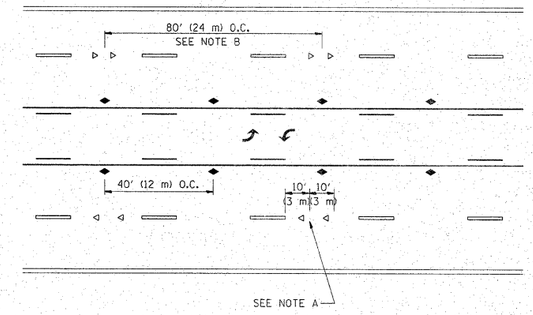

TWO-WAY LEFT TURN

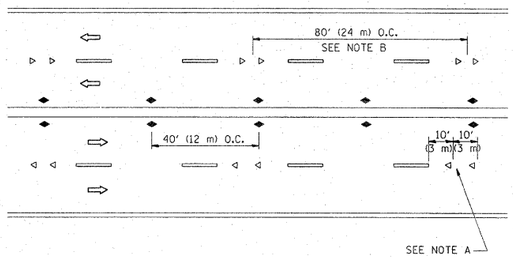

MULTI-LANE/UNDIVIDED

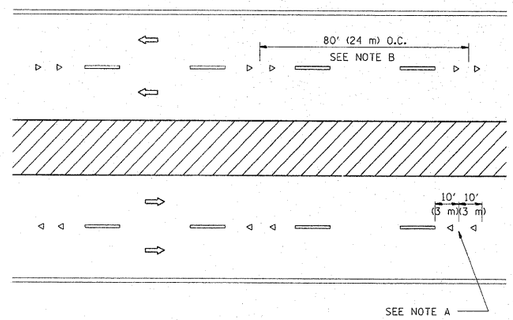

MULTI-LANE/DIVIDED

GENERAL NOTES

1. MARKERS USED WITH DASHED LINES SHALL BE CENTERED IN THE GAP BETWEEN SEGMENTS.
2. MARKERS USED ADJACENT TO SOLID LINES SHALL BE OFFSET 2 TO 3 (50 TO 75) TOWARD TRAFFIC AS SHOWN.
3. MARKERS THROUGH TANGENTS LESS THAN 500' (150 m) IN LENGTH BETWEEN CURVES SHALL BE INSTALLED AT THE LESSER OF THE TWO CURVE SPACINGS.

SYMBOLS

- YELLOW STRIPE
- WHITE STRIPE
- ONE-WAY AMBER MARKER
- ONE-WAY CRYSTAL MARKER (W/O)
- TWO-WAY AMBER MARKER

LANE MARKER NOTES

A. USE DOUBLE LANE LINE MARKERS SPACED AS SHOWN.

B. REDUCE TO 40' (12 m) O.C. ON CURVES WHERE ADVISORY SPEEDS ARE 10 M.P.H (20 km/h) LOWER THAN POSTED SPEEDS.

DESIGN NOTES

1. DOUBLE LANE LINE MARKERS SHALL BE USED UNLESS SPECIFIED OTHERWISE.
2. EXCEPT AS SHOWN ON THE LANE REDUCTION TRANSITION AND FREEWAY EXIT RAMP DETAIL, MARKERS ARE NOT TO BE SPECIFIED ON RIGHT EDGE LINES.
3. THE EXACT MARKER LIMITS, SPACING, AND COLOR SHOULD BE INCLUDED IN THE PLANS.
4. MARKERS SHOULD NOT BE USED ALONGSIDE CURBS EXCEPT FOR EXTREMELY SHORT SECTIONS OF CURBS WHERE NOT MORE THAN TWO MARKERS WOULD BE INVOLVED.

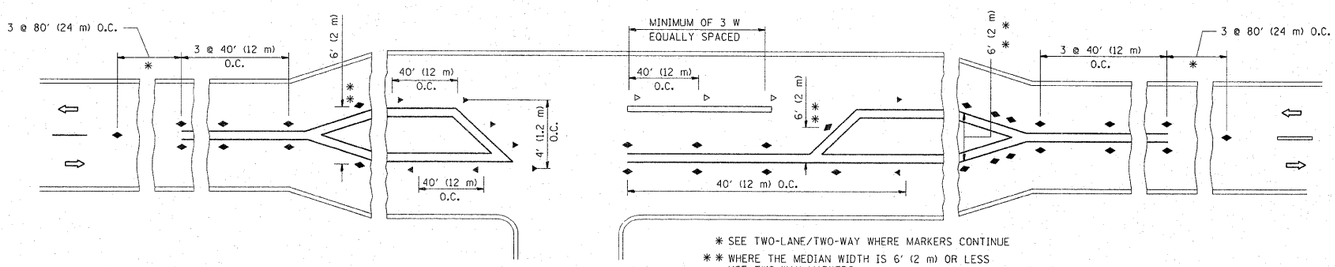

* SEE TWO-LANE/TWO-WAY WHERE MARKERS CONTINUE

* * WHERE THE MEDIAN WIDTH IS 6' (2 m) OR LESS USE TWO-WAY MARKERS.

LEFT TURN

All dimensions are in inches (millimeters) unless otherwise shown.

FILE NAME = c:\pw_work\pwidot\steedpa\d0159915\DistStd.dgn	USER NAME = steedpa	DESIGNED -	REVISED - T. RAMMACHER 09-19-94	STATE OF ILLINOIS DEPARTMENT OF TRANSPORTATION
		DRAWN -	REVISED - T. RAMMACHER 03-12-99	
	PLOT SCALE = 50.7684 ' / IN.	CHECKED -	REVISED - T. RAMMACHER 01-06-00	
	PLOT DATE = 2/3/2011	DATE -	REVISED - C. JUCIUS 09-09-09	

TYPICAL APPLICATIONS
RAISED REFLECTIVE PAVEMENT MARKERS (SNOW-PLOW RESISTANT)

SCALE: NONE | SHEET NO. 1 OF 1 SHEETS | STA. | TO STA.

F.A.U. RTE.	SECTION	COUNTY	TOTAL SHEETS	SHEET NO.
1566	29 R-N-1	COOK	120	89
	TC-11	CONTRACT NO. 62377		

FED. ROAD DIST. NO. 1 | ILLINOIS | FED. AID PROJECT

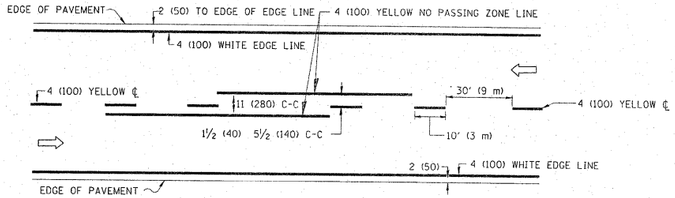

2-LANE ROADWAY

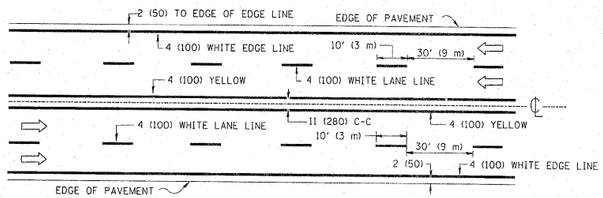

MULTI-LANE UNDIVIDED

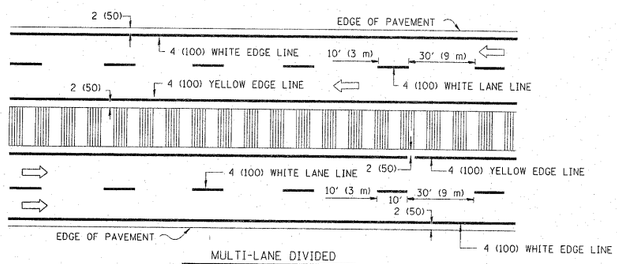

MULTI-LANE DIVIDED
WITH MOUNTABLE MEDIAN

NOTE: MEDIANS WITH BARRIER CURB DO NOT REQUIRE AN EDGE LINE

TYPICAL LANE AND EDGE LINE MARKING

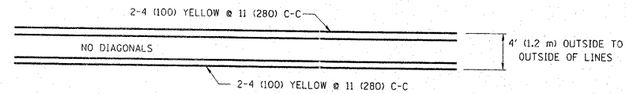

4' (1.2 m) WIDE MEDIANS ONLY

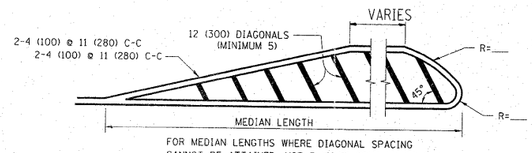

FOR MEDIAN LENGTHS WHERE DIAGONAL SPACING CANNOT BE ATTAINED, USE 5 (FIVE) EQUALLY SPACED DIAGONAL LINES.

DIAGONAL LINE SPACING: 50' (15 m) C-C (LESS THAN 30MPH (50 km/h))
75' (25 m) C-C 30MPH (50 km/h) TO 45MPH (70 km/h))
150' (45 m) C-C (MORE THAN 45MPH (70 km/h))

MEDIANS OVER 4' (1.2 m) WIDE

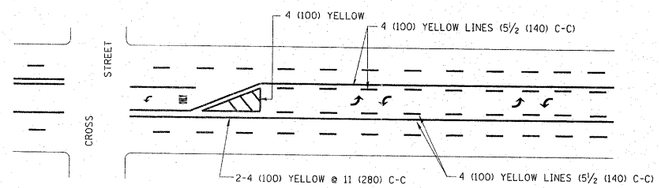

A MINIMUM OF TWO PAIRS OF TURN ARROWS SHALL BE USED, WHITE IN COLOR. ADDITIONAL PAIRS SHALL BE PLACED AT 200' (60 m) TO 300' (90 m) INTERVALS.

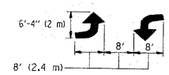

MEDIAN WITH TWO-WAY LEFT TURN LANE

TYPICAL PAINTED MEDIAN MARKING

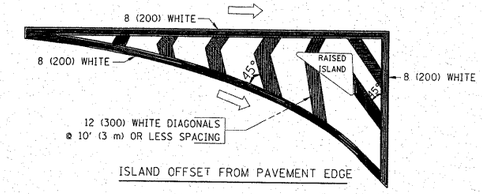

ISLAND OFFSET FROM PAVEMENT EDGE

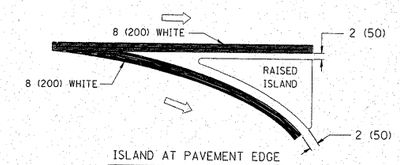

ISLAND AT PAVEMENT EDGE

TYPICAL ISLAND MARKING

TYPE OF MARKING	WIDTH OF LINE	PATTERN	COLOR	SPACING / REMARKS
CENTERLINE ON 2 4NE PAVEMENT	4 (100)	SKIP-DASH	YELLOW	10' (3 m) LINE WITH 30' (9 m) SPACE
CENTERLINE ON MULTI-LANE UNDIVIDED PAVEMENT	2 @ 4 (100)	SOLID	YELLOW	11 (280) C-C
NO PASSING ZONE LINES: FOR ONE DIRECTION FOR BOTH DIRECTIONS	4 (100) 2 @ 4 (100)	SOLID SOLID	YELLOW YELLOW	5½ (140) C-C FROM SKIP-DASH CENTERLINE 11 (280) C-C OMIT SKIP-DASH CENTERLINE BETWEEN
LANE LINES	4 (100) 5 (125) ON FREEWAYS	SKIP-DASH SKIP-DASH	WHITE WHITE	10' (3 m) LINE WITH 30' (9 m) SPACE
DOTTED LINES (EXTENSIONS OF CENTER, LANE OR TURN LANE MARKINGS)	SAME AS LINE BEING EXTENDED	SKIP-DASH	SAME AS LINE BEING EXTENDED	2' (600) LINE WITH 6' (1.8 m) SPACE
EDGE LINES	4 (100)	SOLID	YELLOW-LEFT WHITE-RIGHT	OUTLINE MOUNTABLE MEDIANS IN YELLOW; EDGE LINES ARE NOT USED NEXT TO BARRIER CURB
TURN LANE MARKINGS	6 (150) LINE; FULL SIZE LETTERS & SYMBOLS (8' (2.4m))	SOLID	WHITE	SEE TYPICAL TURN LANE MARKING DETAIL
TWO WAY LEFT TURN MARKING	2 @ 4 (100) EACH DIRECTION 8' (2.4m) LEFT ARROW	SKIP-DASH AND SOLID IN PAIRS	YELLOW WHITE	10' (3 m) LINE WITH 30' (9 m) SPACE FOR SKIP-DASH; 5½ (140) C-C BETWEEN SOLID LINE AND SKIP-DASH LINE SEE TYPICAL TWO-WAY LEFT TURN MARKING DETAIL
CROSSWALK LINES (PEDESTRIAN) A. DIAGONALS (BIKE & EQUESTRIAN) B. LONGITUDINAL BARS (SCHOOL)	2 @ 6 (150) 12 (300) @ 45° 12 (300) @ 90°	SOLID SOLID SOLID	WHITE WHITE WHITE	NOT LESS THAN 6' (1.8 m) APART 2' (600) APART 2' (600) APART SEE TYPICAL CROSSWALK MARKING DETAILS.
STOP LINES	24 (600)	SOLID	WHITE	PLACE 4' (1.2 m) IN ADVANCE OF AND PARALLEL TO CROSSWALK, IF PRESENT. OTHERWISE, PLACE AT DESIRED STOPPING POINT. PARALLEL TO CROSSROAD CENTERLINE, WHERE POSSIBLE
PAINTED MEDIANS	2 @ 4 (100) WITH 12 (300) DIAGONALS @ 45° NO DIAGONALS USED FOR 4' (1.2 m) WIDE MEDIANS	SOLID	YELLOW: TWO WAY TRAFFIC WHITE: ONE WAY TRAFFIC	11 (280) C-C FOR THE DOUBLE LINE SEE TYPICAL PAINTED MEDIAN MARKING.
GORE MARKING AND CHANNELIZING LINES	8 (200) WITH 12 (300) DIAGONALS @ 45°	SOLID	WHITE	DIAGONALS: 15' (4.5 m) C-C (LESS THAN 30MPH (50 km/h)) 20' (6 m) C-C 30MPH (50 km/h) TO 45MPH (70 km/h)) 30' (9 m) C-C (OVER 45MPH (70 km/h))
RAILROAD CROSSING	24 (600) TRANSVERSE LINES; "RR" IS 6' (1.8 m) LETTERS; 16 (400) LINE FOR "X"	SOLID	WHITE	SEE STATE STANDARD 780001 AREA OF: "R"=3.6 SQ. FT. (0.33 m^2) EACH "X"=54.0 SQ. FT. (5.0 m^2)
SHOULDER DIAGONALS	12 (300) @ 45°	SOLID	WHITE - RIGHT YELLOW - LEFT	50' (15 m) C-C (LESS THAN 30MPH (50 km/h)) 75' (25 m) C-C (30 MPH (50 km/h) TO 45MPH (70 km/h)) 150' (45 m) C-C (OVER 45MPH (70 km/h))

FOR FURTHER DETAILS ON PAVEMENT MARKING REFER TO STANDARD SPECIFICATIONS FOR ROAD AND BRIDGE CONSTRUCTION AND STATE STANDARD 780001.

All dimensions are in inches (millimeters) unless otherwise shown.

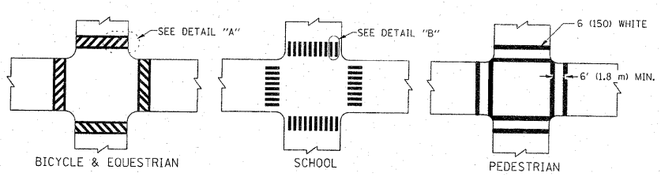

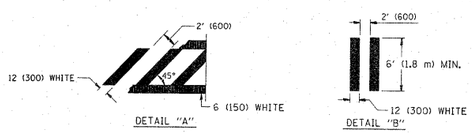

TYPICAL CROSSWALK MARKING

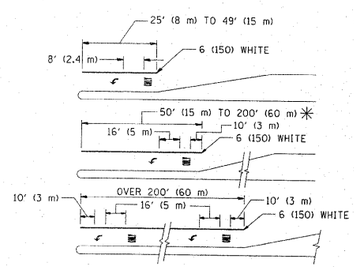

FULL SIZE LETTERS 8' (2.4 m) AND ARROWS SHALL BE USED.
↰ AREA = 15.6 SQ. FT. (1.5 m^2) ONLY AREA = 20.8 SQ. FT. (1.9 m^2)

✳ TURN LANES IN EXCESS OF 400' (120 m) IN LENGTH MAY HAVE AN ADDITIONAL SET OF ARROW - "ONLY" INSTALLED MIDWAY BETWEEN THE OTHER TWO SETS OF ARROW - "ONLY".

TYPICAL LEFT (OR RIGHT) TURN LANE

TYPICAL TURN LANE MARKING

FILE NAME = c:\pw_work\pwidot\steedpa\d0159915\DistSkd.dgn	USER NAME = steedpa	DESIGNED - EVERS	REVISED -T. RAMMACHER 10-27-94
		DRAWN -	REVISED -C. JUCIUS 09-09-09
	PLOT SCALE = 50.7884 ' / IN.	CHECKED -	REVISED -
	PLOT DATE = 2/3/2011	DATE - 03-19-90	REVISED -

STATE OF ILLINOIS
DEPARTMENT OF TRANSPORTATION

DISTRICT ONE
TYPICAL PAVEMENT MARKINGS

SCALE: NONE | SHEET NO. 1 OF 1 SHEETS | STA. | TO STA.

F.A.U. RTE.	SECTION	COUNTY	TOTAL SHEETS	SHEET NO.
1566	29 R-N-1	COOK	120	90
	TC-13	CONTRACT NO. 62377		
FED. ROAD DIST. NO. 1	ILLINOIS	FED. AID PROJECT		

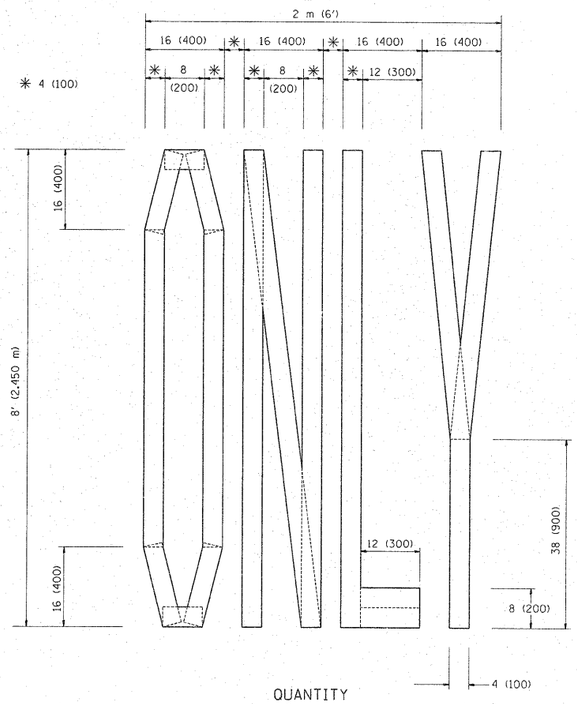

QUANTITY
4 (100) LINE = 64.1 ft. (19.7 m)
21.1 sq. ft. (1.97 sq. m)

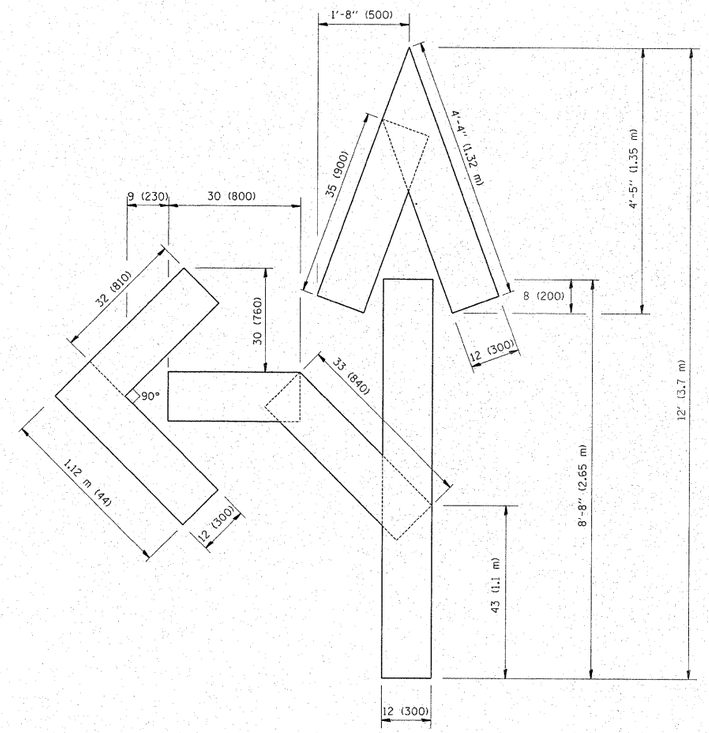

QUANTITY
4 (100) LINE = 82.5 ft. (25.3 m)
27.5 sq. ft. (2.53 sq. m)

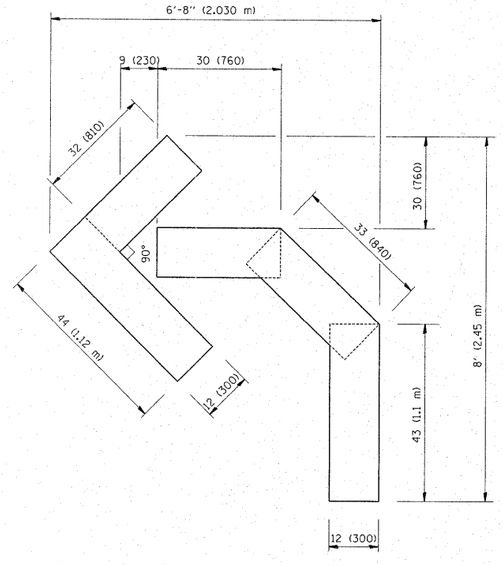

QUANTITY
4 (100) LINE = 45.5 ft. (13.9 m)
15.2 sq. ft. (1.39 sq. m)

All dimensions are in inches (millimeters) unless otherwise shown.

FILE NAME = c:\pw_work\pwidot\steedpa\d0159915\DistStd.dgn	USER NAME = steedpa	DESIGNED -	REVISED -T. RAMMACHER 06-05-96
		DRAWN -	REVISED -T. RAMMACHER 11-04-97
	PLOT SCALE = 50.7684 ' / IN.	CHECKED -	REVISED -T. RAMMACHER 03-02-98
	PLOT DATE = 2/9/2011	DATE - 09-18-94	REVISED -E. GOMEZ 08-28-00

STATE OF ILLINOIS
DEPARTMENT OF TRANSPORTATION

PAVEMENT MARKING LETTERS AND SYMBOLS FOR TRAFFIC STAGING

SCALE: NONE | SHEET NO. 1 OF 1 SHEETS | STA. | TO STA.

F.A.U. RTE.	SECTION	COUNTY	TOTAL SHEETS	SHEET NO.
1566	29 R-N-1	COOK	120	91
	TC-16	CONTRACT NO. 62377		
FED. ROAD DIST. NO. 1	ILLINOIS	FED. AID PROJECT		

SIGNING FOR FLAGGING OPERATIONS AT WORK ZONE OPENINGS

WORK ZONE EXIT OPENING

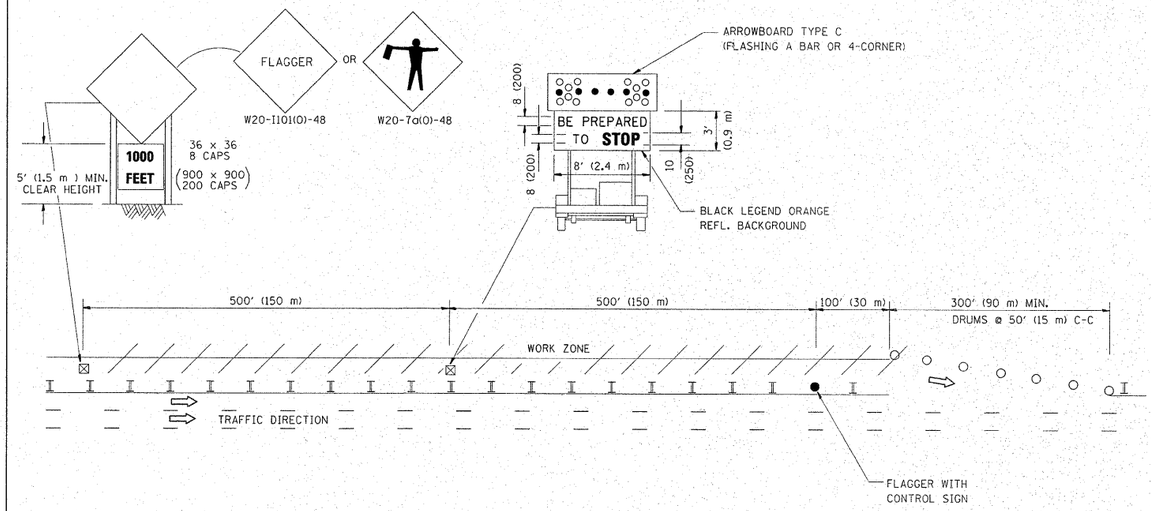

WORK ZONE ENTRY OPENING

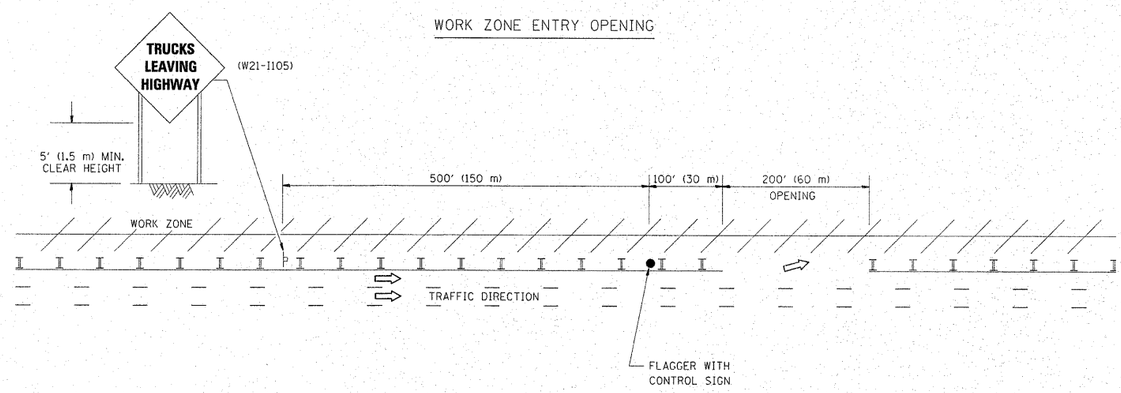

NOTES:

1. THE ARROWBOARD, THE FLAGGER AHEAD SIGN AND THE TRUCKS LEAVING HIGHWAY SIGN SHALL BE REMOVED OR TURNED AWAY FROM TRAFFIC AND THE EXIT AND ENTRY OPENINGS SHALL BE CLOSED WHEN THE FLAGGING OPERATION CEASES. NON OPERATING EQUIPMENT SHALL COMPLY WITH ARTICLE 701.11
2. WORK ZONE EXIT OPENINGS SHOULD BE A MINIMUM OF ONE HALF MILE APART.
3. EXITING THE WORK ZONE AT ANY PLACE OTHER THAN AT A WORK ZONE EXIT OPENING WILL BE PROHIBITED.
4. ALL VEHICLES SHALL ENTER THE WORK ZONE AT ENTRY OPENINGS, USING THEIR TURN SIGNALS TO WARN MOTORISTS

ALL DIMENSIONS ARE IN INCHES (MILLIMETERS) UNLESS OTHERWISE SHOWN

FILE NAME = c:\pw_work\pwidot\steedpa\d0159915\DistSpd.dgn	USER NAME = steedpa	DESIGNED -	REVISED - J.A.F. 04-03	
		DRAWN -	REVISED - J.A.F. 02-06	
	PLOT SCALE = 50.7684 ' / IN.	CHECKED -	REVISED - S.P.B. 01-07	
	PLOT DATE = 2/9/2011	DATE -	REVISED - S.P.B. 12-09	

STATE OF ILLINOIS
DEPARTMENT OF TRANSPORTATION

SIGNING FOR FLAGGING OPERATIONS AT WORK ZONE OPENINGS

SCALE: NONE | SHEET NO. 1 OF 1 SHEETS | STA. | TO STA.

F.A.U. RTE.	SECTION	COUNTY	TOTAL SHEETS	SHEET NO.
1566	29 R-N-1	COOK	120	92
	TC-18	CONTRACT NO. 62377		
FED. ROAD DIST. NO. 1	ILLINOIS	FED. AID PROJECT		

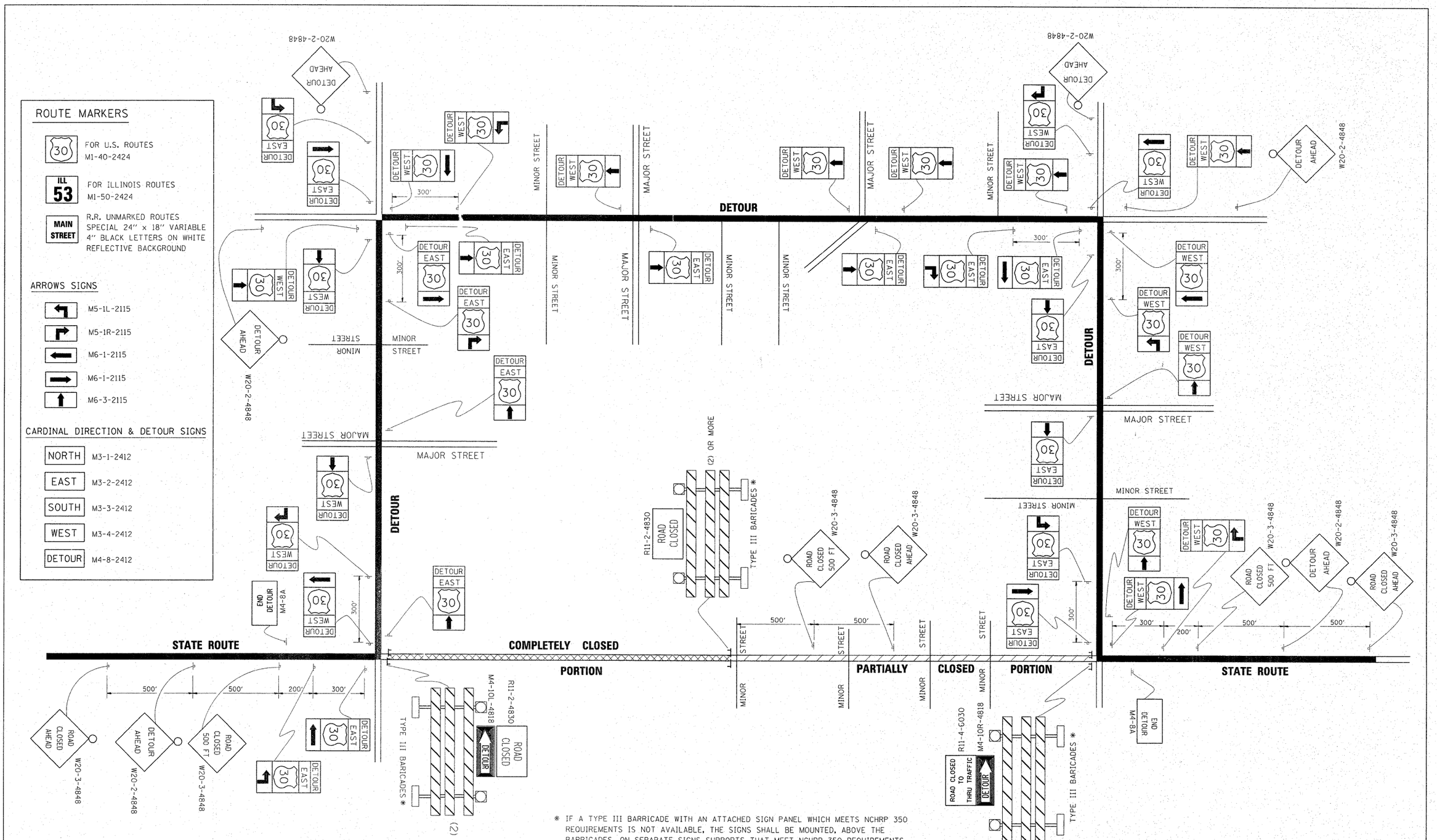

* IF A TYPE III BARRICADE WITH AN ATTACHED SIGN PANEL WHICH MEETS NCHRP 350 REQUIREMENTS IS NOT AVAILABLE, THE SIGNS SHALL BE MOUNTED, ABOVE THE BARRICADES, ON SEPARATE SIGNS SUPPORTS THAT MEET NCHRP 350 REQUIREMENTS.

FILE NAME = c:\pw_work\pwidot\steedpa\d0159915\DistStd.dgn	USER NAME = steedpa	DESIGNED -	REVISED - 10-18-02	STATE OF ILLINOIS DEPARTMENT OF TRANSPORTATION	DETOUR SIGNING FOR CLOSING STATE HIGHWAYS	F.A.U. RTE.	SECTION	COUNTY	TOTAL SHEETS	SHEET NO.
		DRAWN -	REVISED - R. BORO 09-14-09			1566	29 R-N-1	COOK	120	93
	PLOT SCALE = 50.7684 ' / IN.	CHECKED -	REVISED -			TC-21		CONTRACT NO. 62377		
	PLOT DATE = 2/9/2011	DATE -	REVISED -		SCALE: NONE	SHEET NO. 1 OF 1 SHEETS	STA. TO STA.	FED. ROAD DIST. NO. 1	ILLINOIS	FED. AID PROJECT

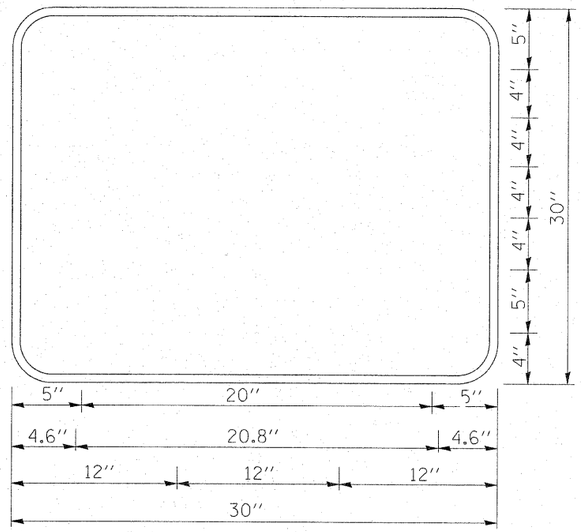

3.0'' RADIUS, 0.5'' BORDER, WHITE ON GREEN; REFLECTORIZED
''DRIVEWAY'' D; ''ENTRANCE'' D; STANDARD ARROW CUSTOM 12.0'' x 5.0''

NOTES:

1. HALF OF THE SIGNS WILL REQUIRE A LEFT HAND FACING ARROW.
2. TWO SIGNS SHALL BE USED AT EACH COMMERCIAL ENTRANCE PLACED BACK-TO-BACK: ONE WITH A RIGHT HAND ARROW (SHOWN) SHALL BE PLACED ON THE NEAR RIGHT SIDE THE DRIVEWAY AND ONE WITH A LEFT HAND ARROW SHALL BE PLACED ON THE FAR LEFT SIDE OF THE DRIVEWAY.
3. SIGNS TO BE PAID FOR AS ITEM ''TEMPORARY INFORMATION SIGNING''.

PANEL SIGN DESIGN TYPE 1

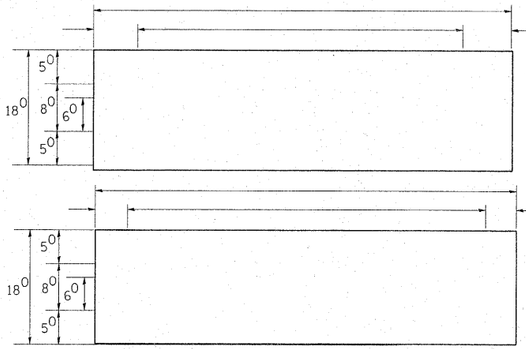

___ Sq. M. each
___ Sq. Ft. each
___ Required
Design Series __

___ Sq. M. each
___ Sq. Ft. each
___ Required
Design Series __

NOTE: SIGN DIMENSIONS ARE IN ENGLISH UNITS

PANEL SIGN DESIGN TYPE 2

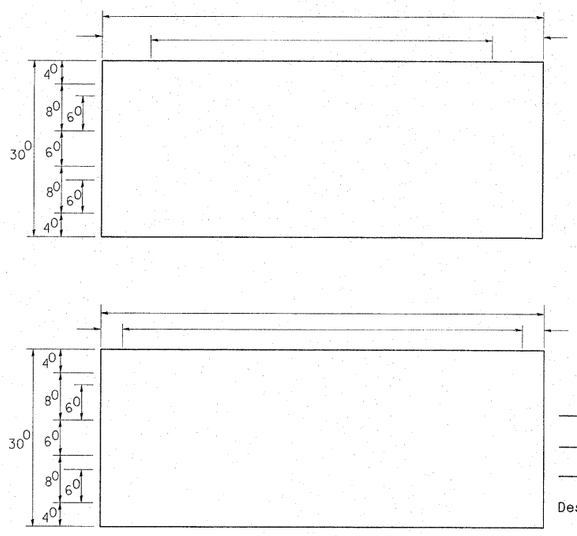

___ Sq. M. each
___ Sq. Ft. each
___ Required
Design Series __

___ Sq. M. each
___ Sq. Ft. each
___ Required
Design Series __

SUPPORTING CHANNELS

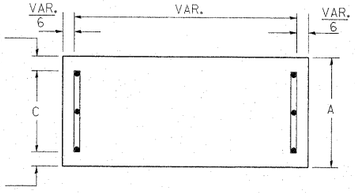

A	B	C
18″	2″	14″

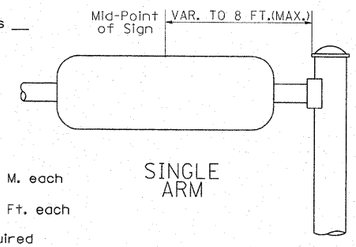

SINGLE ARM

SUPPORTING CHANNELS

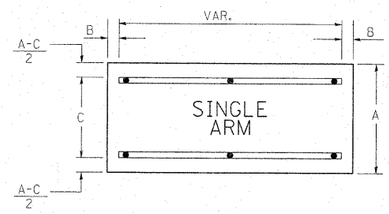

SINGLE ARM

A	B	C
18″	2″	12″
30″	2″	22″

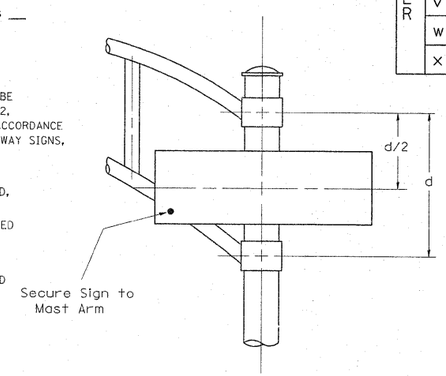

DUAL ARM

SIGNFIX ALUMINUM CHANNEL FRAMING SYSTEM shall be used. See Note #5.

GENERAL NOTES

1. WHERE MAST ARM MOUNTED STREET NAME SIGNS ARE SPECIFIED, THE MAST ARM ASSEMBLY AND POLES SHALL BE DESIGNED TO SUPPORT THE LOADINGS CALLED FOR ON STANDARDS 877001, 877002, 877006, 877011 AND 877012, AS APPLICABLE, PLUS TWO (2) SIGN PANELS 2′-6″ x 8′-0″ MOUNTED AS SHOWN. THE DESIGN SHALL BE IN ACCORDANCE WITH THE REQUIREMENTS OF THE CURRENT "STANDARD SPECIFICATIONS FOR STRUCTURAL SUPPORTS FOR HIGHWAY SIGNS, LUMINAIRES, AND TRAFFIC SIGNALS" AS PUBLISHED BY THE AMERICAN ASSOCIATION OF STATE HIGHWAY AND TRANSPORTATION OFFICIALS FOR 80 M.P.H. WIND VELOCITY.
2. ALL SIGNS SHALL HAVE A WHITE REFLECTORIZED LEGEND AND BORDER ON A GREEN REFLECTORIZED BACKGROUND, TYPE A SHEETING.
3. THE SIGN LENGTH SHOULD BE INCREASED IN 6-INCH INCREMENTS, BUT THE OVERALL LENGTH SHOULD NOT EXCEED 8′-0″.
4. ALL BORDERS SHALL BE ¾″ WIDE AND CORNER RADIUS SHALL BE 2-1/4 ″.
5. SIGNFIX ALUMINUM CHANNEL FRAMING SYSTEM SHALL BE USED FOR ALL SIGNS ATTACHED TO SIGNAL POLES AND POSTS. LOCAL SUPPLIERS OF THE SIGNFIX ALUMINUM CHANNEL FRAMING SYSTEM ARE:

* J.O. HERBERT CO.
MIDLOTHIAN, VA.

* WESTERN REMAC INC.
WOODRIDGE, IL.

PARTS LISTING:

SIGN CHANNEL	PART #HPN053 (MED. CHANNEL)
SIGN SCREWS	¼″ x 14 x 1″ H.W.H. #3 SELF TAPPING WITH NEOPRENE WASHER
BRACKETS	PART #HPN034 (UNIVERSAL) CHANNEL CLAMPS WITH STAINLESS STEEL STRAPPING

OTHER BRANDS OF MOUNTING HARDWARE ARE ACCEPTABLE, BASED UPON THE DEPARTMENT'S APPROVAL AND COMPATIBILITY WITH THE CHANNEL/BRACKET OF THE ABOVE PRODUCT.

Upper Case To Lower Case
Spacing Chart 8-6 Inch Series "C & D"

FIRST LETTER	SECOND LETTER: a c d e g o q		b h i k l m n p r u		f w		j		s t		v y		x		z	
SERIES	C	D	C	D	C	D	C	D	C	D	C	D	C	D	C	D
A W X	1 2	1 4	1 4	1 5	1 2	1 4	0 6	1 0	1 1	1 4	0 6	1 0	1 1	1 2	1 2	1 4
B	1 4	1 5	2 0	2 1	1 4	1 5	1 1	1 2	1 4	1 5	1 2	1 4	1 2	1 4	1 6	1 7
C E G	1 4	1 5	2 0	2 1	1 2	1 4	0 6	1 0	1 2	1 4	1 2	1 4	1 4	1 5	1 4	1 5
D O Q R	1 4	1 5	2 0	2 1	1 4	1 5	0 6	1 0	1 2	1 4	1 2	1 4	1 4	1 5	1 4	1 5
F	0 5	0 6	1 4	1 5	0 6	1 0	0 5	0 6	0 6	1 0	0 6	1 0	0 6	1 0	1 1	1 2
H I M N	2 0	2 1	2 2	2 4	2 0	2 1	1 4	1 5	1 6	1 7	1 6	1 7	2 0	2 1	2 0	2 1
J U	2 0	2 1	2 0	2 1	1 6	1 7	1 4	1 5	1 6	1 7	1 6	1 7	1 6	1 7	2 0	2 1
K L	1 1	1 2	1 6	1 7	1 1	1 2	0 5	0 6	1 1	1 2	1 1	1 2	1 1	1 2	1 2	1 4
P	1 2	1 4	1 4	1 5	1 2	1 4	0 5	0 6	1 1	1 2	1 1	1 2	1 2	1 4	1 2	1 4
S	1 2	1 4	1 6	1 7	1 2	1 4	0 6	1 0	1 2	1 4	1 2	1 4	1 2	1 4	1 2	1 4
T	1 1	1 2	1 6	1 7	0 6	1 0	0 6	1 0	1 1	1 2	1 1	1 2	1 1	1 2	1 2	1 4
V	0 6	1 0	1 4	1 5	1 1	1 2	0 6	1 0	1 2	1 4	1 2	1 4	1 2	1 4	1 2	1 4
Y	0 5	0 6	1 4	1 5	0 6	1 0	0 5	0 6	0 5	0 7	0 5	0 6	0 6	1 0	1 1	1 2
Z	1 6	1 7	2 2	2 4	1 6	1 7	1 2	1 4	1 6	1 7	1 6	1 7	1 6	1 7	2 0	2 1

Lower Case To Lower Case
Spacing Chart 6 Inch Series "C & D"

FIRST LETTER	SECOND LETTER: a c d e g o q		b h i k l m n p r u		f w		j		s t		v y		x		z	
SERIES	C	D	C	D	C	D	C	D	C	D	C	D	C	D	C	D
a d h g i j l m n q u	1 6	1 7	2 2	2 4	1 6	1 7	1 2	1 4	1 4	1 5	1 4	1 5	1 6	1 7	1 6	1 7
b f k o p s	1 2	1 4	1 6	1 7	1 1	1 2	0 5	0 6	1 1	1 2	1 1	1 2	1 2	1 4	1 2	1 4
c e	1 2	1 4	1 6	1 7	1 2	1 4	0 6	1 0	1 2	1 4	1 2	1 4	1 2	1 4	1 2	1 4
r	0 6	1 0	1 2	1 4	0 6	1 0	0 3	0 3	0 5	0 6	0 5	0 6	0 6	1 0	0 6	1 0
t z	1 2	1 4	1 6	1 7	1 2	1 4	0 6	1 0	1 1	1 2	1 1	1 2	1 2	1 4	1 2	1 4
v y	1 1	1 2	1 4	1 5	1 1	1 2	0 5	0 6	0 6	1 0	0 6	1 0	1 1	1 2	1 1	1 2
w	1 1	1 2	1 4	1 5	1 1	1 2	0 5	0 6	1 1	1 2	1 1	1 2	1 1	1 2	1 2	1 4
x	1 2	1 4	1 6	1 7	1 1	1 2	0 5	0 6	1 1	1 2	1 1	1 2	1 1	1 2	1 2	1 4

Number To Number
Spacing Chart 8 Inch Series "C & D"

FIRST NUMBER	SECOND NUMBER: 0		1		2		3		4		5		6		7		8		9	
SERIES	C	D	C	D	C	D	C	D	C	D	C	D	C	D	C	D	C	D	C	D
0 9	1 6	1 7	1 6	1 7	1 4	1 5	1 2	1 4	1 4	1 5	1 4	1 5	1 6	1 7	1 2	1 4	1 6	1 7	1 6	1 7
1	2 0	2 1	2 0	2 1	2 0	2 1	1 6	1 7	1 4	1 5	2 0	2 1	2 0	2 1	1 4	1 5	2 0	2 1	2 0	2 1
2 3 4	1 4	1 5	1 4	1 5	1 4	1 5	1 2	1 4	1 2	1 4	1 4	1 5	1 4	1 5	1 1	1 2	1 6	1 7	1 4	1 5
5	1 4	1 5	1 4	1 5	1 4	1 5	1 1	1 2	1 1	1 2	1 4	1 5	1 4	1 5	1 1	1 2	1 4	1 5	1 4	1 5
6	1 6	1 7	1 4	1 5	1 4	1 5	1 2	1 5	1 2	1 4	1 4	1 5	1 4	1 5	1 1	1 2	1 4	1 5	1 4	1 5
7	1 2	1 4	1 2	1 4	1 4	1 5	1 2	1 5	0 5	0 6	1 2	1 4	1 4	1 5	1 1	1 2	1 4	1 5	1 2	1 4
8	1 6	1 7	1 6	1 7	1 4	1 5	1 2	1 5	1 2	1 4	1 4	1 5	1 6	1 7	1 2	1 4	1 6	1 7	1 4	1 5

EXAMPLE, 2 (3) DENOTES 3″/8

UPPER AND LOWER CASE LETTER WIDTHS

LETTERS	6 INCH UPPER CASE LETTERS SERIES C	6 INCH UPPER CASE LETTERS SERIES D	8 INCH UPPER CASE LETTERS SERIES C	8 INCH UPPER CASE LETTERS SERIES D	LETTERS	6 INCH LOWER CASE LETTERS SERIES C	6 INCH LOWER CASE LETTERS SERIES D
A	3 6	5 0	5 0	6 5	a	3 5	4 2
B	3 2	4 0	4 3	5 3	b	3 5	4 2
C	3 2	4 0	4 3	5 3	c	3 5	4 1
D	3 2	4 0	4 3	5 3	d	3 5	4 2
E	3 0	3 5	4 0	4 7	e	3 5	4 2
F	3 0	3 5	4 0	4 7	f	2 3	2 6
G	3 2	4 0	4 3	5 3	g	3 5	4 2
H	3 2	4 0	4 3	5 3	h	3 5	4 2
I	0 7	0 7	1 1	1 2	i	1 1	1 1
J	3 0	3 6	4 0	5 0	j	2 0	2 2
K	3 2	4 1	4 3	5 4	k	3 5	4 2
L	3 0	3 5	4 0	4 7	l	1 1	1 1
M	3 7	4 5	5 1	6 1	m	6 0	7 0
N	3 2	4 0	4 3	5 3	n	3 5	4 2
O	3 4	4 2	4 5	5 5	o	3 6	4 3
P	3 2	4 0	4 3	5 3	p	3 5	4 2
Q	3 4	4 2	4 5	5 5	q	3 5	4 2
R	3 2	4 0	4 3	5 3	r	2 6	3 2
S	3 2	4 0	4 3	5 3	s	3 6	4 2
T	3 0	3 5	4 0	4 7	t	2 7	3 2
U	3 2	4 0	4 3	5 3	u	3 5	4 2
V	3 5	4 4	4 7	6 0	v	4 2	4 7
W	4 4	5 2	6 0	7 0	w	5 5	6 4
X	3 4	4 0	4 5	5 3	x	4 4	5 1
Y	3 6	5 0	5 0	6 6	y	4 6	5 3
Z	3 2	4 0	4 3	5 3	z	3 6	4 3

NUMBER	6 INCH SERIES C	6 INCH SERIES D	8 INCH SERIES C	8 INCH SERIES D
1	1 2	1 4	1 5	2 0
2	3 2	4 0	4 3	5 3
3	3 2	4 0	4 3	5 3
4	3 5	4 3	4 7	5 7
5	3 2	4 0	4 3	5 3
6	3 2	4 0	4 3	5 3
7	3 2	4 0	4 3	5 3
8	3 2	4 0	4 3	5 3
9	3 2	4 0	4 3	5 3
0	3 4	4 2	4 5	5 5

FILE NAME = c:\pw_work\pwidot\steedpa\d0159915\DistStd.dgn	USER NAME = steedpa	DESIGNED - DAG/BCK	REVISED - DAG 10/28/09
		DRAWN - BCK	REVISED -
	PLOT SCALE = 50.7684 ' / IN.	CHECKED - DAG/DAD	REVISED -
	PLOT DATE = 2/3/2011	DATE - 03-15-09	REVISED -

STATE OF ILLINOIS
DEPARTMENT OF TRANSPORTATION

DISTRICT ONE
MAST ARM MOUNTED STREET NAME SIGNS

SCALE: NONE | SHEET NO. 1 OF 1 SHEETS | STA. TO STA.

F.A.U. RTE.	SECTION	COUNTY	TOTAL SHEETS	SHEET NO.
1566	29 R-N-1	COOK	120	95

TS-02 CONTRACT NO. 62377

FED. ROAD DIST. NO. 1 | ILLINOIS | FED. AID PROJECT

NOTES:

1. REMOVAL OF EXISTING CONDUIT FROM THE HANDHOLE AND THE INSTALLATION OF THE CONDUIT BUSHING SHALL BE INCIDENTAL TO THE HANDHOLE.

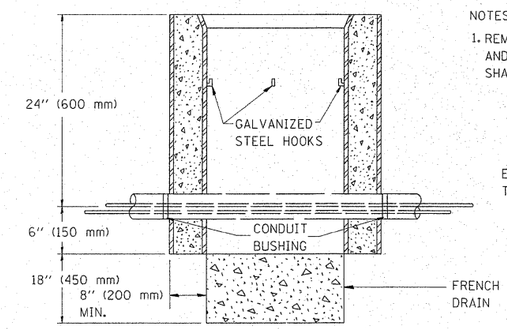

ELEVATION

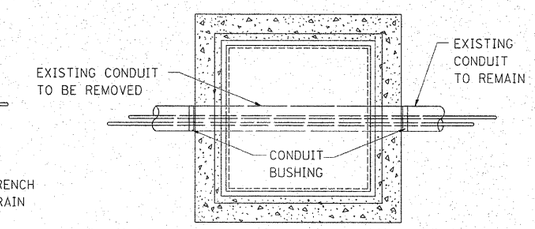

PLAN

DETAIL
HANDHOLE TO INTERCEPT EXISTING CONDUIT

FILE NAME = c:\pw_work\pwidot\steedpa\d0159915\DistStd.dgn	USER NAME = steedpa	DESIGNED -	REVISED - 10-01-00
		DRAWN -	REVISED -
	PLOT SCALE = 50.7684 ' / IN.	CHECKED -	REVISED -
	PLOT DATE = 2/3/2011	DATE -	REVISED -

STATE OF ILLINOIS
DEPARTMENT OF TRANSPORTATION

HANDHOLE TO INTERCEPT EXISTING CONDUIT

SCALE: NONE | SHEET NO. 1 OF 1 SHEETS | STA. TO STA.

F.A.U. RTE.	SECTION	COUNTY	TOTAL SHEETS	SHEET NO.
1566	29 R-N-1	COOK	120	96
	TS-03	CONTRACT NO. 62377		
FED. ROAD DIST. NO. 1	ILLINOIS	FED. AID PROJECT		

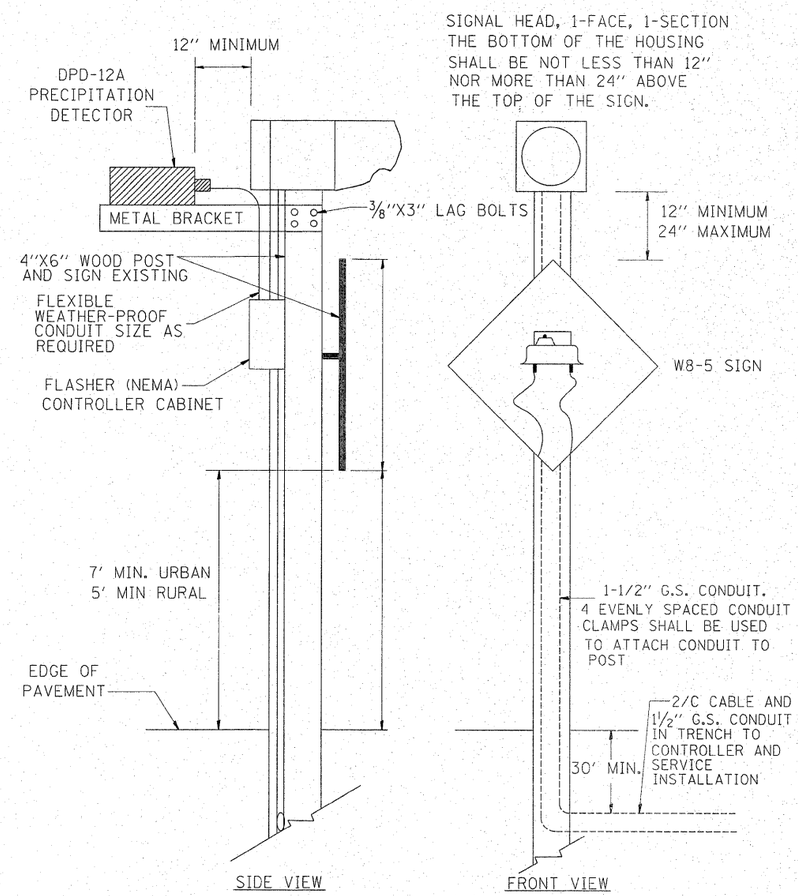

POST MOUNTED FLASHING BEACON WITH PRECIPITATION DETECTOR

(NOT TO SCALE)

FILE NAME = c:\pw_work\pwidot\steedpa\d0159915\Dist5\d.dgn	USER NAME = steedpa	DESIGNED -	REVISED - 01-01-07	
		DRAWN -	REVISED -	
	PLOT SCALE = 50.7684 ' / IN.	CHECKED -	REVISED -	
	PLOT DATE = 2/3/2011	DATE -	REVISED -	

STATE OF ILLINOIS
DEPARTMENT OF TRANSPORTATION

POST MOUNTED FLASHING BEACON
WITH PRECIPITATION DETECTOR

SCALE: NONE | SHEET NO. 1 OF 3 SHEETS | STA. | TO STA.

F.A.U. RTE.	SECTION	COUNTY	TOTAL SHEETS	SHEET NO.
1566	29 R-N-1	COOK	120	97
	TS-04	CONTRACT NO. 62377		
FED. ROAD DIST. NO. 1	ILLINOIS	FED. AID PROJECT		

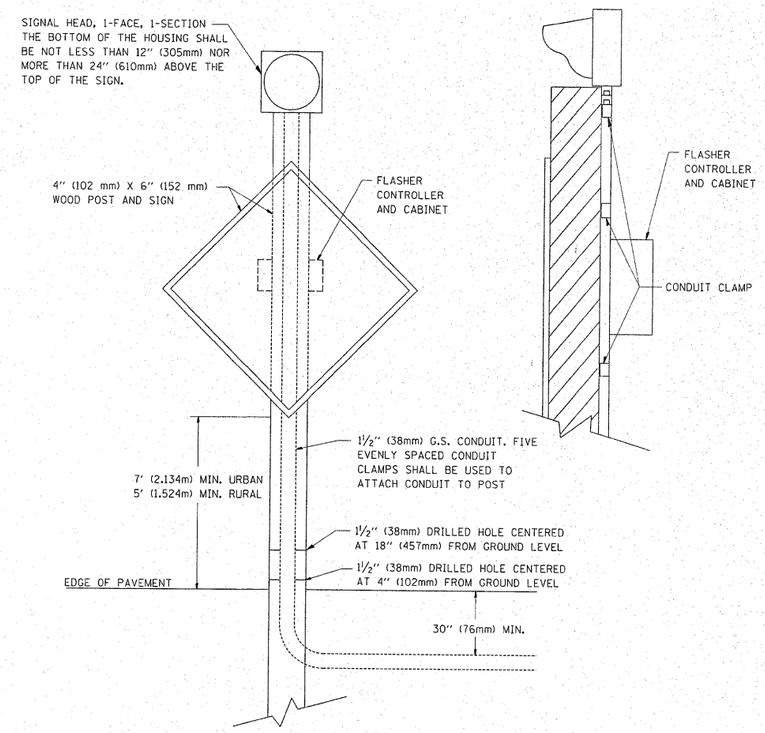

POST MOUNTED FLASHING BEACON
WITH CONTROLLER AND CABINET

FILE NAME = c:\pw_work\pwidot\steedpa\d0159915\D1stS2d.dgn	USER NAME = steedpa	DESIGNED -	REVISED - 01-01-07	STATE OF ILLINOIS DEPARTMENT OF TRANSPORTATION	POST MOUNTED FLASHING BEACON WITH CONTROLLER AND CABINET	F.A.U. RTE.	SECTION	COUNTY	TOTAL SHEETS	SHEET NO.
		DRAWN -	REVISED -			1566	29 R-N-1	COOK	120	98
	PLOT SCALE = 50.7684 ' / IN.	CHECKED -	REVISED -				TS-04	CONTRACT NO. 62377		
	PLOT DATE = 2/3/2011	DATE -	REVISED -		SCALE: NONE / SHEET NO. 2 OF 3 SHEETS / STA. / TO STA.	FED. ROAD DIST. NO. 1	ILLINOIS	FED. AID PROJECT		

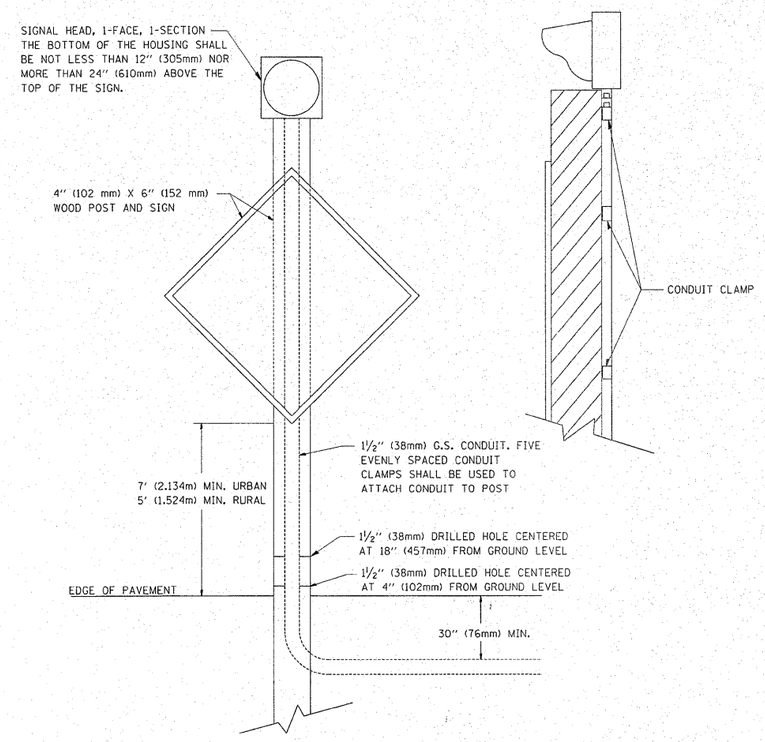

POST MOUNTED FLASHING BEACON

FILE NAME = c:\pw_work\pwidot\steedpa\d0159915\DistStd.dgn	USER NAME = steedpa	DESIGNED -	REVISED - 01-01-07	STATE OF ILLINOIS DEPARTMENT OF TRANSPORTATION	POST MOUNTED FLASHING BEACON	F.A.U. RTE.	SECTION	COUNTY	TOTAL SHEETS	SHEET NO.
		DRAWN -	REVISED -			1566	29 R-N-1	COOK	120	99
	PLOT SCALE = 50.7684 ' / IN.	CHECKED -	REVISED -				TS-04	CONTRACT NO. 62377		
	PLOT DATE = 2/3/2011	DATE -	REVISED -		SCALE: NONE / SHEET NO. 3 OF 3 SHEETS / STA. / TO STA.	FED. ROAD DIST. NO. 1	ILLINOIS	FED. AID PROJECT		

LOOP DETECTOR NOTES

1. EACH PAIR OF LOOP WIRES SHALL BE PLACED IN A SEPARATE EMPTY COILABLE NONMETALLIC CONDUIT FROM THE EDGE OF PAVEMENT TO THE HANDHOLE. SPACING BETWEEN THE HOLES DRILLED IN THE PAVEMENT SHALL NOT BE LESS THAN 6" (150 mm). EMPTY COILABLE NONMETALLIC CONDUIT SHALL BE INCLUDED IN THE COST OF THE LOOP WIRE.

2. THE NUMBER OF LOOP TURNS SHALL BE AS RECOMMENDED BY THE AMPLIFIER MANUFACTURER. ALL ADJACENT SIDES OF THE LOOPS SHALL BE INSTALLED IN SUCH A WAY THAT THE CURRENT FLOW IS IN THE SAME DIRECTION TO REINFORCE ITS MAGNETIC FIELDS FOR SMALL VEHICLE DETECTION.

3. EACH LOOP LEAD-IN SHALL BE IDENTIFIED AND PERMANENTLY TAGGED IN THE HANDHOLE. EACH LEAD-IN CABLE TAG SHALL INDICATE THE LOCATION OF THE LOOP, LOOP ROTATION (CLOCKWISE/COUNTERCLOCKWISE), LOOP LEAD-IN DIRECTION (IN OR OUT), LOOP CABLE NUMBER AND LOCATION IN CABINET, AND NUMBER OF TURNS IN THE DETECTOR LOOPS IN WATER PROOF INK AS INDICATED ON THE DISTRICT 1 STANDARD TRAFFIC SIGNAL DESIGN DETAIL. THE CONTRACTOR SHALL MARK LOOP LOCATIONS ON RECORD DRAWINGS AND PRESENT TO THE ENGINEER AFTER FINAL INSPECTION. LOOPS SHALL BE MARKED BY LANE AND LOOP NUMBER. SEE DETAIL BELOW.

4. ALL LOOP CABLE SHALL BE FASTENED WITH PLASTIC TIE WRAP TO THE HANDHOLE HOOKS.

5. IN ASPHALT PAVEMENT, LOOPS SHOULD BE PLACED IN THE BINDER AND DIVEHOLES MARKED AT THE CURB WITH A SAW-CUT. THE SAW-CUT SHALL BE CUT IN ACCORDANCE WITH LOCAL AND E.P.A. DUST CONTROL REQUIREMENTS. DETECTOR LOOP(S) SHALL NOT BE INSTALLED IN WET CONDITIONS AND THE SAW-CUTS MUST BE FREE OF DEBRIS AND RESIDUE SUCH AS DUST AND WATER WHICH IS TO BE ACHIEVED BY THE USE OF COMPRESSED AIR, WIRE BRUSHING AND HEAT DRYING ACCORDING TO SEALANT MANUFACTURER REQUIREMENTS. THE DETECTOR WIRE SHALL BE HELD IN PLACE BY THE USE OF FORM WEDGES. WEDGES SHALL BE SPACED NO MORE THAN 18" (450 mm) APART.

6. LOOP SPLICES SHALL BE SOLDERED USING A SOLDERING IRON. BLOW TORCHES OR OTHER DEVICES WHICH OXIDIZE COPPER CABLE SHALL NOT BE ALLOWED FOR SOLDERING OPERATIONS. SEE DETAIL BELOW RIGHT.

7. PREFORMED DETECTOR LOOPS SHALL BE USED, AS SHOWN ON THE PLANS, WHERE NEW CONCRETE PAVEMENT IS PROPOSED. THE INSTALLATION OF PREFORMED LOOPS SHALL BE IN ACCORDANCE WITH THE DISTRICT 1 SPECIFICATIONS OR AS DIRECTED BY THE ENGINEER.

LOOP LEAD-IN CABLE TAG

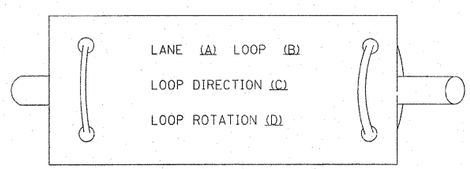

A. LANE 1 IS THE LANE CLOSEST TO THE CENTERLINE OF THE ROADWAY

B. LOOP #1 IS THE LOOP IN THE LANE CLOSEST TO THE INTERSECTION.

C. LABEL LOOP CABLE "IN" OR LOOP CABLE "OUT".

D. LABEL LOOP CABLE CLOCKWISE OR LOOP CABLE COUNTERCLOCKWISE.

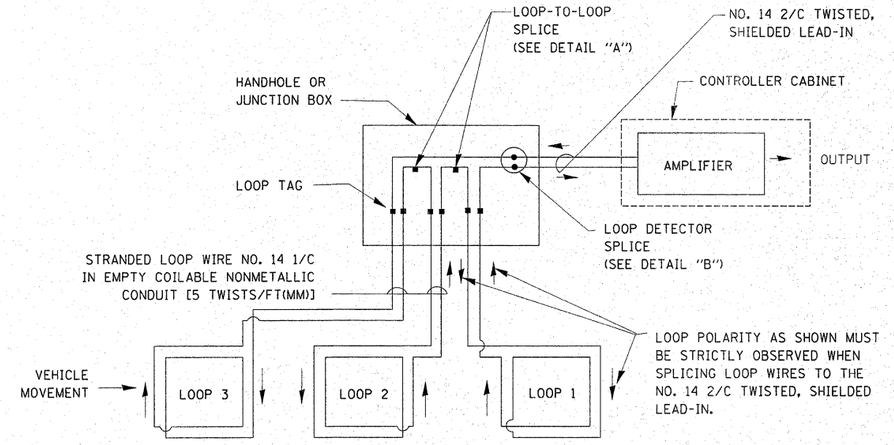

DETECTOR LOOP WIRING SCHEMATIC

- LOOPS SHALL BE SPLICED IN SERIES.
- SAW-CUTS SHALL BE A MINIMUM WIDTH OF 5/16" (8 mm).
- SAW-CUT DEPTHS SHALL BE 3" (75 mm). IF IN CONCRETE, THE SAW-CUT DEPTH SHALL BE TO THE TOP OF THE REINFORCEMENT.
- LOOP CORNERS SHALL BE DRILLED WITH A 2" (50 mm) DIAMETER CORE.

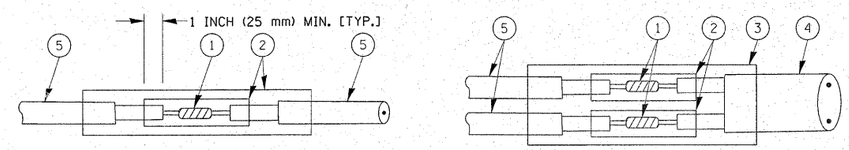

DETAIL "A"
LOOP-TO-LOOP SPLICE

DETAIL "B"
LOOP-TO-CONTROLLER SPLICE

TYPE I LOOP

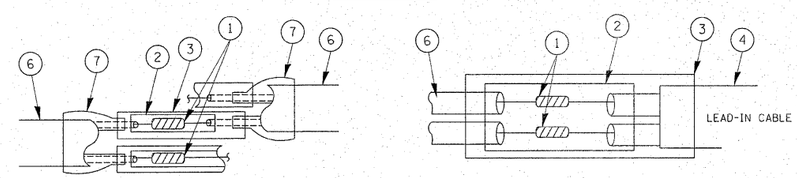

DETAIL "A"
LOOP-TO-LOOP SPLICE

PRE-FORMED LOOP

DETAIL "B"
LOOP-TO-CONTROLLER SPLICE

LOOP DETECTOR SPLICE

1. WESTERN UNION SPLICE SOLDERED WITH ROSIN CORE FLUX. ALL EXPOSED SURFACES OF THE SOLDER SHALL BE SMOOTH.
2. WCSMW 30/100 HEAT SHRINK TUBE, MINIMUM LENGTH 3" (75 mm), UNDERWATER GRADE.
3. WCS 200/750 HEAT SHRINK TUBE, MINIMUM LENGHT 6" (150 mm), UNDERWATER GRADE.
4. NO. 14 2/C TWISTED, SHIELDED CABLE.
5. LOOP CONDUCTOR WITH FLEXIBLE PLASTIC TUBE.
6. PRE-FORMED LOOP
7. XL POLYOLEFIN 2 CONDUCTOR BREAKOUT SEALS. TYCO CBR-2 OR APPROVED EQUAL

TRAFFIC SIGNAL MAST ARM AND SIGNAL POST

MAST ARM MOUNTED SIGNALS IN EXISTING, PROPOSED OR FUTURE SIDEWALK/BICYCLE PATH AREA. INTERSECTION SHOWN WITH PEDESTRIAN SIGNALS AND PEDESTRIAN PUSHBUTTON DETECTORS.

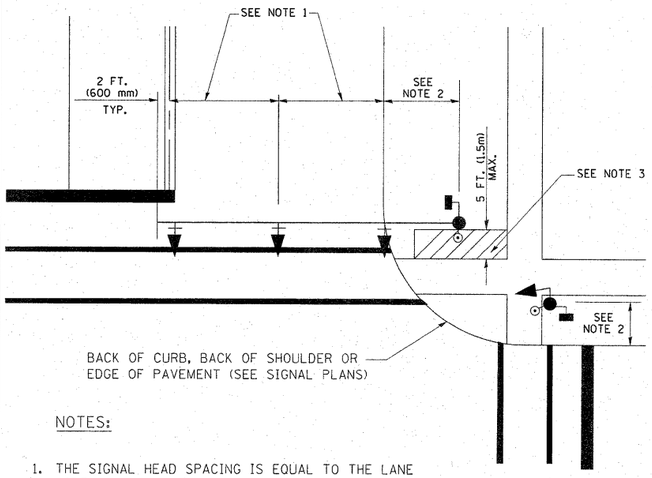

NOTES:

1. THE SIGNAL HEAD SPACING IS EQUAL TO THE LANE WIDTH OR AS SHOWN ON THE TRAFFIC SIGNAL PLAN.
2. REFER TO THE TRAFFIC SIGNAL EQUIPMENT OFFSET TABLE.
3. PROVIDE A LEVEL ALL-WEATHER SURFACE (CONCRETE SIDEWALK, ASPHALT BICYCLE PATH SURFACE OR MATCHING MATERIAL TO THE ADJACENT SURFACE) UP TO THE MAST ARM SHAFT OR THE SIGNAL POST.
4. THE FACE OF THE PEDESTRIAN PUSHBUTTON SHALL BE PARALLEL TO THE CROSSWALK TO BE USED.
5. THE LOCATIONS AND INSTALLATION OF PEDESTRIAN SIGNAL HEADS AND PEDESTRIAN PUSHBUTTONS SHALL MEET THE REQUIREMENTS OF THE MUTCD AND INFORMATION FOUND IN THE "AMERICANS WITH DISABILITIES ACT ACCESSIBILITY GUIDELINES FOR BUILDINGS AND FACILITIES."

PEDESTRIAN SIGNAL POST AND PEDESTRIAN PUSH BUTTON POST

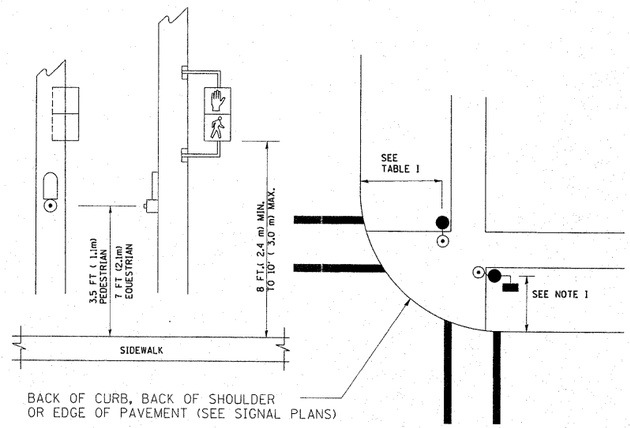

NOTES:

1. REFER TO THE TRAFFIC SIGNAL EQUIPMENT OFFSET TABLE.
2. PROVIDE A LEVEL ALL-WEATHER SURFACE (CONCRETE SIDEWALK, ASPHALT BICYCLE PATH SURFACE OR MATCHING MATERIAL TO THE ADJACENT SURFACE) UP TO THE PEDESTRIAN SIGNAL POST OR THE PEDESTRIAN PUSH BUTTON POST.
3. THE FACE OF THE PEDESTRIAN PUSHBUTTON SHALL BE PARALLEL TO THE CROSSWALK TO BE USED.
4. THE LOCATIONS AND INSTALLATION OF PEDESTRIAN SIGNAL HEADS AND PEDESTRIAN PUSHBUTTONS SHALL MEET THE REQUIREMENTS OF THE MUTCD AND INFORMATION FOUND IN THE "AMERICANS WITH DISABILITIES ACT ACCESSIBILITY GUIDELINES FOR BUILDINGS AND FACILITIES."

RECOMMENDED PUSHBUTTON LOCATIONS

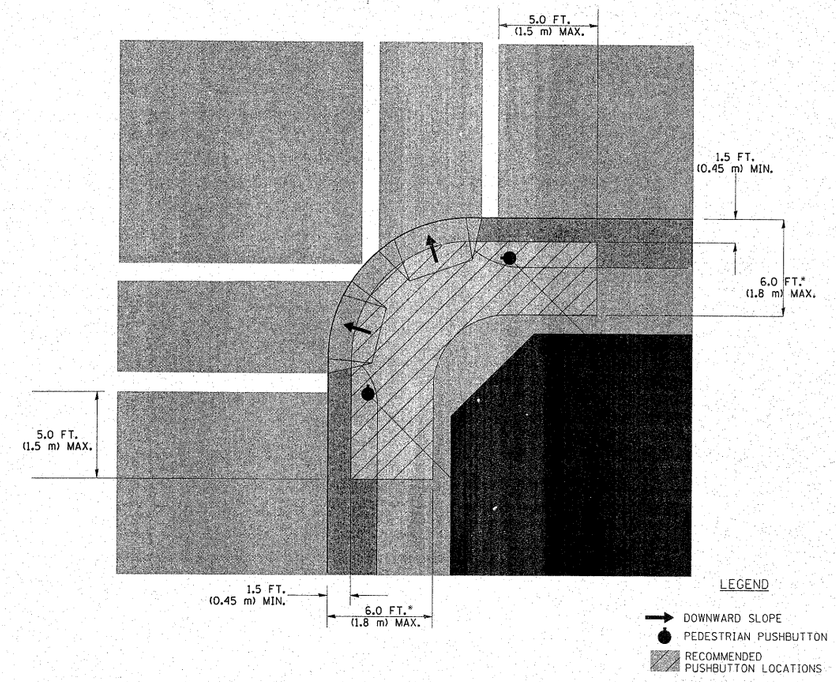

* WHERE THERE ARE CONSTRAINTS THAT MAKE IT IMPRACTICAL TO PLACE THE PEDESTRIAN PUSHBUTTON BETWEEN 1.5 FT (0.45 m) AND 6 FT (1.8 m) FROM THE EDGE OF THE CURB, SHOULDER, OR PAVEMENT, IT SHOULD NOT BE FURTHER THAN 10 FT (3 m) FROM THE EDGE OF CURB, SHOULDER, OR PAVEMENT.

** WHERE THERE ARE CONSTRAINTS ON A PARTICULAR CORNER THAT MAKE IT IMPRACTICAL TO PROVIDE THE 10 FT (3 m) SEPERATION BETWEEN THE TWO PEDESTRIAN PUSHBUTTONS, THE PUSHBUTTONS MAY BE PLACED CLOSER TOGETHER OR ON THE SAME POLE.

NOTES:

1. PEDESTRIAN SIGNAL HEADS SHALL BE MOUNTED WITH THE BOTTOM OF THE SIGNAL HOUSING INCLUDING BRACKETS NOT LESS THAN 8 FT (2.4 m) OR MORE THAN 10 FT (3 m) ABOVE SIDEWALK LEVEL, AND SHALL BE POSITIONED AND ADJUSTED TO PROVIDE MAXIMUM VISIBILITY AT THE BEGINNING OF THE CONTROLLED CROSSWALK.
2. THE BOTTOM OF THE SIGNAL HOUSING (INCLUDING BRACKETS) OF A VEHICULAR SIGNAL FACE THAT IS NOT LOCATED OVER A HIGHWAY SHALL BE AT LEAST 8 FT (2.4 m) BUT NOT MORE THAN 19 FT (5.8 m) ABOVE THE SIDEWALK OR, IF THERE IS NO SIDEWALK, ABOVE THE PAVEMENT GRADE AT THE CENTER OF THE ROADWAY.
3. THE BOTTOM OF THE SIGNAL HOUSING AND ANY RELATED ATTACHMENTS TO A SIGNAL FACE LOCATED OVER ANY PORTION OF A HIGHWAY SHALL BE ACCORDING TO CURRENT STATE STANDARDS 877001, 877002, 877006, 877011 AND 877012 WITH A MINIMUM OF 16 FT (5.0 m) AND A MAXIMUM OF 18 FT. (5.5 m) FROM THE HIGHEST POINT OF PAVEMENT.
4. THE BOTTOM OF THE TEMPORARY SPAN WIRE MOUNTED SIGNAL HOUSING AND ANY RELATED ATTACHMENTS TO A SIGNAL FACE LOCATED OVER ANY PORTION OF A HIGHWAY SHALL BE ACCORDING TO CURRENT STATE STANDARD 880001 WITH A MINIMUM OF 17 FT (5.18 m) FROM THE HIGHEST POINT OF PAVEMENT.
5. THE TOP OF THE SIGNAL HOUSING OF A SIGNAL FACE LOCATED OVER ANY PORTION OF A HIGHWAY SHALL NOT BE MORE THAN 25.6 FT (7.8 m) ABOVE THE PAVEMENT.

TRAFFIC SIGNAL EQUIPMENT OFFSET

TRAFFIC SIGNAL EQUIPMENT	COMBINATION CONCRETE CURB AND GUTTER (MINIMUM DISTANCE FROM BACK OF CURB TO CENTERLINE OF FOUNDATION)	SHOULDER/NON-CURBED AREA (MINIMUM DISTANCE FROM EDGE OF PAVEMENT TO CENTERLINE OF FOUNDATION)
TRAFFIC SIGNAL MAST ARM POLE	6 FT (1.8m)	SHOULDER WIDTH + 2 FT (0.6m), MINIMUM 10 FT (3.0m)
TRAFFIC SIGNAL POST	4 FT (1.2m)	SHOULDER WIDTH + 2 FT (0.6m), MINIMUM 10 FT (3.0m)
PEDESTRIAN SIGNAL POST	4 FT (1.2m)	SHOULDER WIDTH + 2 FT (0.6m), MINIMUM 10 FT (3.0m)
PEDESTRIAN PUSHBUTTON POST	4 FT (1.2m)	SHOULDER WIDTH + 2 FT (0.6m), MINIMUM 10 FT (3.0m)
TEMPORARY WOOD POLE	6 FT (1.8m)	SHOULDER WIDTH + 2 FT (0.6m), MINIMUM 10 FT (3.0m)
CONTROLLER CABINET	6 FT (1.8m) MINIMUM DISTANCE SEE NOTE 2	SHOULDER WIDTH + 6 FT (1.8m), MINIMUM 16 FT (4.9m) SEE NOTE 3.
SERVICE INSTALLATION, GROUND MOUNT	6 FT (1.8m) MINIMUM DISTANCE SEE NOTE 2	SHOULDER WIDTH + 6 FT (1.8m), MINIMUM 16 FT (4.9m) SEE NOTE 3.

NOTES:

1. CONTACT THE "AREA TRAFFIC SIGNAL MAINTENANCE AND OPERATIONS ENGINEER" FOR ASSISTANCE IN LOCATING THE TRAFFIC SIGNAL EQUIPMENT WHEN THERE ARE CONFLICTS WITH DITCHES OR THE MINIMUM OFFSET DISTANCES CANNOT BE MET.
2. MINIMUM DISTANCE FROM THE BACK OF CURB TO THE ROADWAY SIDE OF THE FOUNDATION.
3. MINIMUM DISTANCE FROM THE EDGE OF PAVEMENT TO THE ROADWAY SIDE OF THE FOUNDATION.
4. ANY CHANGES TO THE OFFSETS OF THE FOUNDATIONS, FROM THE MINIMUM DISTANCES LISTED IN THE "TRAFFIC SIGNAL EQUIPMENT OFFSET" CHART AND THE TRAFFIC SIGNAL INSTALLATION PLAN, COULD EFFECT THE PLACEMENT OF THE SIGNAL HEADS, PEDESTRIAN SIGNAL HEADS AND THE PEDESTRIAN PUSHBUTTONS. THE SIGNAL HEAD PLACEMENT ON THE MAST ARMS SHALL REMAIN AS PER THE TRAFFIC SIGNAL INSTALLATION PLAN AND THE "TRAFFIC SIGNAL MAST ARM AND SIGNAL POST" DETAIL ABOVE. THE PROPOSED MAST ARM LENGTHS MAY NEED TO BE REVISED TO MEET THE ABOVE REQUIREMENTS. THE PEDESTRIAN SIGNAL HEADS AND PEDESTRIAN PUSHBUTTONS MUST MEET THE REQUIREMENTS UNDER THE DETAILS ON THIS SHEET.

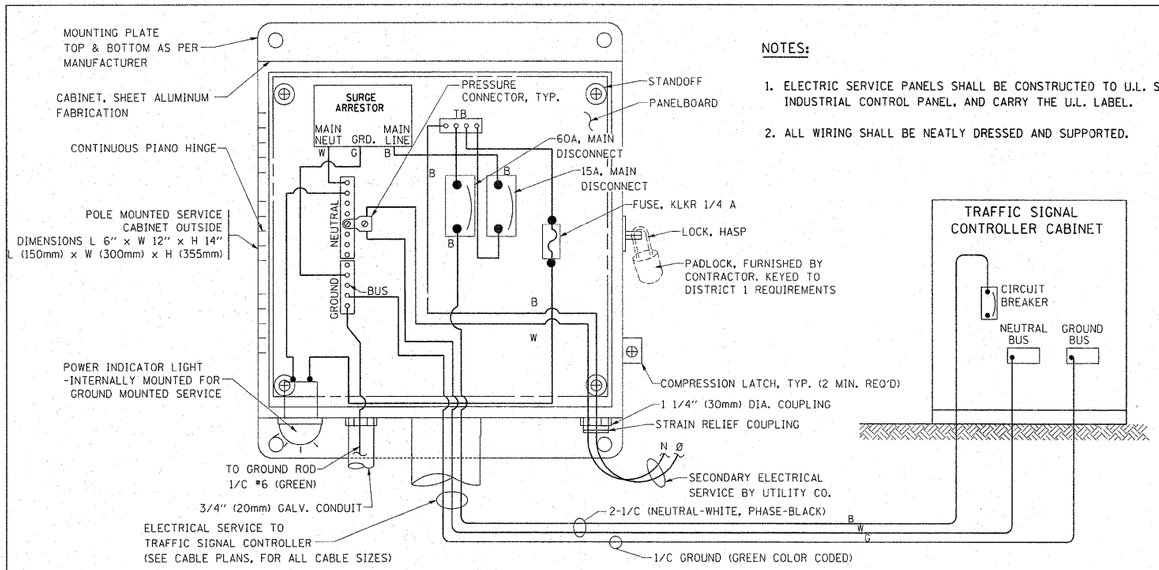

NOTES:

1. ELECTRIC SERVICE PANELS SHALL BE CONSTRUCTED TO U.L. STD 508, INDUSTRIAL CONTROL PANEL, AND CARRY THE U.L. LABEL.
2. ALL WIRING SHALL BE NEATLY DRESSED AND SUPPORTED.

ELECTRICAL SERVICE – PANEL DIAGRAM (TYPICAL FOR POLE AND GROUND MOUNTED SERVICE)

SERVICE INSTALLATION POLE MOUNT (SHOWN)

(NOT TO SCALE)

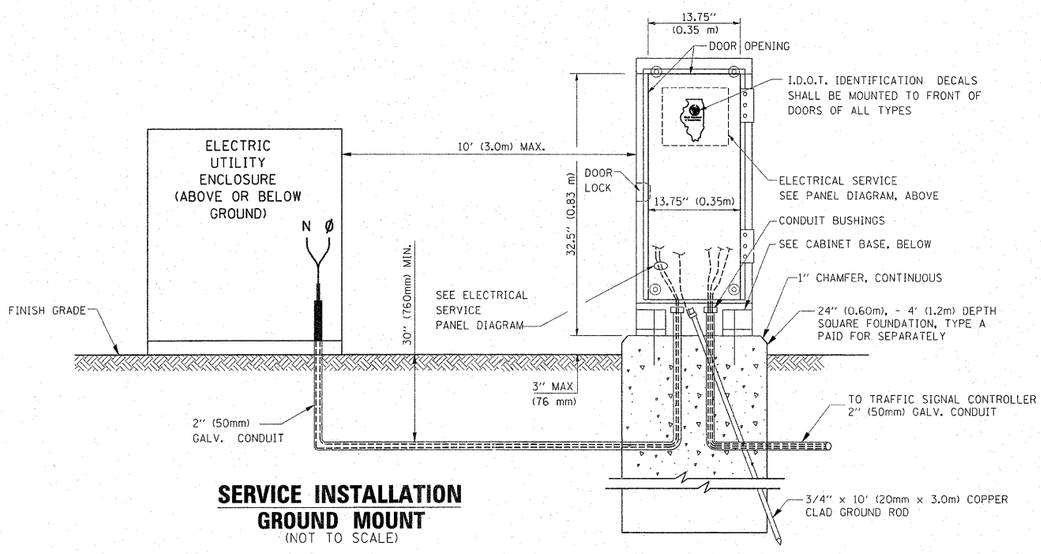

SERVICE INSTALLATION GROUND MOUNT

(NOT TO SCALE)

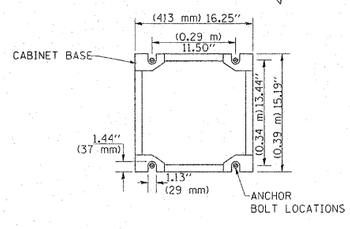

CABINET – BASE BOLT PATTERN

(NOT TO SCALE)

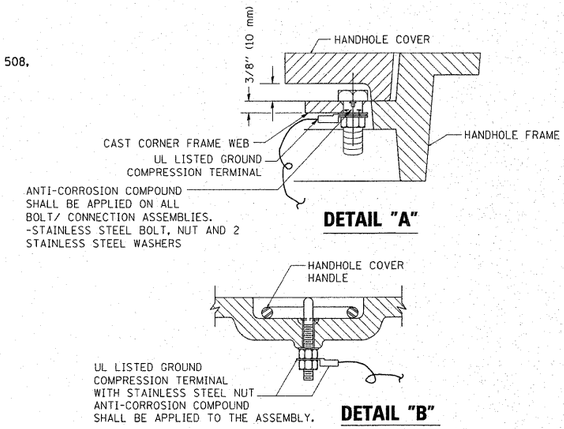

NOTES:

GROUNDING SYSTEM

1. THE GROUNDING SYSTEM SHALL CONSIST OF AN INSULATED CONDUCTOR TYPE XLP, NO. 6 A.W.G., STRANDED COPPER TO BE INSTALLED IN RACEWAYS. THE GROUNDING CABLE SHALL BE INSTALLED IN A CONTINUOUS MANNER AS SHOWN ON THE CABLE PLAN PROVIDED. ALL GROUNDING CONDUCTORS SHALL BE BONDED TO METAL ENCLOSURE (HANDHOLE, POST, MAST ARM, CONTROLLER, ETC.). GROUND ROD SHALL BE 3/4" DIA. x 10'-0" (20mm x 3.0m) LONG, COPPER CLAD. ONE GROUND ROD SHALL BE INSTALLED AT ALL POST FOUNDATIONS, POLE FOUNDATIONS, CONTROLLER CABINET FOUNDATION AND ELECTRICAL SERVICE INSTALLATION AS INDICATED ON THE CABLE PLAN. IF THERE ARE ANY SPECIAL CONDITIONS SUCH AS SUB-SURFACE CONDITIONS OR INSTALLATION PROBLEMS, THE RESIDENT ENGINEER SHALL BE NOTIFIED OR CONTACT THE BUREAU OF TRAFFIC, ILLINOIS DEPARTMENT OF TRANSPORTATION DISTRICT ONE AT (847) 705-4139.
2. THE NEUTRAL CONDUCTOR AND THE GROUND CONDUCTOR SHALL BE CONNECTED IN THE SERVICE INSTALLATION. AT NO OTHER POINT IN THE TRAFFIC SIGNAL SYSTEM SHALL THE NEUTRAL AND GROUND CONDUCTORS BE CONNECTED.
3. ALL EQUIPMENT GROUNDING CONDUCTORS SHALL TERMINATE AT THE GROUND BUS IN THE CONTROLLER CABINET.
4. THE CONTRACTOR SHALL PROVIDE A GROUND CABLE WITH CONNECTORS BETWEEN THE HANDHOLE COVER AND HANDHOLE FRAME.

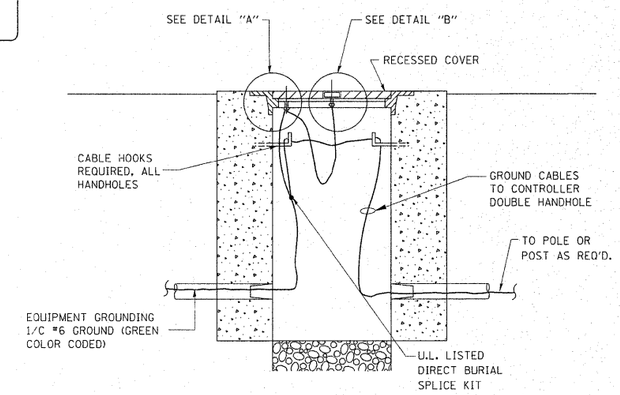

HANDHOLE COVER & FRAME – GROUNDING DETAIL

(NOT TO SCALE)

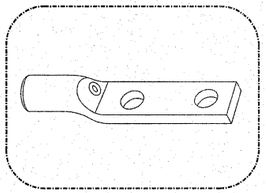

HEAVY-DUTY COMPRESSION TERMINAL
(BURNDY TYPE YGHA OR APPROVED EQUAL)

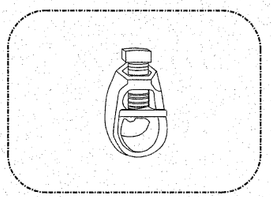

3/4" (20mm) HEAVY-DUTY GROUND ROD CLAMP
(BURNDY TYPE GRC OR APPROVED EQUAL)

NOTES:

- ALL CLAMPS SHALL BE BRONZE OR COPPER, UL APPROVED.
- GROUND CABLE SHALL BE LOOPED OVER HOOKS IN THE HANDHOLES
  6.5' (2.0m) SLACK SHALL BE PROVIDED IN SINGLE HANDHOLES
  13' (4.0m) OF SLACK SHALL BE PROVIDED IN DOUBLE HANDHOLES.
  5' (1.4m) OF SLACK SHALL BE PROVIDED BETWEEN FRAME AND COVER.

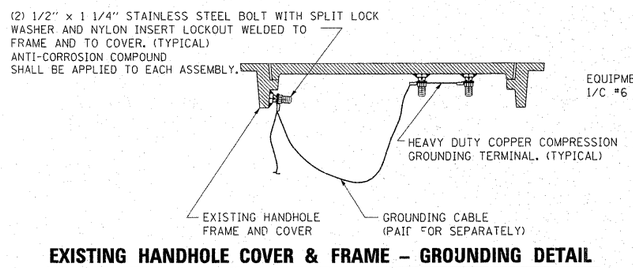

EXISTING HANDHOLE COVER & FRAME – GROUNDING DETAIL

(NOT TO SCALE)

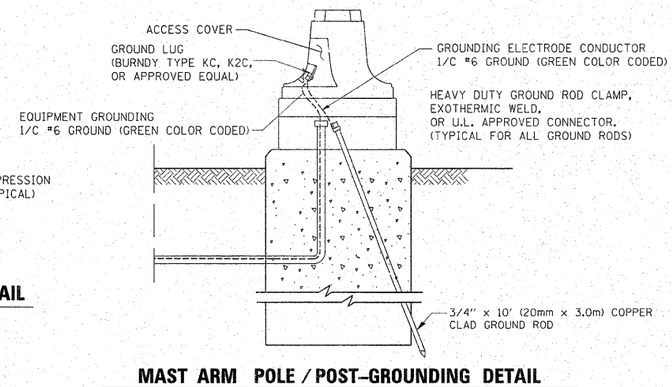

MAST ARM POLE / POST–GROUNDING DETAIL

(NOT TO SCALE)

FILE NAME = c:\pw_work\pwidot\steedpa\d0159915\DistSkd.dgn	USER NAME = steedpa	DESIGNED - DAD	REVISED -	STATE OF ILLINOIS DEPARTMENT OF TRANSPORTATION	DISTRICT ONE STANDARD TRAFFIC SIGNAL DESIGN DETAILS	F.A.U. RTE.	SECTION	COUNTY	TOTAL SHEETS / SHEET NO.
		DRAWN - BCK	REVISED -			1566	29 R-N-1	COOK	120 / 102
	PLOT SCALE = 50.7684 ' / IN.	CHECKED - DAD	REVISED -				TS-05	CONTRACT NO. 62377	
	PLOT DATE = 2/3/2011	DATE - 10-28-09	REVISED -		SCALE: NONE / SHEET NO. 3 OF 6 SHEETS / STA. TO STA.	FED. ROAD DIST. NO. 1	ILLINOIS	FED. AID PROJECT	

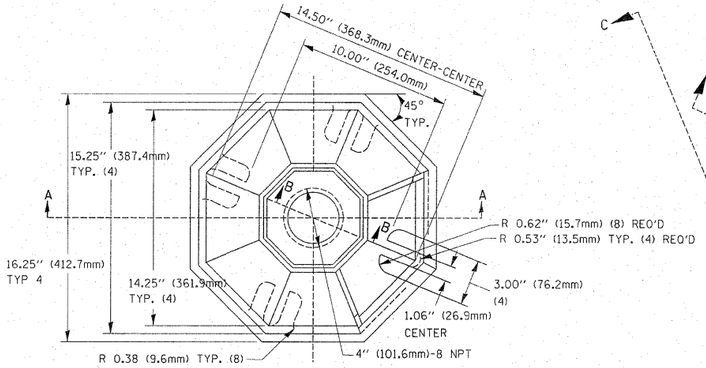

TOP VIEW

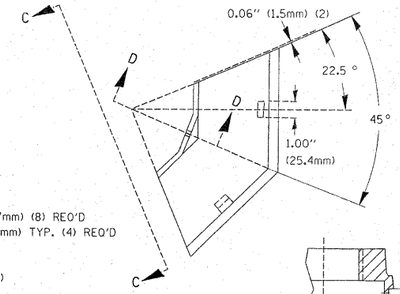

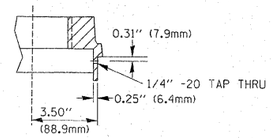

SECTION B-B

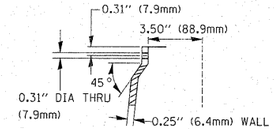

SECTION D-D

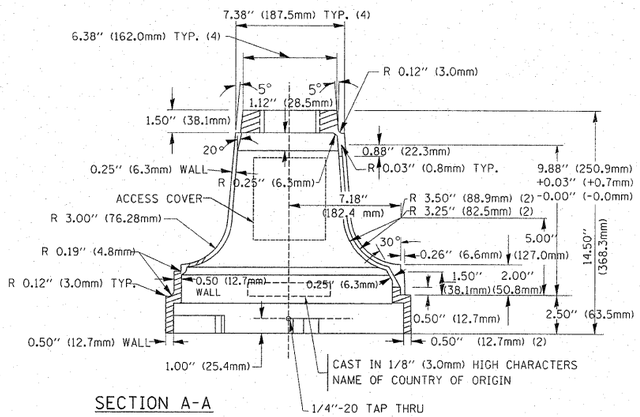

SECTION A-A

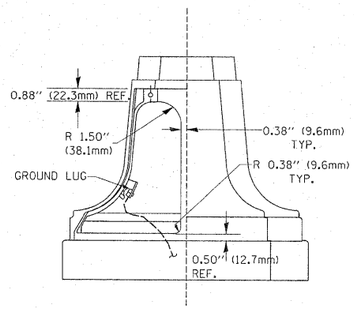

VIEW C-C

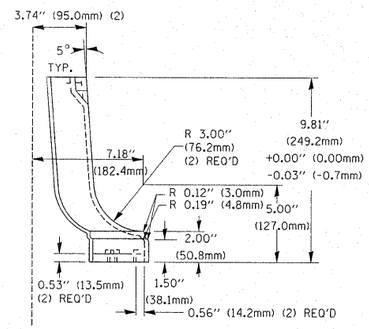

TRAFFIC SIGNAL POST - MOUNTING BASE - TYPE A

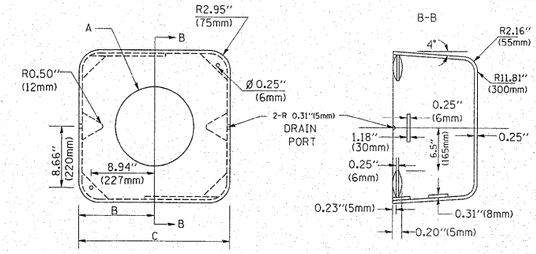

MATERIAL:
- ASTM A36 STEEL
- ASTM A-123 HOT DIPPED GALVANIZED

A	B	C	HEIGHT	WEIGHT
VARIES	9.5"(241mm)	19"(483mm)	7" (178mm) - 12" (300mm)	53 lbs (24kg)
VARIES	10.75"(273mm)	21.5"(546mm)	7" (178mm) - 12" (300mm)	68 lbs (31 kg)
VARIES	13.0"(330mm)	26"(660mm)	7" (178mm) - 12" (300mm)	81 lbs (37 kg)
VARIES	18.5"(470mm)	37"(940mm)	7" (178mm) - 12" (300mm)	126 lbs (57 kg)

SHROUD

NOTES:

1. DIMENSION "A" IS EQUAL TO THE DIAMETER OF THE MAST ARM POLE AT THE TOP OF THE SHROUD. THE SHROUD SHALL BE TIGHT TO THE MAST ARM POLE.
2. THE SUPPLIER SHALL VERIFIED THE ABOVE DIMENSIONS BASED ON MAST ARM REQUIREMENTS.
3. THE HEIGHT OF THE SHROUD SHALL COVER THE ANCHOR BOLTS, NUTS AND MAST ARM POLE BASE.

NOTE:
SUPPORT EXISTING CABINET AND CONTROL EQUIPMENT ABOVE FOUNDATION TO KEEP TRAFFIC SIGNAL FUNCTIONING WHILE FOUNDATION MODIFICATION WORK IS PROCEEDING.

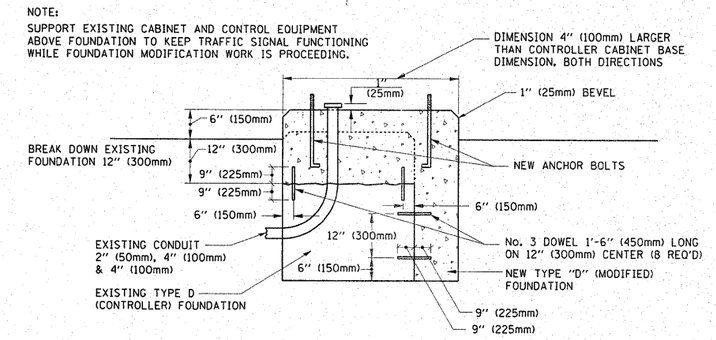

MODIFY EXISTING TYPE "D" FOUNDATION

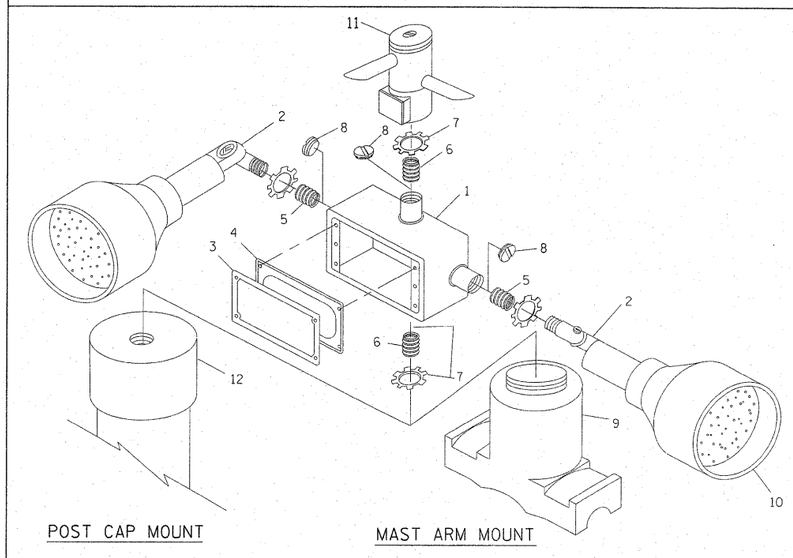

POST CAP MOUNT

MAST ARM MOUNT

EMERGENCY VEHICLE DETECTOR WITH CONFIRMATION BEACON MOUNTING DETAIL

ITEM NO.	IDENTIFICATION
1	OUTLET BOX- GALV. 21 CU.IN. (0.000344 CU-M)
2	LAMP HOLDER AND COVER
3	OUTLET BOX COVER
4	RUBBER COVER GASKET
5	REDUCING BUSHING
6	¾"(19 mm) CLOSE NIPPLE
7	¾"(19 mm) LOCKNUT
8	¾"(19 mm) HOLE PLUG
9	SADDLE BRACKET - GALV.
10	6 WATT PAR 38 LED FLOOD LAMP
11	DETECTOR UNIT
12	POST CAP [18 FT. (5.4 m) POST MIN.]

NOTES:

1. ALL ELECTRICAL ITEMS, EXCEPT ITEMS #2 AND #11 SHALL BE ALUMINUM OR GALVANIZED
2. ITEM #1- OZ/GEDNEY FSX-1-50 OR EQUIVALENT
   ITEM #2- MULBERRY CON-O-SHADE LAMP SHIELD OR EQUIVALENT
   ITEM #9- "BAND-IT" SADDLE BRACKET OR EQUIVALENT
3. WHEN POST MOUNTING IS SPECIFIED, ITEM #9 SHALL NOT BE REQUIRED. THE DETECTION UNIT SHALL BE MOUNTED DIRECTLY ON TOP OF THE CAP BY DRILLING AND TAPPING A ¾"(19 mm) HOLE WITH PIPE THREADS. THE POST CAP SHALL EITHER BE SCREWED TO THE TOP OF THE POST OR A MINIMUM OF 3 TIGHTENING SCREWS SHALL BE REQUIRED ON EACH CAP.

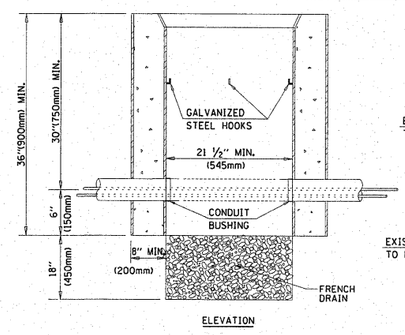

ELEVATION

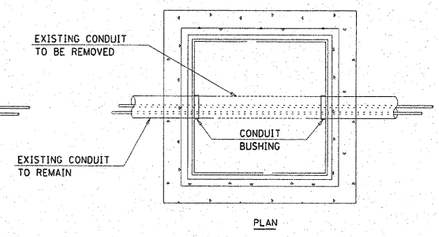

PLAN

NOTES:

1. HANDHOLE CONSTRUCTED PER STATE STANDARD 814001.
2. REMOVAL OF THE EXISTING CONDUIT FROM THE HANDHOLE AND THE INSTALLATION OF THE CONDUIT BUSHINGS SHALL BE INCIDENTAL TO THE HANDHOLE.

HANDHOLE TO INTERCEPT EXISTING CONDUIT

FILE NAME = c:\pw_work\pwidot\steedpa\d215991\DistSd.dgn	USER NAME = steedpa	DESIGNED - DAD	REVISED -
	PLOT SCALE = 50.7684 ' / IN.	DRAWN - BCK	REVISED -
	PLOT DATE = 2/3/2011	CHECKED - DAD	REVISED -
		DATE - 10-28-09	REVISED -

STATE OF ILLINOIS
DEPARTMENT OF TRANSPORTATION

DISTRICT ONE
STANDARD TRAFFIC SIGNAL DESIGN DETAILS

SCALE: NONE | SHEET NO. 4 OF 6 SHEETS | STA. | TO STA.

F.A.U. RTE.	SECTION	COUNTY	TOTAL SHEETS	SHEET NO.
1566	29 R-N-1	COOK	120	103
	TS-05	CONTRACT NO. 62377		

FED. ROAD DIST. NO. 1 | ILLINOIS | FED. AID PROJECT

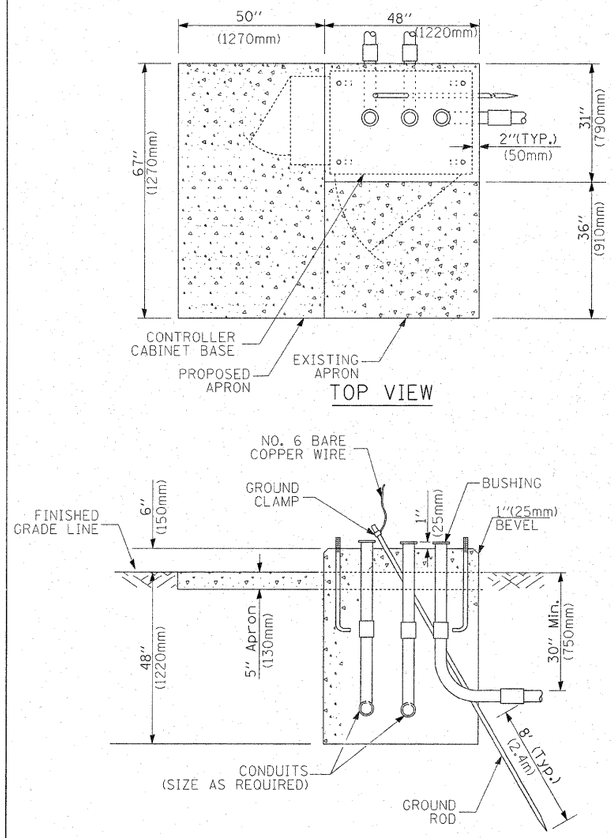

TYPE D
FOR GROUND MOUNTED
CONTROLLER CABINET
AND UPS BATTERY CABINET

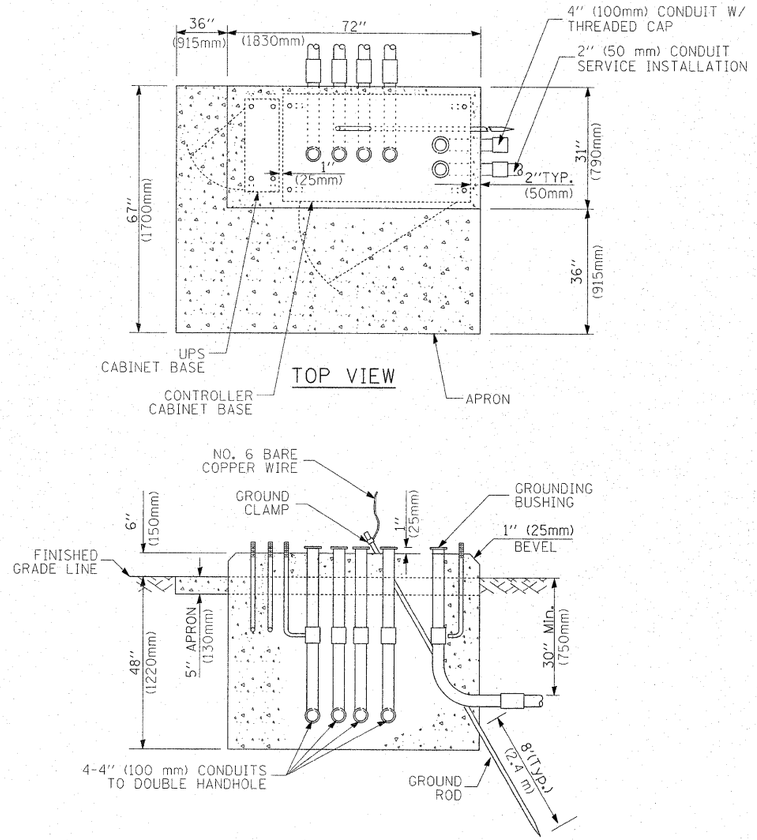

TYPE C
FOR GROUND MOUNTED
CONTROLLER CABINET
AND UPS BATTERY CABINET

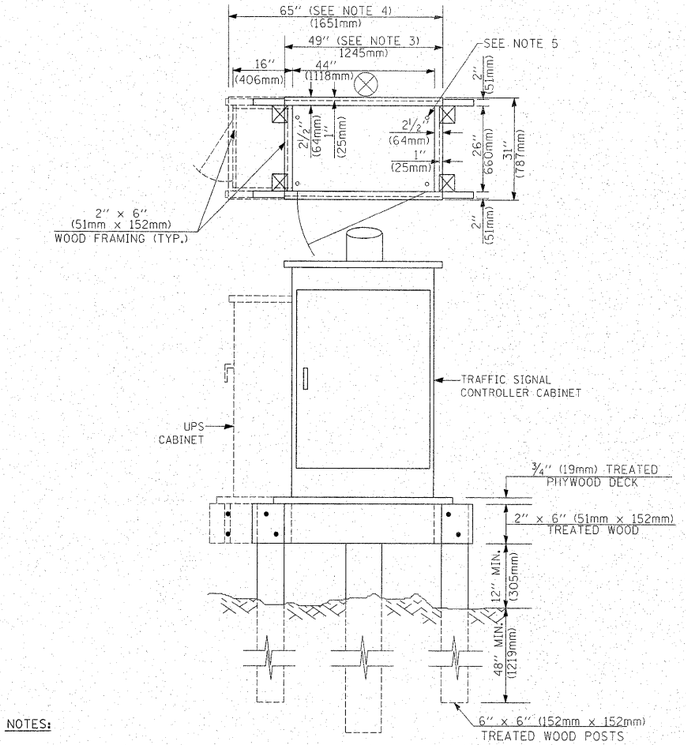

NOTES:

1. BASED ON CONTROLLER CABINET TYPE IV WITH BASE DIMENSIONS OF 26" x 44" (660mm x 1118mm). ADJUST PLATFORM SIZE TO FIT CABINET BASE DIMENSIONS BEING SUPPLIED.
2. BASED ON UNINTERRUPTIBLE POWER SUPPLY CABINET WITH BASE DIMENSIONS OF 16" x 25" (406mm x 635mm). ADJUST PLATFORM SIZE TO FIT CABINET BASE DIMENSIONS BEING SUPPLIED.
3. PLATFORM SIZE FOR CONTROLLER CABINET TYPE IV.
4. PLATFORM SIZE FOR CONTROLLER CABINET TYPE IV AND UNINTERRUPTIBLE POWER SUPPLY CABINET.
5. DRILLED HOLES THROUGH THE PLATFORM BASE TO MATCH THE CONTROLLER CABINET BOLT TEMPLATE. FASTEN THE CONTROLLER CABINET TO THE PLATFORM WITH CARRIAGE BOLTS, WASHERS AND NUTS.
6. FASTEN ALL SUPPORT WOOD FRAMING TO THE WOOD POSTS WITH 2 LAG SCREWS FOR EACH CONNECTION.

TEMPORARY SIGNAL CONTROLLER
WOOD SUPPORT PLATFORM

CABLE SLACK LENGTH	FEET	METER
HANDHOLE	6.5	2.0
DOUBLE HANDHOLE	13.0	4.0
SIGNAL POST	2.0	0.6
MAST ARM	2.0	0.6
CONTROLLER CABINET	1.5	0.5
FIBER OPTIC AT CABINET	13.0	4.0
ELECTRIC SERVICE AT (CABINET OR SERVICE LOCATION)	1.5	0.5
GROUND CABLE (SIGNAL POST, MAST ARM, CABINET)	1.5	0.5
GROUND CABLE (BETWEEN FRAME AND COVER)	5.0	1.6

CABLE SLACK

VERTICAL CABLE LENGTH	FEET	METER
MAST ARM POLE (MAST ARM MOUNTED SIGNAL HEAD) (L = MAST ARM LENGTH - DISTANCE TO SIGNAL HEAD FROM END OF ARM)	20.0+L	6.0+L
BRACKET MOUNTED (MAST ARM POLE OR SIGNAL POLE)	13.0	4.0
PEDESTRIAN PUSH BUTTON	6.0	2.0
SERVICE INSTALLATION POLE MOUNT TO SERVICE DROP	13.5	4.1
SERVICE INSTALLATION POLE MOUNT TO GROUND	13.5	4.1
SERVICE INSTALLATION GROUND MOUNT	6.0	2.0
FOUNDATION (SIGNAL POST, MAST ARM POLE, CONTROLLER CABINET, SERVICE-GROUND MOUNT)	3.0	1.0

VERTICAL CABLE LENGTH

FOUNDATION	DEPTH
TYPE A - Signal Post	4'-0" (1.2m)
TYPE C - CONTROLLER W/ UPS	4'-0" (1.2m)
TYPE D - CONTROLLER	4'-0" (1.2m)
SERVICE INSTALLATION, GROUND MOUNT, TYPE A - SQUARE	4'-0" (1.2m)

DEPTH OF FOUNDATION

Mast Arm Length	① Foundation Depth	Foundation Diameter	Spiral Diameter	Quantity of Rebars	Size of Rebars
Less than 30' (9.1 m)	10'-0" (3.0 m)	30" (750mm)	24" (600mm)	8	6(19)
Greater than or equal to 30' (9.1 m) and less than 40' (12.2 m)	13'-6" (4.1 m)	30" (750mm)	24" (600mm)	8	6(19)
	11'-0" (3.4 m)	36" (900mm)	30" (750mm)	12	7(22)
Greater than or equal to 40' (12.2 m) and less than 50' (15.2 m)	13'-0" (4.0 m)	36" (900mm)	30" (750mm)	12	7(22)
Greater than or equal to 50' (15.2 m) and up to 55' (16.8 m)	15'-0" (4.6 m)	36" (900mm)	30" (750mm)	12	7(22)
Greater than or equal to 56' (16.8 m) and less than 65' (19.8 m)	21'-0" (6.4 m)	42" (1060mm)	36" (900mm)	16	8(25)
Greater than or equal to 65' (19.8 m) and up to 75' (22.9 m)	25'-0" (7.6 m)	42" (1060mm)	36" (900mm)	16	8(25)

NOTES:

1. These foundation depths are for sites which have cohesive soils (clayey silt, sandy clay, etc.) along the length of the shaft, with an average Unconfined Compressive Strength (Qu) > 1.0 tsf (100 kpa). This strength shall be verified by boring data prior to construction or with testing by the Engineer during foundation drilling. The Bureau of Bridges & structures should be contacted for a revised design if other conditions are encountered.
2. Combination mast arm assemblies under 55 feet (16.8 m) shall use 36" (900 mm) diameter foundations.
3. Combination mast arm assemblies under 56 feet (16.8 m) through 75 feet (22.9 m) shall use 42" (1060 mm) diameter foundations.
4. For mast arm assemblies with dual arms refer to state standard 878001.

DEPTH OF MAST ARM FOUNDATIONS, TYPE E

FILE NAME = c:\pw_work\pwidot\steedpa\d0159915\DistSd.dgn	USER NAME = steedpa	DESIGNED - DAG	REVISED -
		DRAWN - BCK	REVISED -
	PLOT SCALE = 50.7684 ' / IN.	CHECKED - DAD	REVISED -
	PLOT DATE = 2/3/2011	DATE - 10-28-09	REVISED -

STATE OF ILLINOIS
DEPARTMENT OF TRANSPORTATION

DISTRICT ONE
STANDARD TRAFFIC SIGNAL DESIGN DETAILS

SCALE: NONE | SHEET NO. 5 OF 6 SHEETS | STA. TO STA.

F.A.U. RTE.	SECTION	COUNTY	TOTAL SHEETS	SHEET NO.
1566	29 R-N-1	COOK	120	104
	TS-05	CONTRACT NO. 62377		
FED. ROAD DIST. NO. 1	ILLINOIS	FED. AID PROJECT		

TRAFFIC SIGNAL LEGEND

ITEM	REMOVAL	EXISTING	PROPOSED
CONTROLLER CABINET	R		
RAILROAD CONTROL CABINET		R R	R R
COMMUNICATIONS CABINET	R C.C	E.C.C	C.C
MASTER CONTROLLER		EMC	MC
MASTER MASTER CONTROLLER		EMMC	MMC
UNINTERRUPTIBLE POWER SUPPLY	R UPS	EUPS	UPS
SERVICE INSTALLATION, (P) POLE OR (G) GROUND MOUNT	R	P	P
TELEPHONE CONNECTION (P) POLE OR (G) GROUND MOUNT	R T	P T	P T
STEEL MAST ARM ASSEMBLY AND POLE	R		
ALUMINUM MAST ARM ASSEMBLY AND POLE	R		
STEEL COMBINATION MAST ARM ASSEMBLY AND POLE WITH LUMINAIRE	R		
STEEL COMBINATION MAST ARM ASSEMBLY AND POLE WITH PTZ CAMERA	R PTZ	PTZ	PTZ
SIGNAL POST	R		
TEMPORARY WOOD POLE (CLASS 5 OR BETTER) 45 FOOT (13.7m) MINIMUM	R		
GUY WIRE	R		
SIGNAL HEAD	R		
SIGNAL HEAD CONSTRUCTION STAGES (NUMBERS INDICATE THE CONSTRUCTION STAGE)			2
SIGNAL HEAD WITH BACKPLATE	R		
SIGNAL HEAD OPTICALLY PROGRAMMED	R "P"	"P"	"P"
FLASHER INSTALLATION (S DENOTES SOLAR POWER)	R "F"	"F"	"F"
PEDESTRIAN SIGNAL HEAD	R		
PEDESTRIAN PUSHBUTTON DETECTOR	R		
ACCESSIBLE PEDESTRIAN PUSHBUTTON DETECTOR	R APS	APS	APS
ILLUMINATED SIGN "NO LEFT TURN"	R		
ILLUMINATED SIGN "NO RIGHT TURN"	R		
DETECTOR LOOP, TYPE I			
PREFORMED DETECTOR LOOP		P	P
MICROWAVE VEHICLE SENSOR	R M	M	M
VIDEO DETECTION CAMERA	R V	V	V
VIDEO DETECTION ZONE			
PAN, TILT, ZOOM CAMERA	R PTZ	PTZ	PTZ
WIRELESS DETECTOR SENSOR	R W	W	W
WIRELESS ACCESS POINT	R		

ITEM	REMOVAL	EXISTING	PROPOSED
EMERGENCY VEHICLE LIGHT DETECTOR	R		
CONFIRMATION BEACON	R		
HANDHOLE	R		
HEAVY DUTY HANDHOLE	R H	H	H
DOUBLE HANDHOLE	R		
JUNCTION BOX	R		
GALVANIZED STEEL CONDUIT IN TRENCH (T) OR PUSHED (P)			
TEMPORARY SPAN WIRE, TETHER WIRE, AND CABLE	R		
COMMON TRENCH			CT
COILABLE NONMETALLIC CONDUIT (EMPTY)			CNC
SYSTEM ITEM		S	S
INTERSECTION ITEM		I	IP
REMOVE ITEM	R		
RELOCATE ITEM	RL		
ABANDON ITEM	A		
12" (300mm) TRAFFIC SIGNAL SECTION		R	R
12" (300mm) RED WITH 8" (200mm) YELLOW AND GREEN TRAFFIC SIGNAL FACE		R Y G	
SIGNAL FACE		R Y G Y G	R Y G Y G
SIGNAL FACE WITH BACKPLATE. "P" INDICATES PROGRAMMED HEAD		R Y G Y G "P"	R Y G Y G "P"
12" (300mm) PEDESTRIAN SIGNAL HEAD WALK/DON'T WALK SYMBOL		DW W	
12" (300mm) PEDESTRIAN SIGNAL HEAD INTERNATIONAL SYMBOL, OUTLINED			
12" (300mm) PEDESTRIAN SIGNAL HEAD INTERNATIONAL SYMBOL, SOLID			
PEDESTRIAN SIGNAL HEAD, INTERNATIONAL SYMBOL, WITH COUNTDOWN TIMER		C D	C D
RADIO INTERCONNECT	R		
RADIO REPEATER	R ERR	ERR	RR
DENOTES NUMBER OF CONDUCTORS, ELECTRIC CABLE NO. 14, UNLESS NOTED OTHERWISE, ALL DETECTOR LOOP CABLE TO BE SHIELDED		5	5
GROUND CABLE IN CONDUIT NO. 6 SOLID COPPER (GREEN)		I	I

ITEM	REMOVAL	EXISTING	PROPOSED
ELECTRIC CABLE IN CONDUIT, TRACER, NO. 14 1/C, UNLESS NOTED OTHERWISE		I	I
COAXIAL CABLE		C	C
VENDOR CABLE FOR CAMERA		V	V
COPPER INTERCONNECT CABLE, NO. 18 3 PAIR TWISTED, SHIELDED		6	6
FIBER OPTIC CABLE NO. 62.5/125, MM12F		12F	
FIBER OPTIC CABLE NO. 62.5/125, MM12F SM12F		24F	24F
FIBER OPTIC CABLE NO. 62.5/125, (NUMBER OF FIBERS & TYPE TO BE NOTED ON PLANS)			
GROUND ROD AT (C) CONTROLLER, (H) HANDHOLE, (P) POST, (M) MAST ARM, OR (S) SERVICE		C	C
CONTROLLER CABINET AND FOUNDATION TO BE REMOVED	RCF		
STEEL MAST ARM POLE AND FOUNDATION TO BE REMOVED	RMF		
ALUMINUM MAST ARM POLE AND FOUNDATION TO BE REMOVED	RMF		
STEEL COMBINATION MAST ARM ASSEMBLY AND POLE WITH LUMINAIRE AND FOUNDATION TO BE REMOVED	RMF		
SIGNAL POST AND FOUNDATION TO BE REMOVED	RMF		
INTERSECTION & SAMPLING (SYSTEM) DETECTOR		IS	IS
SAMPLING (SYSTEM) DETECTOR		S	S
EXISTING INTERSECTION LOOP DETECTOR PROPOSED INTERSECTION AND SAMPLING (SYSTEM) DETECTOR		P	
EXISTING PREFORMED INTERSECTION LOOP DETECTOR PROPOSED INTERSECTION AND SAMPLING (SYSTEM) DETECTOR		PP	
PREFORMED INTERSECTION AND SAMPLING (SYSTEM) DETECTOR		PIS	PIS
PREFORMED SAMPLING (SYSTEM) DETECTOR		PS	PS

RAILROAD SYMBOLS

	EXISTING	PROPOSED
RAILROAD CONTROL CABINET	R R	R R
RAILROAD CANTILEVER MAST ARM		
FLASHING SIGNAL		
CROSSING GATE		
CROSSBUCK		

FILE NAME = c:\pw_work\pwidot\steedpa\d0159915\DistStd.dgn	USER NAME = steedpa	DESIGNED - DAG/BCK	REVISED -
		DRAWN - BCK	REVISED -
	PLOT SCALE = 50.7684 ' / IN.	CHECKED - DAD	REVISED -
	PLOT DATE = 2/3/2011	DATE - 10-28-09	REVISED -

STATE OF ILLINOIS
DEPARTMENT OF TRANSPORTATION

DISTRICT ONE
STANDARD TRAFFIC SIGNAL DESIGN DETAILS

SCALE: NONE | SHEET NO. 6 OF 6 SHEETS | STA. | TO STA.

F.A.U. RTE.	SECTION	COUNTY	TOTAL SHEETS	SHEET NO.
1566	29 R-N-1	COOK	120	105

TS-05
CONTRACT NO. 62377
FED. ROAD DIST. NO. 1 | ILLINOIS | FED. AID PROJECT

EMERGENCY VEHICLE PREEMPTION SEQUENCE OF OPERATION

CHANGE FROM NORMAL SEQUENCE OF OPERATION INTERVAL NUMBER	1	5		5			8		8			11	11			14	18			18		22			22		26			26	PREEMPTOR NUMBER 3	PREEMPTOR NUMBER 4	CLEAR TO NORMAL SEQUENCE
EMERGENCY VEHICLE PREEMPTION SEQUENCE OF OPERATION INTERVAL NUMBER	1A	1B	1C	1D	1E	1F	1G	1H	1J	1K	1L	1M	1N	1P	1Q	1R	1S	1T	1U	1V	1W	1X	1Y	1Z	1AA	1BB	1CC	1DD	1EE	1FF	2	3	
CHANGE TO EMERGENCY VEHICLE PREEMPTION SEQUENCE OF OPERATION INTERVAL NUMBER	2 OR 3	1C	2	1E	1F	3	1H	2	1K	1L	3	2	1P	1Q	3	2 OR 3	1T	1U	2	1W	3	1Y	1Z	2	1BB	3	1DD	1EE	2	3			◊
MAIN STREET E/B END MAST ARM AND FAR LEFT SIGNALS	R ◄Y	R	R	R	R	R	G ◄G	G ◄Y	G ◄G	Y	R	G	G	Y	R	R	R	R	R	R	R	R	R	R	R	R	R	R	R	R	G	R	◊
MAIN STREET E/B FAR RIGHT SIGNAL	R	R	R	R	R	R	G	G	G	Y	R	G	G	Y	R	R	R	R	R	R	R	R	R	R	R	R	R	R	R	R	G	R	◊
MAIN STREET W/B END MAST ARM AND FAR LEFT SIGNALS	R ◄Y	G ◄G	G ◄Y	G ◄G	Y	R	R	R	R	R	R	G	G	Y	R	R	R	R	R	R	R	R	R	R	R	R	R	R	R	R	G	R	◊
MAIN STREET W/B FAR RIGHT SIGNAL	R	G	G	G	Y	R	R	R	R	R	R	G	G	Y	R	R	R	R	R	R	R	R	R	R	R	R	R	R	R	R	G	R	◊
CROSS STREET S/B END MAST ARM AND FAR LEFT SIGNALS	R	R	R	R	R	R	R	R	R	R	R	R	R	R	R	R ◄Y	R	R	R	R	R	G ◄G	Y	R	G ◄G	G ◄Y	G	Y	R	G	R	G	◊
CROSS STREET S/B FAR RIGHT SIGNAL	R	R	R	R	R	R	R	R	R	R	R	R	R	R	R	R	R	R	R	R	R	G	Y	R	G	G	G	Y	R	G	R	G	◊
CROSS STREET N/B END MAST ARM AND FAR LEFT SIGNALS	R	R	R	R	R	R	R	R	R	R	R	R	R	R	R	R ◄Y	G ◄G	Y	R	G ◄G	G ◄Y	R	R	R	R	R	G	Y	R	G	R	G	◊
CROSS STREET N/B FAR RIGHT SIGNAL	R	R	R	R	R	R	R	R	R	R	R	R	R	R	R	R	G	Y	R	G	G	R	R	R	R	R	G	Y	R	G	R	G	◊
PEDESTRIAN SIGNALS CROSSING CROSS STREET ON NORTHSIDE OF MAIN STREET	H	FH	H	FH	H	H	H	H	H	H	H	FH	FH	H	H	H	H	H	H	H	H	H	H	H	H	H	H	H	H	H	H	H	◊
PEDESTRIAN SIGNALS CROSSING CROSS STREET ON SOUTHSIDE OF MAIN STREET	H	H	H	H	H	H	FH	H	FH	H	H	FH	FH	H	H	H	H	H	H	H	H	H	H	H	H	H	H	H	H	H	H	H	◊
PEDESTRIAN SIGNALS CROSSING MAIN STREET ON EASTSIDE OF CROSS STREET	H	H	H	H	H	H	H	H	H	H	H	H	H	H	H	H	FH	H	H	FH	H	H	H	H	H	H	FH	H	H	FH	H	H	◊
PEDESTRIAN SIGNALS CROSSING MAIN STREET ON WESTSIDE OF CROSS STREET	H	H	H	H	H	H	H	H	H	H	H	H	H	H	H	H	H	H	H	H	H	FH	H	H	FH	H	FH	H	H	FH	H	H	◊

◊ EMERGENCY VEHICLE SEQUENCE SHALL PROVIDE THE PROPER CLEARANCE INTERVAL TO RESUME THE NORMAL SEQUENCE OF OPERATION OR PROPER CLEARANCE INTERVAL TO DISPLAY A DIFFERENT EMERGENCY INTERVAL AFTER EMERGENCY VEHICLE 2 OR 3 IS TERMINATED.

PROPOSED SEQUENCE OF OPERATION

MOVEMENT	5 → 1				6 ← 1			5 → 2			2 → 6				7 → 3				3 8					4 7					4 8				FLASH
PHASE	1 + 5				1 + 6			2 + 5			2 + 6				3 + 7				3 + 8					4 + 7					4 + 8				
INTERVAL	1	2	3	4	5	6	7	8	9	10	11	12	13A	13B	14	15	16	17	18	19	20A	20B	21	22	23	24A	24B	25	26	27	28A	28B	
CHANGE TO		1+6	2+5	2+6	ϑ	ϑ	2+6	ϑ	ϑ	2+6			3+7 3+8 4+7 4+8			1+5 1+6 2+5 2+6 4+8	3+8	4+7	ϑ	ϑ	1+5 1+6 2+5 2+6		4+8	ϑ	ϑ	1+5 1+6 2+5 2+6		4+8			1+5 1+6 2+5 2+6		
MAIN STREET E/B END MAST ARM AND FAR LEFT SIGNALS	R ◄G	R ◄Y	R ◄G	R ◄Y	R	R	R	G ◄G	G ◄G	G ◄Y	G	G	Y	R	R	R	R	R	R	R	R	R	R	R	R	R	R	R	R	R	R	R	R
MAIN STREET E/B FAR RIGHT SIGNAL	R	R	R	R	R	R	R	G	G	G	G	G	Y	R	R	R	R	R	R	R	R	R	R	R	R	R	R	R	R	R	R	R	R
MAIN STREET W/B END MAST ARM AND FAR LEFT SIGNALS	R ◄G	R ◄G	R ◄Y	R ◄Y	G ◄G	G ◄G	G ◄Y	R	R	R	G	G	Y	R	R	R	R	R	R	R	R	R	R	R	R	R	R	R	R	R	R	R	R
MAIN STREET W/B FAR RIGHT SIGNAL	R	R	R	R	G	G	G	R	R	R	G	G	Y	R	R	R	R	R	R	R	R	R	R	R	R	R	R	R	R	R	R	R	R
CROSS STREET S/B END MAST ARM AND FAR LEFT SIGNALS	R	R	R	R	R	R	R	R	R	R	R	R	R	R	R ◄G	R ◄Y	R ◄Y	R ◄G	R	R	R	R	R	G ◄G	G ◄G	Y	R	G ◄Y	G	G	Y	R	R
CROSS STREET S/B FAR RIGHT SIGNAL	R	R	R	R	R	R	R	R	R	R	R	R	R	R	R	R	R	R	R	R	R	R	R	G	G	Y	R	G	G	G	Y	R	R
CROSS STREET N/B END MAST ARM AND FAR LEFT SIGNALS	R	R	R	R	R	R	R	R	R	R	R	R	R	R	R ◄G	R ◄Y	R ◄G	R ◄Y	G ◄G	G ◄G	Y	R	G ◄Y	R	R	R	R	R	G	G	Y	R	R
CROSS STREET N/B FAR RIGHT SIGNAL	R	R	R	R	R	R	R	R	R	R	R	R	R	R	R	R	R	R	G	G	Y	R	G	R	R	R	R	R	G	G	Y	R	R
PEDESTRIAN SIGNALS CROSSING CROSS STREET ON NORTHSIDE OF MAIN STREET	H	H	H	H	•P	••FH	H	H	H	H	•P	••FH	H	H	H	H	H	H	H	H	H	H	H	H	H	H	H	H	H	H	H	H	D
PEDESTRIAN SIGNALS CROSSING CROSS STREET ON SOUTHSIDE OF MAIN STREET	H	H	H	H	H	H	H	•P	••FH	H	•P	••FH	H	H	H	H	H	H	H	H	H	H	H	H	H	H	H	H	H	H	H	H	A
PEDESTRIAN SIGNALS CROSSING MAIN STREET ON EASTSIDE OF CROSS STREET	H	H	H	H	H	H	H	H	H	H	H	H	H	H	H	H	H	H	•P	••FH	H	H	H	H	H	H	H	H	•P	••FH	H	H	R
PEDESTRIAN SIGNALS CROSSING MAIN STREET ON WESTSIDE OF CROSS STREET	H	H	H	H	H	H	H	H	H	H	H	H	H	H	H	H	H	H	H	H	H	H	H	•P	••FH	H	H	H	•P	••FH	H	H	K

- • TO APPEAR ONLY UPON PUSHBUTTON ACTIVATION
- •• FLASHING "✋" IS TO TERMINATE AT THE COMPLETION OF THE PEDESTRIAN INTERVAL CLEARANCE.

ϑ THIS "🚶" OR FLASHING "✋" INTERVAL MAY FINISH TIMIMG IN THE BIDIRECTIONAL STRAIGHT THROUGH MOVEMENT IF THE LEFT ARROW TIME IS NOT SUFFICIENT TO COMPLETE "🚶" OR FLASHING "✋" INTERVALS. "🚶" AND FLASHING "✋" TIMINGS TO BE SET ONLY ON PHASES WHERE "🚶" AND FLASHING "✋" ARE INDICATED IN THE SEQUENCE OF OPERATION.

P = ILLUMINATED PERSON = WALK
FH = ILLUMINATED FLASHING HAND = FLASHING DON'T WALK
H = ILLUMINATED SOLID HAND = DON'T WALK

PHASE 2+6 SHALL BE PLACED ON RECALL.

NLT = "NO LEFT TURN" OR

NRT = "NO RIGHT TURN" OR

PROPOSED RAILROAD PREEMPTION SEQUENCE OF OPERATION

														PREEMPTOR NUMBER 3		PREEMPTOR NUMBER 4		PREEMPTOR NUMBER 2				
CHANGE FROM NORMAL SEQUENCE OF OPERATION INTERVAL NUMBER	1	5		8		11		14	18		22	26										
CHANGE FROM EMERGENCY VEHICLE PREEMPTION SEQUENCE OF OPERATION INTERVAL NUMBER														2		3						
RAILROAD PREEMPTION SEQUENCE OF OPERATION INTERVAL NUMBER	1A	1B	1C	1D	1E	1F	1G	1H	1J	1K	1L	1M	1N	1P	1Q	1R	1S	2	3	4	5	CLEAR TO NORMAL SEQUENCE
CHANGE TO RAILROAD PREEMPTION SEQUENCE OF OPERATION INTERVAL NUMBER	2	1C	2	1E	2	1G	2	2	1K	2	2	1N	2	1Q	2	1S	2	3	4	5		
MAIN STREET E/B END MAST ARM AND FAR LEFT SIGNALS	R ◄Y	Y	R	R	R	Y	R	R	R	R	R	R	R	Y	R	R	R	R	R	R	R	△
MAIN STREET E/B FAR RIGHT SIGNAL	R	Y	R	R	R	Y	R	R	R	R	R	R	R	Y	R	R	R	R	R	R	R	△
MAIN STREET W/B END MAST ARM AND FAR LEFT SIGNALS	R ◄Y	R	R	Y	R	Y	R	R	R	R	R	R	R	Y	R	R	R	R	R	R	G ◄G	△
MAIN STREET W/B FAR RIGHT SIGNAL	R	R	R	Y	R	Y	R	R	R	R	R	R	R	Y	R	R	R	R	R	R	G	△
CROSS STREET S/B END MAST ARM AND FAR LEFT SIGNALS	R	R	R	R	R	R	R	R ◄G	R	R	G ◄G	G	G	R	R	G	G	G ◄G	Y	R	R	△
CROSS STREET S/B FAR RIGHT SIGNAL	R	R	R	R	R	R	R	R	R	R	G	G	G	R	R	G	G	G	Y	R	R	△
CROSS STREET N/B END MAST ARM AND FAR LEFT SIGNALS	R	R	R	R	R	R	R	R ◄Y	Y	R	R	Y	R	R	R	Y	R	R	R	R	R	△
CROSS STREET N/B FAR RIGHT SIGNAL	R	R	R	R	R	R	R	R	Y	R	R	Y	R	R	R	Y	R	R	R	R	R	△
PEDESTRIAN SIGNALS CROSSING CROSS STREET ON NORTHSIDE OF MAIN STREET	H	FH	H	H	H	FH	H	H	H	H	H	H	H	H	H	H	H	H	H	H	H	△
PEDESTRIAN SIGNALS CROSSING CROSS STREET ON SOUTHSIDE OF MAIN STREET	H	H	H	FH	H	FH	H	H	H	H	H	H	H	H	H	H	H	H	H	H	H	△
PEDESTRIAN SIGNALS CROSSING MAIN STREET ON EASTSIDE OF CROSS STREET	H	H	H	H	H	H	H	H	FH	H	H	FH	H	H	H	H	H	H	H	H	H	△
PEDESTRIAN SIGNALS CROSSING MAIN STREET ON WESTSIDE OF CROSS STREET	H	H	H	H	H	H	H	H	H	H	FH	FH	H	H	H	H	H	H	H	H	H	△
INTERNALLY ILLUMINATED NRT SIGNS	NRT	NRT	NRT	NRT	NRT	NRT	NRT	NRT	NRT	NRT	NRT	NRT	NRT	NRT	NRT	NRT	NRT	NRT	NRT	NRT	NRT	△
INTERNALLY ILLUMINATED NLT SIGNS	NLT	NLT	NLT	NLT	NLT	NLT	NLT	NLT	NLT	NLT	NLT	NLT	NLT	NLT	NLT	NLT	NLT	NLT	NLT	NLT	NLT	△
																					HOLD	

△ RAILROAD PREEMPTION SEQUENCE SHALL PROVIDE THE PROPER CLEARANCE INTERVAL TO RESUME THE NORMAL SEQUENCE OF OPERATION OR PROPER CLEARANCE INTERVAL TO DISPLAY AN EMERGENCY VEHICLE INTERVAL (IF APPLICABLE) AFTER RAILROAD PREEMPTION INTERVAL 5 IS TERMINATED.

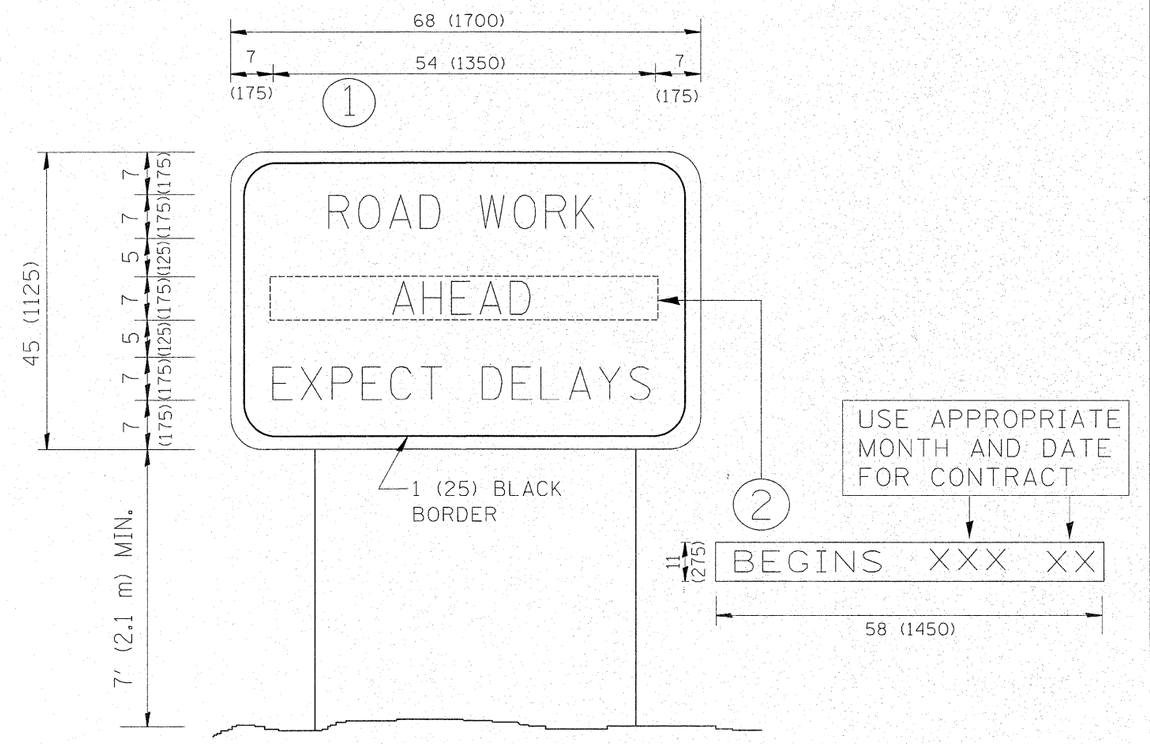

NOTES:

1. USE BLACK LETTERING ON ORANGE BACKGROUND.
2. ERECT SIGNS IN ADVANCE OF THE LOCATION FOR THE "ROAD CONSTRUCTION AHEAD" SIGN AT LOCATIONS AS DIRECTED BY THE ENGINEER.
3. ERECT SIGN 1 WITH INSTALLED PANEL 2 ONE WEEK PRIOR TO THE START OF CONSTRUCTION.
4. REMOVE PANEL 2 SOON AFTER THE START OF CONSTRUCTION.
5. SEE SPECIAL PROVISION FOR "TEMPORARY INFORMATION SIGNING" FOR ADDITIONAL INFORMATION.
6. ONE SIGN ASSEMBLY EQUALS 25.70 SQ. FT. (2.3 SQ. M.)
7. SHALL BE PAID FOR AS TEMPORARY INFORMATION SIGNING.

ALL DIMENSIONS ARE IN INCHES (MILLIMETERS) UNLESS OTHERWISE SHOWN.

FILE NAME = c:\pw_work\pwidot\steedpa\d0159915\DistStd.dgn	USER NAME = steedpa	DESIGNED -	REVISED - R. MIRS 09-15-97	STATE OF ILLINOIS DEPARTMENT OF TRANSPORTATION	ARTERIAL ROAD INFORMATION SIGN			F.A.U. RTE.	SECTION	COUNTY	TOTAL SHEETS / SHEET NO.
		DRAWN -	REVISED - R. MIRS 12-11-97					1566	29 R-N-1	COOK	120 / 108
	PLOT SCALE = 50.7684 ' / IN.	CHECKED -	REVISED - T. RAMMACHER 02-02-99						TC-22	CONTRACT NO. 62377	
	PLOT DATE = 2/3/2011	DATE -	REVISED - C. JUCIUS 01-31-07		SCALE: NONE	SHEET NO. 1 OF 1 SHEETS	STA. TO STA.		FED. ROAD DIST. NO. 1	ILLINOIS	FED. AID PROJECT

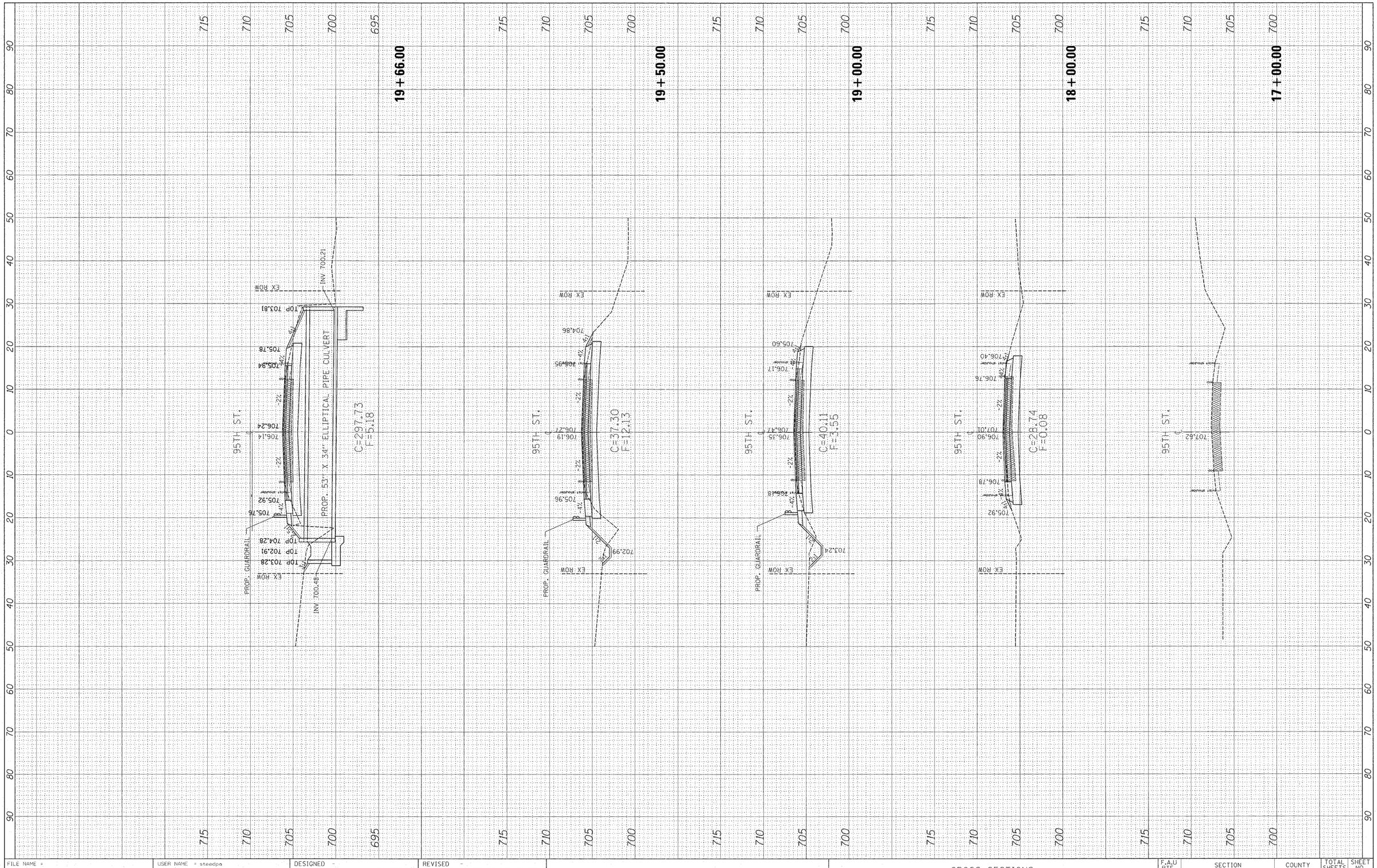

FINAL SURVEY		BY	DATE
NOTE BOOK	SURVEYED		
	PLOTTED		
	TEMPLATE		
	AREAS		
NO.	AREAS CHECKED		

ORIGINAL SURVEY		BY	DATE
NOTE BOOK	SURVEYED		
	PLOTTED		
	TEMPLATE		
	AREAS		
NO.	AREAS CHECKED		

FILE NAME = c:\pw_work\pwidot\steedpa\d0159915\P144499-sht-ssht-95th.dgn	USER NAME = steedpa	DESIGNED -	REVISED -
		DRAWN -	REVISED -
	PLOT SCALE = 10.0000 ' / in.	CHECKED -	REVISED -
	PLOT DATE = 12/7/2011	DATE -	REVISED -

STATE OF ILLINOIS
DEPARTMENT OF TRANSPORTATION

CROSS SECTIONS
95TH STREET @ 104TH AVENUE/ FLAVIN ROAD

SCALE: | SHEET NO. OF SHEETS | STA. 17+00.00 TO STA. 19+66.00

F.A.U RTE.	SECTION	COUNTY	TOTAL SHEETS	SHEET NO.
1566	29 R-N-1	COOK	120	109
		CONTRACT NO. 62377		
		ILLINOIS FED. AID PROJECT		

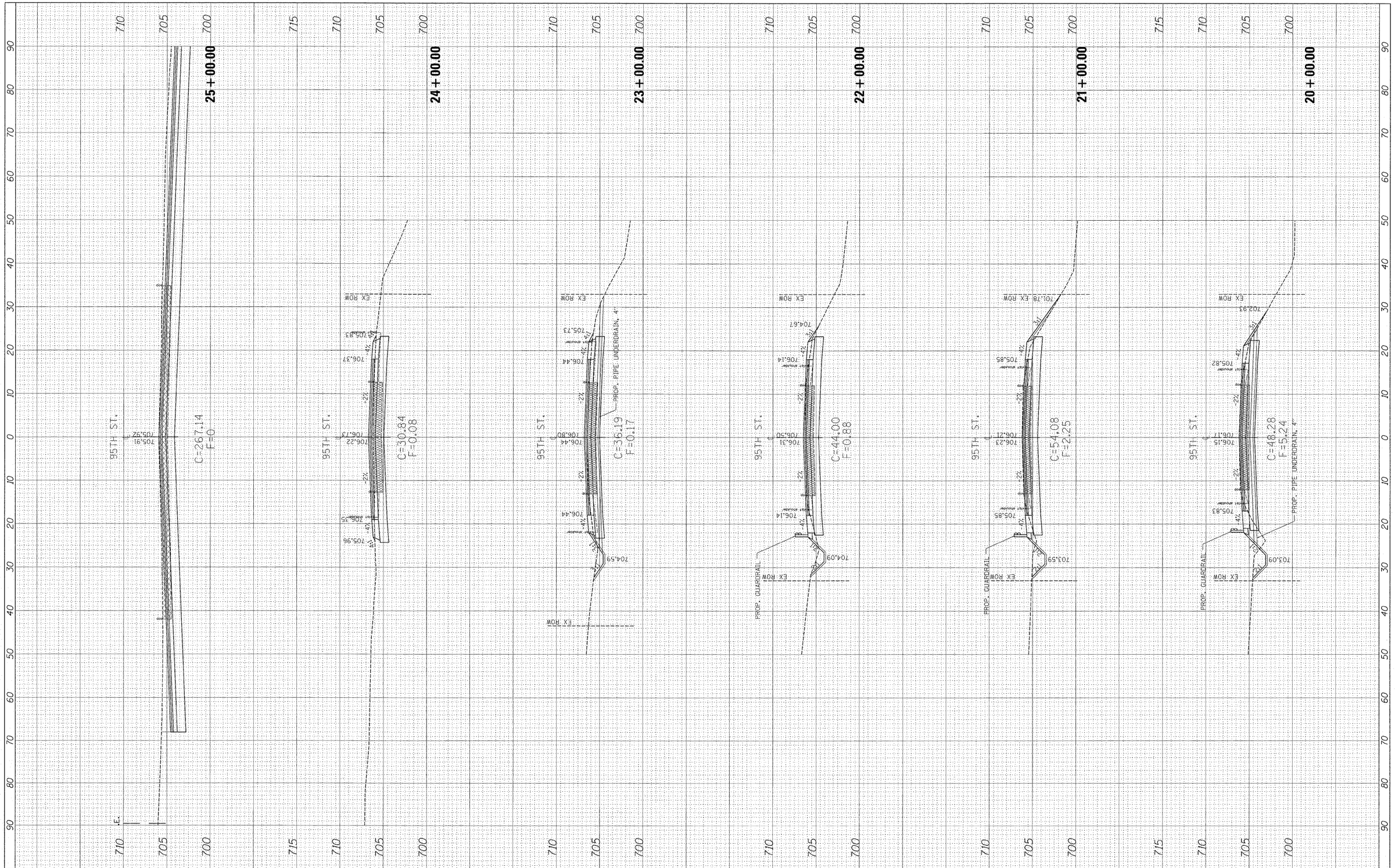

FINAL SURVEY	BY	DATE
SURVEYED		
PLOTTED		
NOTE BOOK: TEMPLATE		
AREAS		
NO. AREAS CHECKED		

ORIGINAL SURVEY	BY	DATE
SURVEYED		
PLOTTED		
NOTE BOOK TEMPLATE		
AREAS		
NO. AREAS CHECKED		

FILE NAME = c:\pw_work\pwidot\steedpa\d0159915\P144499-sht-xsht-95th.dgn	USER NAME = steedpa	DESIGNED -	REVISED -
		DRAWN -	REVISED -
	PLOT SCALE = 10.0000 ' / in.	CHECKED -	REVISED -
	PLOT DATE = 12/7/2011	DATE -	REVISED -

STATE OF ILLINOIS
DEPARTMENT OF TRANSPORTATION

CROSS SECTIONS
95TH STREET @ 104TH AVENUE/ FLAVIN ROAD

SCALE: | SHEET NO. OF SHEETS | STA. 20+00.00 TO STA. 25+00.00

F.A.U RTE.	SECTION	COUNTY	TOTAL SHEETS	SHEET NO.
1566	29 R-N-1	COOK	120	110

CONTRACT NO. 62377

ILLINOIS FED. AID PROJECT

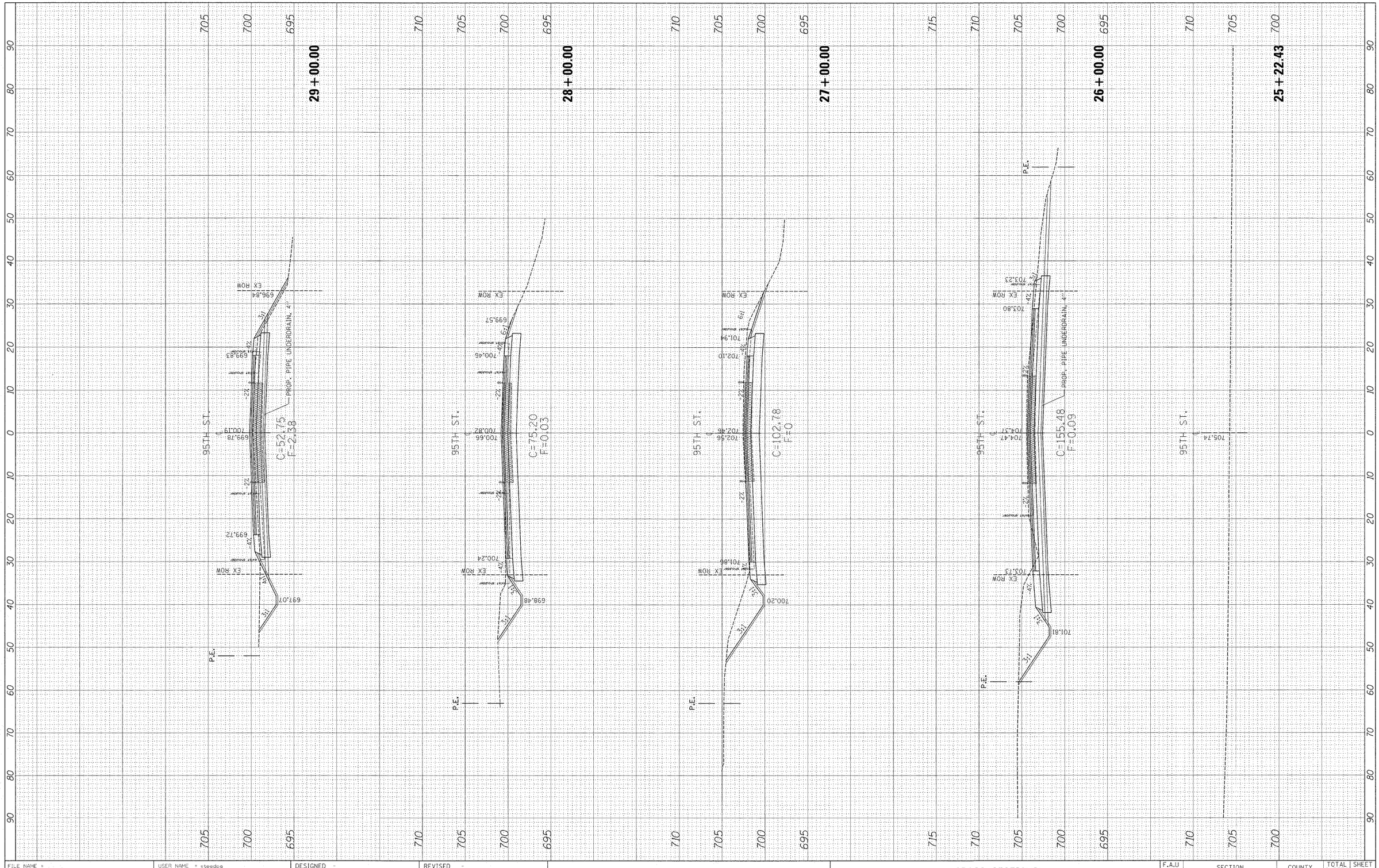

FILE NAME = c:\pw_work\pw:dot\steedpa\d0159915\P144499-sht-xsht-95th.dgn	USER NAME = steedpa	DESIGNED -	REVISED -
		DRAWN -	REVISED -
	PLOT SCALE = 10.0000 ' / in.	CHECKED -	REVISED -
	PLOT DATE = 12/7/2011	DATE -	REVISED -

STATE OF ILLINOIS
DEPARTMENT OF TRANSPORTATION

CROSS SECTIONS
95TH STREET @ 104TH AVENUE/ FLAVIN ROAD

SCALE: | SHEET NO. OF SHEETS | STA. 25+22.43 TO STA. 29+00.00

F.A.U RTE.	SECTION	COUNTY	TOTAL SHEETS	SHEET NO.
1566	29 R-N-1	COOK	120	111

CONTRACT NO. 62377

ILLINOIS FED. AID PROJECT

FINAL SURVEY	BY	DATE
SURVEYED		
PLOTTED		
TEMPLATE		
AREAS		
AREAS CHECKED		
NOTE BOOK		
NO.		

ORIGINAL SURVEY	BY	DATE
SURVEYED		
PLOTTED		
TEMPLATE		
AREAS		
AREAS CHECKED		
NOTE BOOK		
NO.		

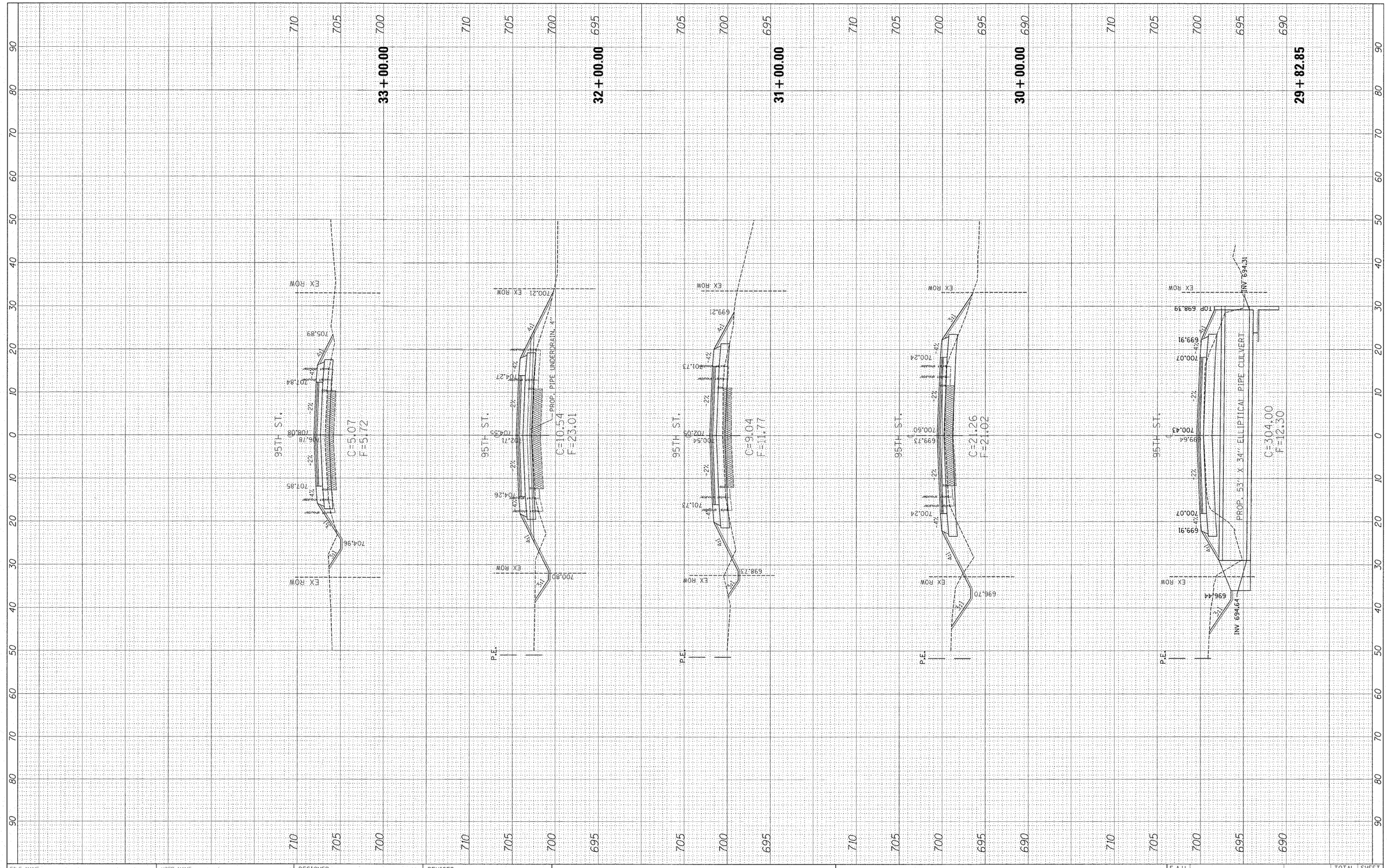

FINAL SURVEY		BY	DATE
NOTE BOOK	SURVEYED		
	PLOTTED		
	TEMPLATE		
	AREAS		
NO.	AREAS CHECKED		

ORIGINAL SURVEY		BY	DATE
NOTE BOOK	SURVEYED		
	PLOTTED		
	TEMPLATE		
	AREAS		
NO.	AREAS CHECKED		

FILE NAME = c:\pw_work\pwidot\steedpa\d0159915\P144499-sht-kssht-95th.dgn	USER NAME = steedpa	DESIGNED -	REVISED -
		DRAWN -	REVISED -
	PLOT SCALE = 10.0000 ' / in.	CHECKED -	REVISED -
	PLOT DATE = 12/7/2011	DATE -	REVISED -

STATE OF ILLINOIS
DEPARTMENT OF TRANSPORTATION

CROSS SECTIONS
95TH STREET @ 104TH AVENUE/ FLAVIN ROAD

SCALE: | SHEET NO. OF SHEETS | STA. 29+82.85 TO STA. 33+00.00

F.A.U RTE.	SECTION	COUNTY	TOTAL SHEETS	SHEET NO.
1566	29 R-N-1	COOK	120	112

CONTRACT NO. 62377

ILLINOIS FED. AID PROJECT

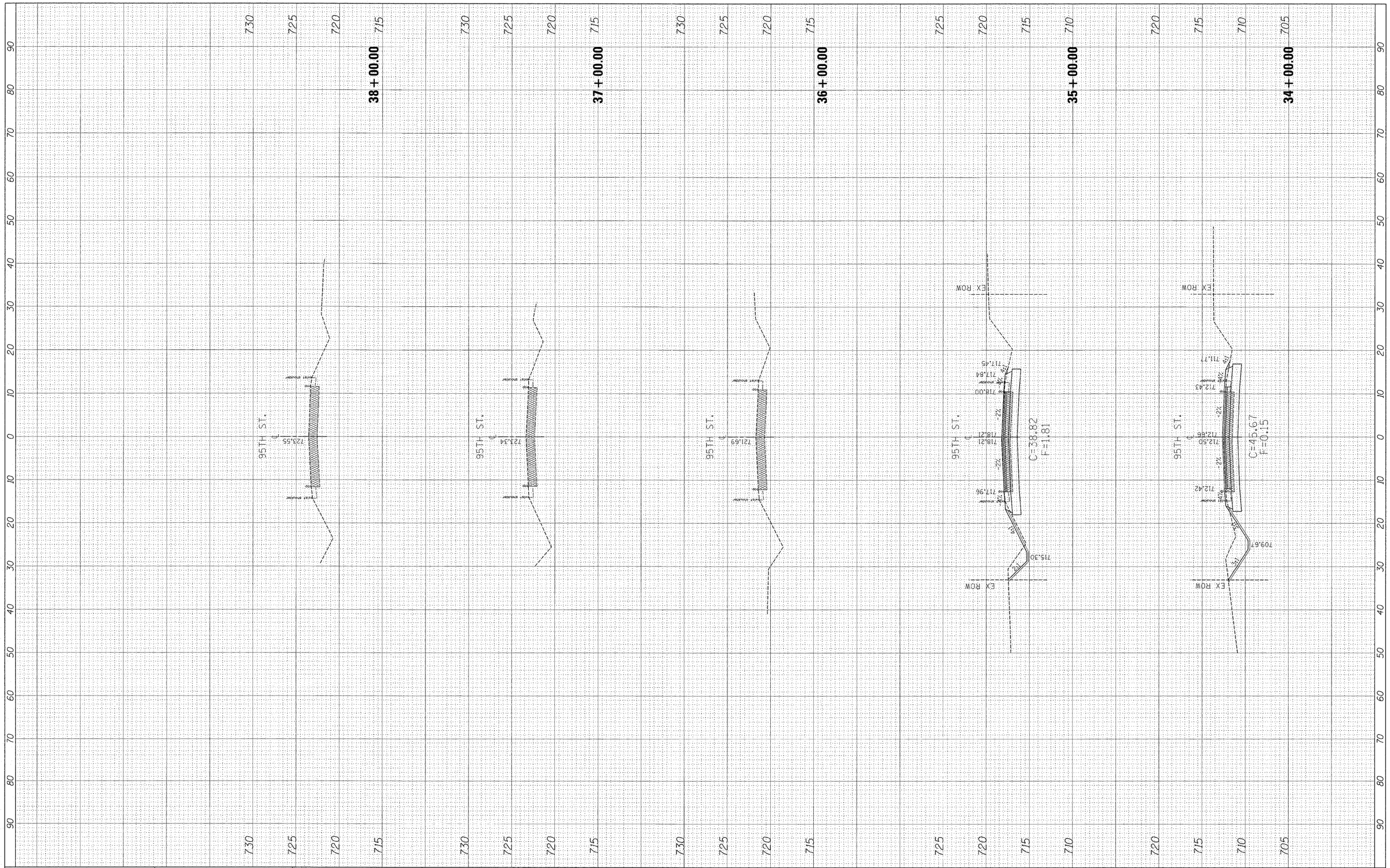

FINAL SURVEY	SURVEYED	BY	DATE
	PLOTTED		
NOTE BOOK	TEMPLATE		
	AREAS		
NO.	AREAS CHECKED		

ORIGINAL SURVEY	SURVEYED	BY	DATE
	PLOTTED		
NOTE BOOK	TEMPLATE		
	AREAS		
NO.	AREAS CHECKED		

FILE NAME = c:\pw_work\pwidot\steadpa\d0159915\P144499-sht-xssht-95th.dgn	USER NAME = steadpa	DESIGNED -	REVISED -
		DRAWN -	REVISED -
	PLOT SCALE = 10.0000 ' / in.	CHECKED -	REVISED -
	PLOT DATE = 12/7/2011	DATE -	REVISED -

STATE OF ILLINOIS
DEPARTMENT OF TRANSPORTATION

CROSS SECTIONS
95TH STREET @ 104TH AVENUE/ FLAVIN ROAD

SCALE: | SHEET NO. OF SHEETS | STA. 34+00.00 TO STA. 38+00.00

F.A.U RTE.	SECTION	COUNTY	TOTAL SHEETS	SHEET NO.
1566	29 R-N-1	COOK	120	113

CONTRACT NO. 62377

ILLINOIS FED. AID PROJECT

PLOT DATE = 12/7/2011
FILE NAME = c:\pw_work\pwidot\steedpa\d0159910\P144458-sht-104th.dgn
PLOT SCALE = 10.5882 ' / in.
USER NAME = steedpa

ORIGINAL SURVEY		BY	DATE
	SURVEYED		
	PLOTTED		
	AREAS		
NO.	AREAS CHECKED		

FINAL SURVEY		BY	DATE
	SURVEYED		
NOTE BOOK	PLOTTED		
	TEMPLATE		
	AREAS		
NO.	AREAS CHECKED		

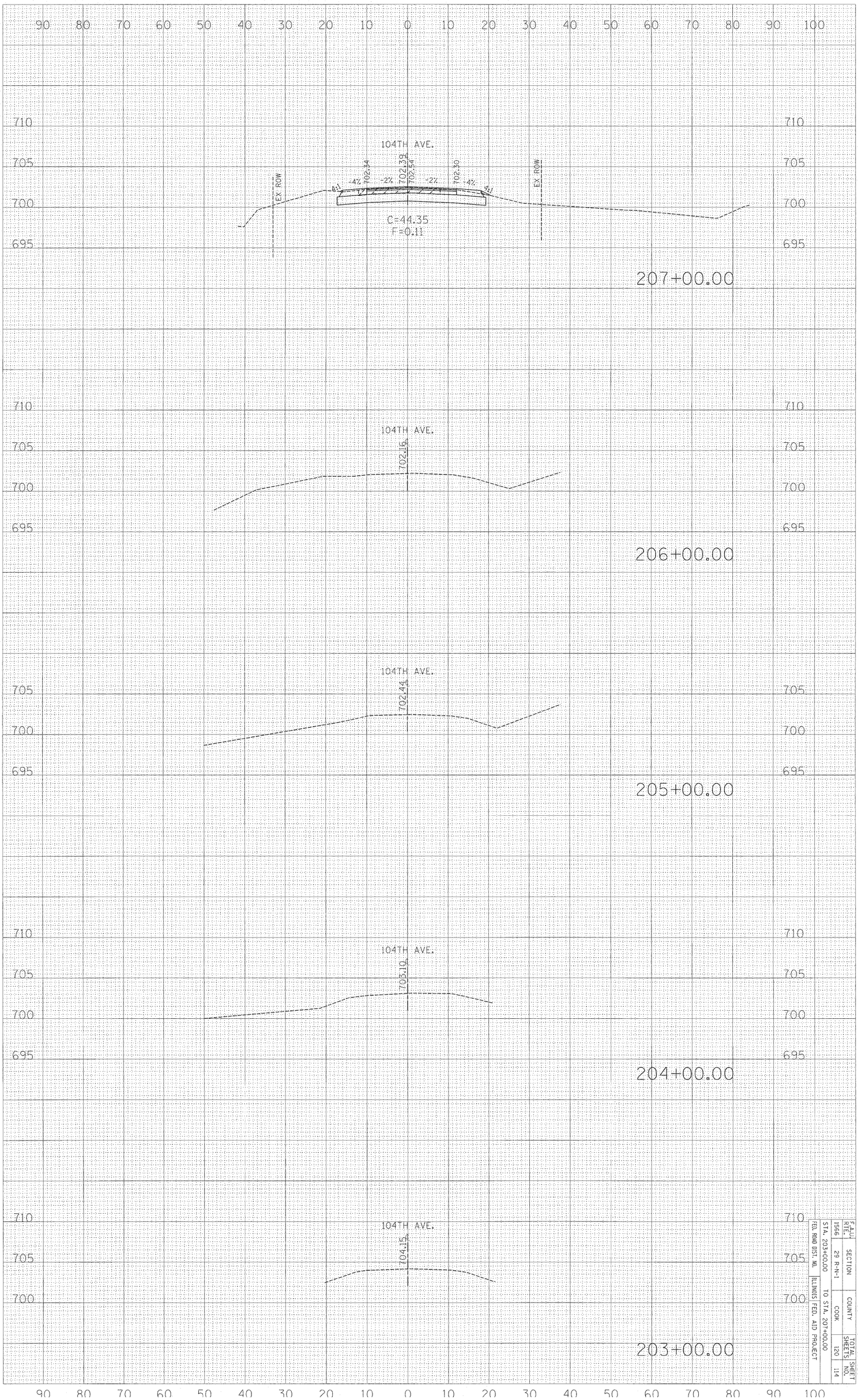

CONTRACT NO. 62377

F.A.U. RTE.	SECTION	COUNTY	TOTAL SHEETS	SHEET NO.
1566	29 R-N-1	COOK	120	114

STA. 203+00.00 TO STA. 207+00.00

FED. ROAD DIST. NO. ILLINOIS FED. AID PROJECT

PLOT DATE = 12/7/2011
FILE NAME = c:\pw_work\pwidot\steedpa\d0159910\PI4449R-sht-104th.dgn
PLOT SCALE = 10.5882 ' / in.
USER NAME = steedpa

ORIGINAL SURVEY		BY	DATE
	SURVEYED		
	PLOTTED		
	TEMPLATE		
	AREAS		
NO.	AREAS CHECKED		

FINAL SURVEY		BY	DATE
	SURVEYED		
	PLOTTED		
NOTE BOOK	TEMPLATE		
	AREAS		
NO.	AREAS CHECKED		

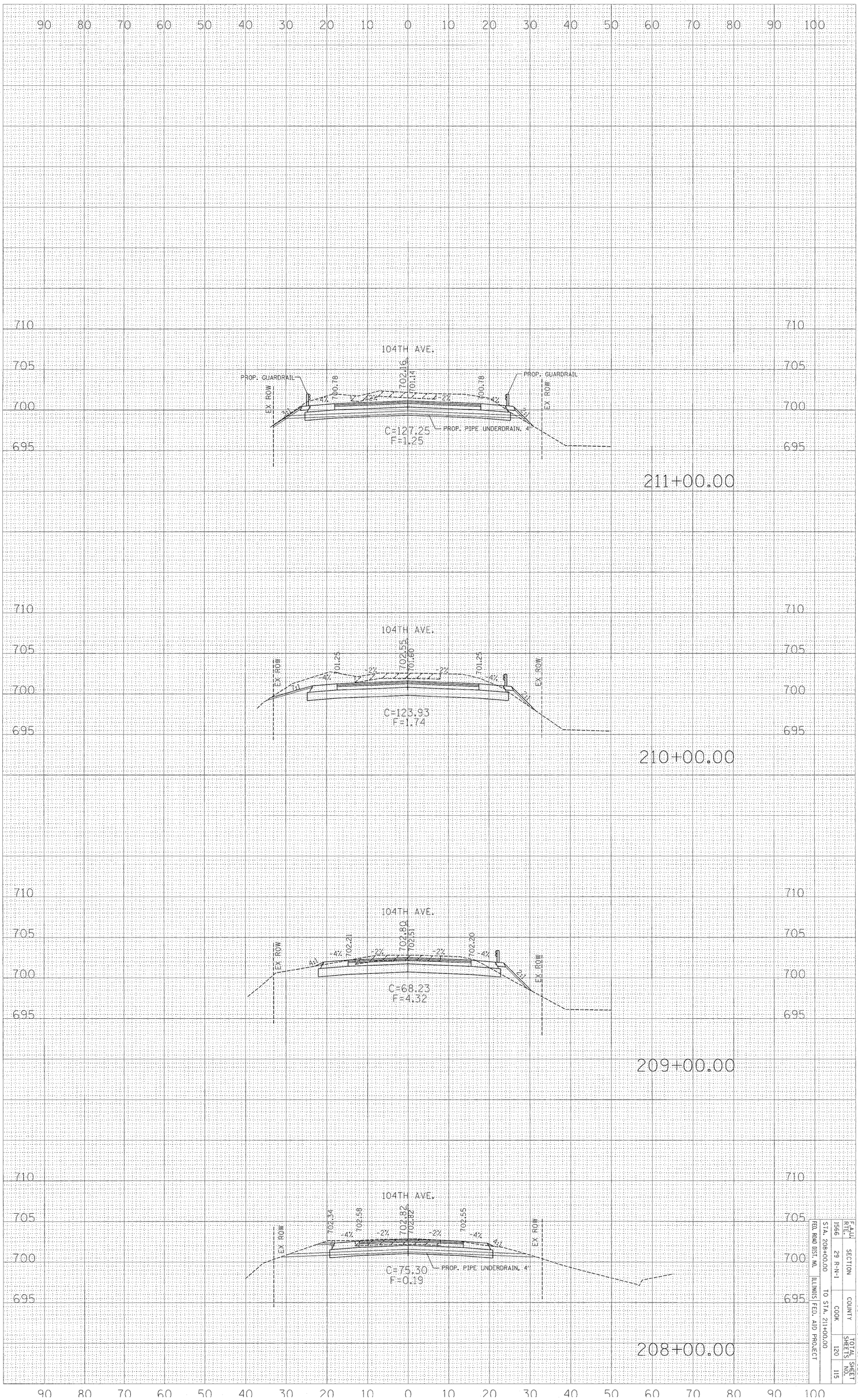

CONTRACT NO. 62377

F.A.U. RTE.	SECTION	COUNTY	TOTAL SHEETS	SHEET NO.
1566	29 R-N-1	COOK	120	115

STA. 208+00.00 TO STA. 211+00.00
FED. ROAD DIST. NO. ILLINOIS FED. AID PROJECT

PLOT DATE = 12/7/2011
FILE NAME = c:\pw_work\pwidot\steedpa\d0159916\d144499-sht-104th.dgn
PLOT SCALE = 10.5882 ' / in.
USER NAME = steedpa

ORIGINAL SURVEY		BY	DATE
	SURVEYED		
	PLOTTED		
	AREAS		
NO.	AREAS CHECKED		

FINAL SURVEY		BY	DATE
	SURVEYED		
	PLOTTED		
NOTE BOOK	TEMPLATE		
	AREAS		
NO.	AREAS CHECKED		

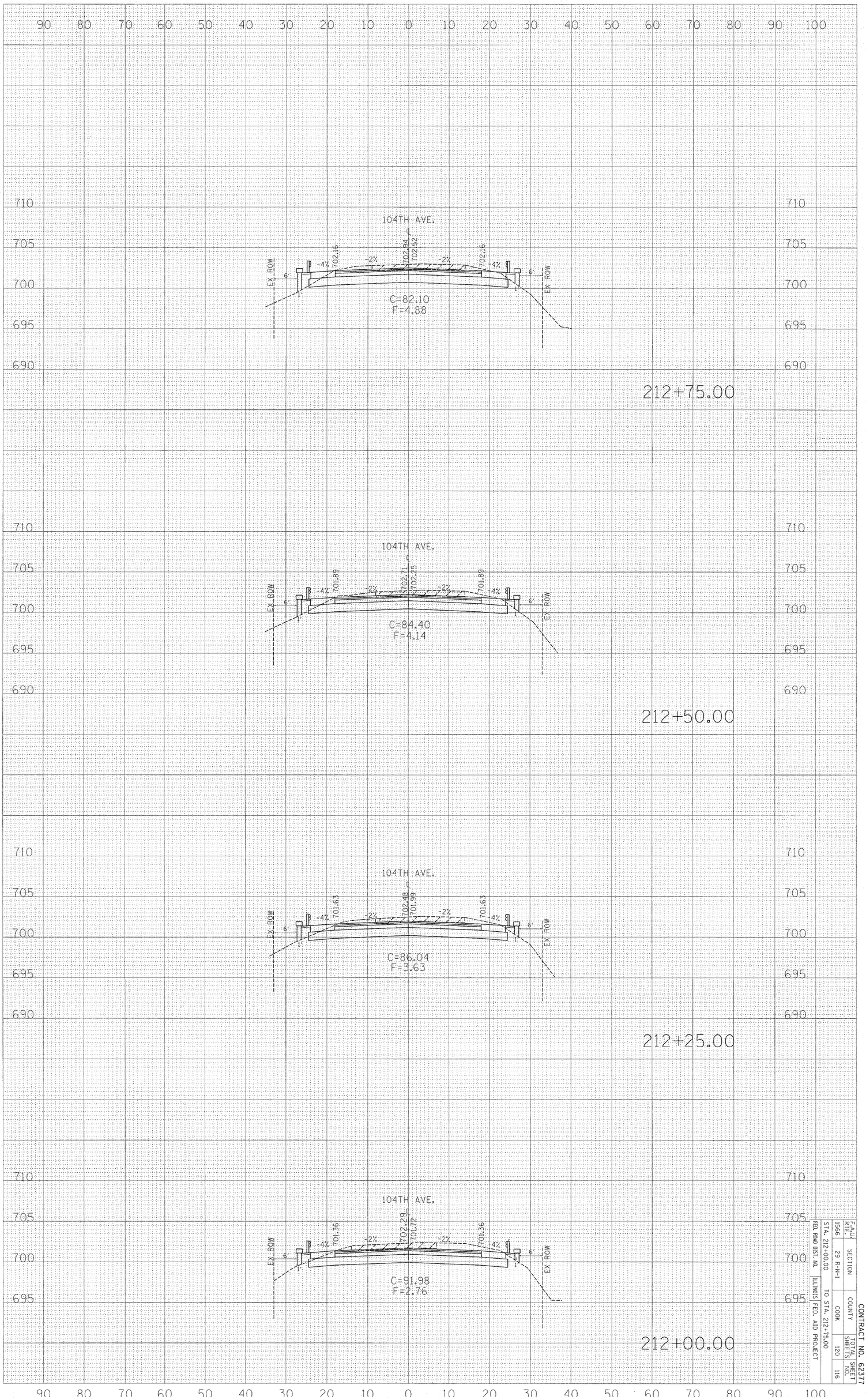

F.A.U. RTE.	SECTION	COUNTY	TOTAL SHEETS	SHEET NO.
1566	29 R-N-1	COOK	120	116

STA. 212+00.00 TO STA. 212+75.00

FED. ROAD DIST. NO. ILLINOIS FED. AID PROJECT

CONTRACT NO. 62377

PLOT DATE = 12/7/2011
FILE NAME = c:\pw_work\pwidot\steedpa\d0159910\f144459-ptorsht-104th.dgn
PLOT SCALE = 10.5882 ' / in.
USER NAME = steedpa

ORIGINAL SURVEY		BY	DATE
	SURVEYED		
	PLOTTED		
	AREAS		
NO.	AREAS CHECKED		

FINAL SURVEY		BY	DATE
	SURVEYED		
NOTE BOOK	PLOTTED		
	TEMPLATE		
	AREAS		
NO.	AREAS CHECKED		

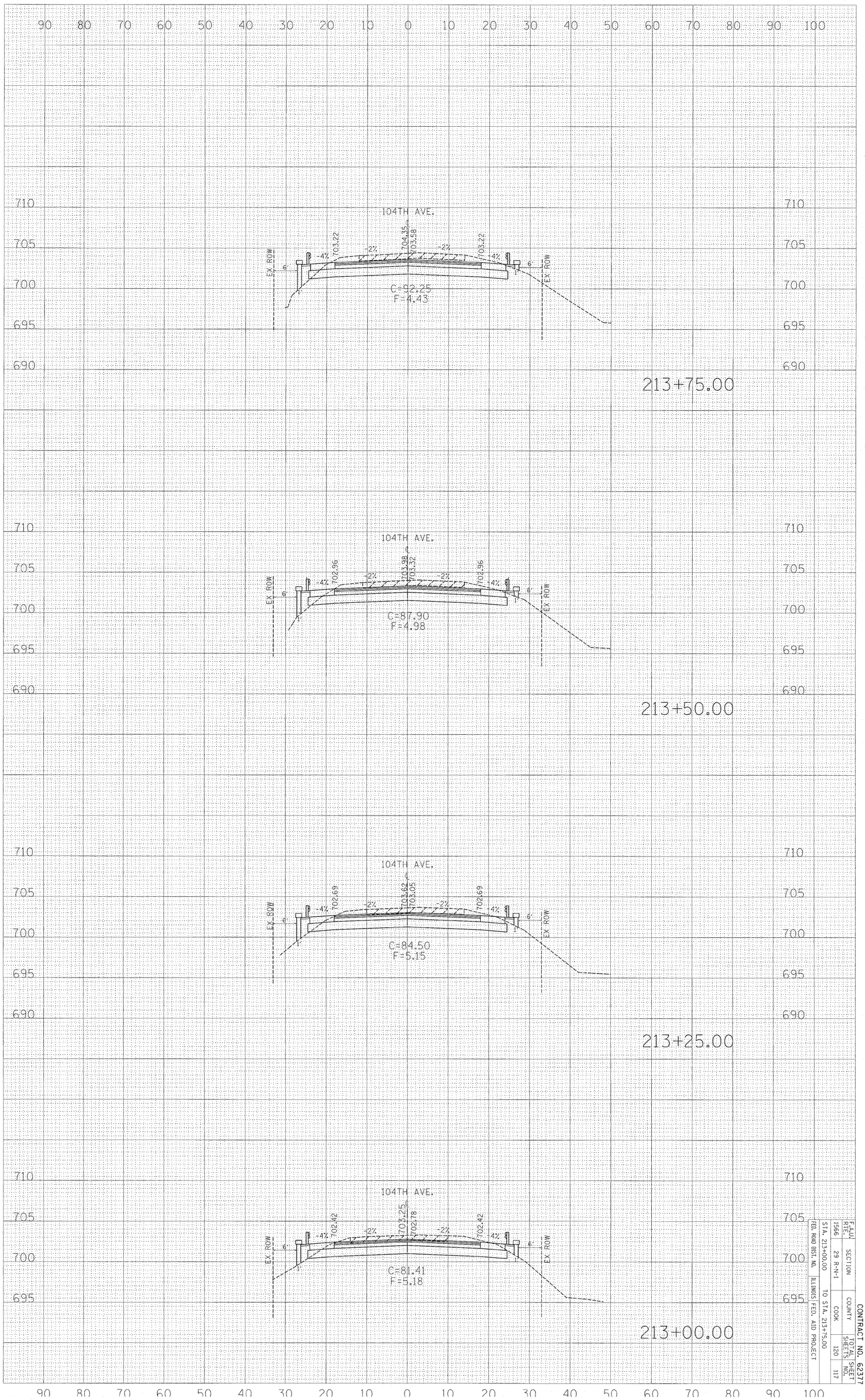

F.A.U. RTE.	SECTION	COUNTY	TOTAL SHEETS	SHEET NO.
1566	29 R-N-1	COOK	120	117

STA. 213+00.00 TO STA. 213+75.00

FED. ROAD DIST. NO. ILLINOIS FED. AID PROJECT

CONTRACT NO. 62377

PLOT DATE = 12/7/2011
FILE NAME = c:\pw_work\pwidot\steedpa\d0159916\Plate09-sheet-104th.dgn
PLOT SCALE = 10.5882 ' / in.
USER NAME = steedpa

ORIGINAL SURVEY		BY	DATE
	SURVEYED		
	PLOTTED		
	AREAS		
NO.	AREAS CHECKED		

FINAL SURVEY		BY	DATE
	SURVEYED		
	PLOTTED		
NOTE BOOK	TEMPLATE		
	AREAS		
NO.	AREAS CHECKED		

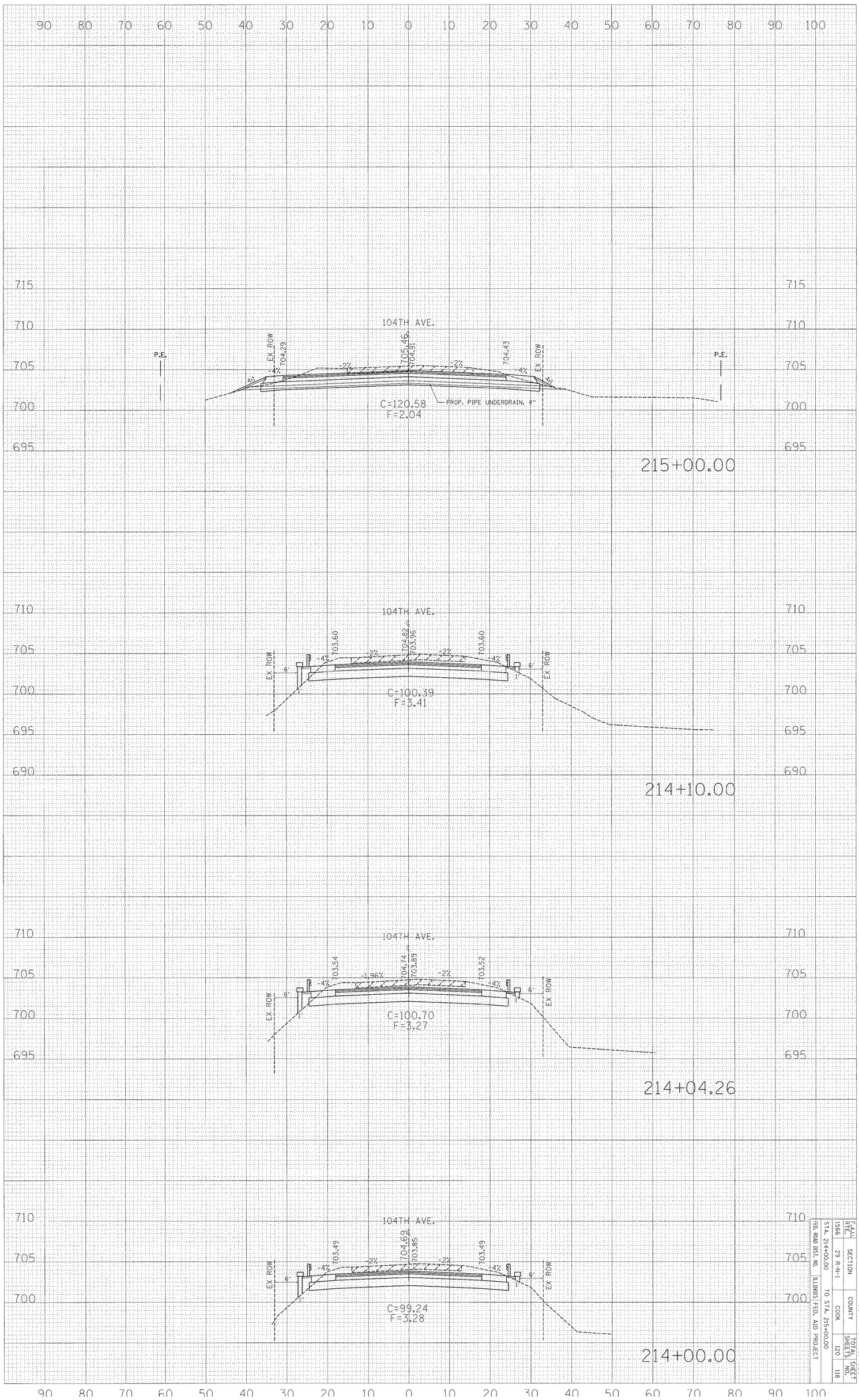

F.A.U. RTE.	SECTION	COUNTY	TOTAL SHEETS	SHEET NO.
1566	29 R-N-1	COOK	120	118

STA. 214+00.00 TO STA. 215+00.00

FED. ROAD DIST. NO. ILLINOIS FED. AID PROJECT

CONTRACT NO. 62377

PLOT DATE = 12/7/2011
FILE NAME = c:\pw_work\pwidot\steedpa\d0159910\P144488-Plotscale-104th.dgn
PLOT SCALE = 10.5882 ' / in.
USER NAME = steedpa

ORIGINAL SURVEY		BY	DATE
	SURVEYED		
	PLOTTED		
	AREAS		
NO.	AREAS CHECKED		

FINAL SURVEY		BY	DATE
	SURVEYED		
NOTE BOOK	PLOTTED		
	TEMPLATE		
	AREAS		
NO.	AREAS CHECKED		

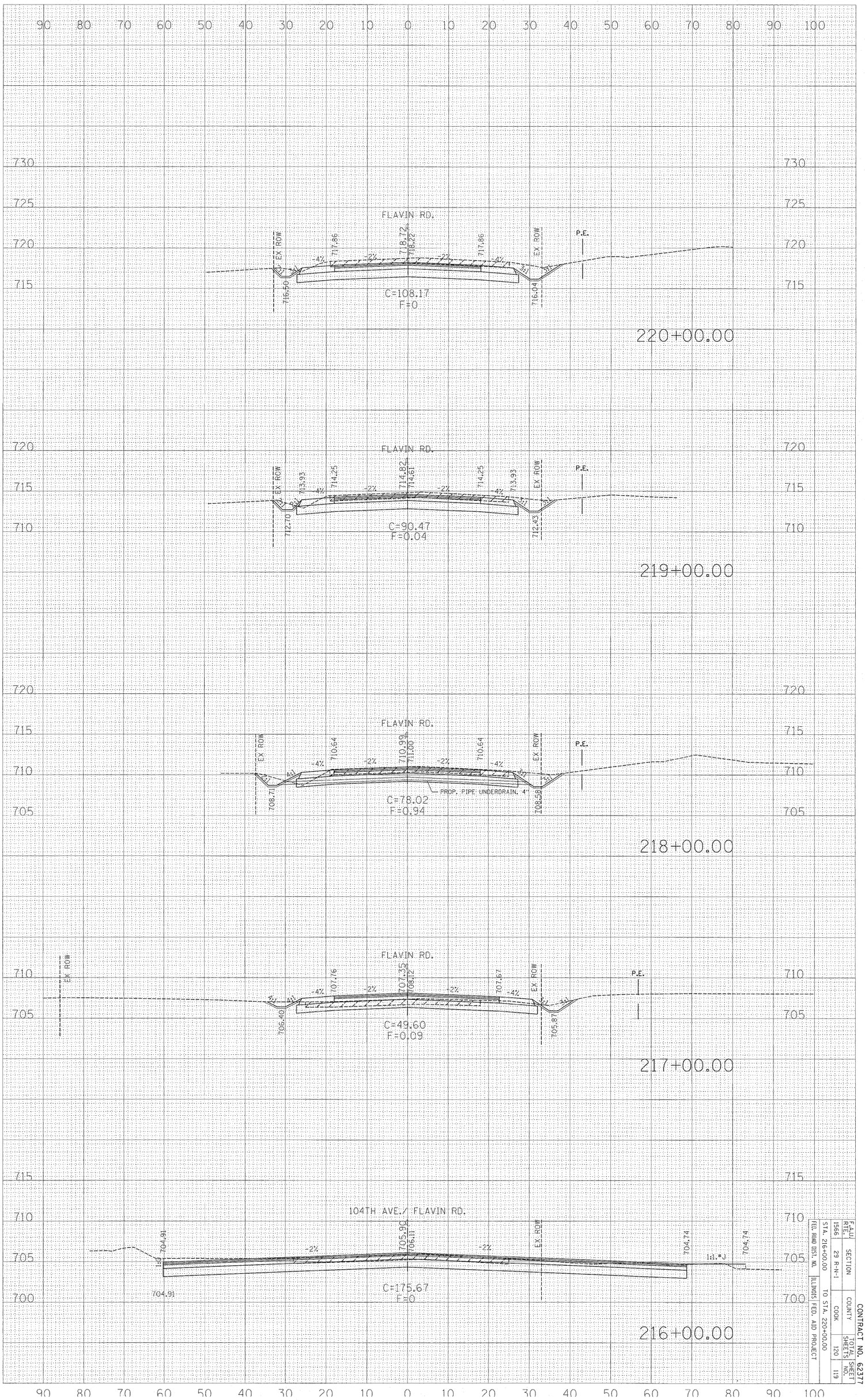

CONTRACT NO. 62377

F.A.U. RTE.	SECTION	COUNTY	TOTAL SHEETS	SHEET NO.
1566	29 R-N-1	COOK	120	119

STA. 216+00.00 TO STA. 220+00.00
FED. ROAD DIST. NO. ILLINOIS FED. AID PROJECT

PLOT DATE = 12/7/2011
FILE NAME = c:\pw_work\pwidot\steedpa\d0159910\PI44489-sheet4-104th.dgn
PLOT SCALE = 10.5882 ' / in.
USER NAME = steedpa

ORIGINAL SURVEY		BY	DATE
	SURVEYED		
	PLOTTED		
	AREAS		
NO.	AREAS CHECKED		

FINAL SURVEY		BY	DATE
	SURVEYED		
	PLOTTED		
NOTE BOOK	TEMPLATE		
	AREAS		
NO.	AREAS CHECKED		

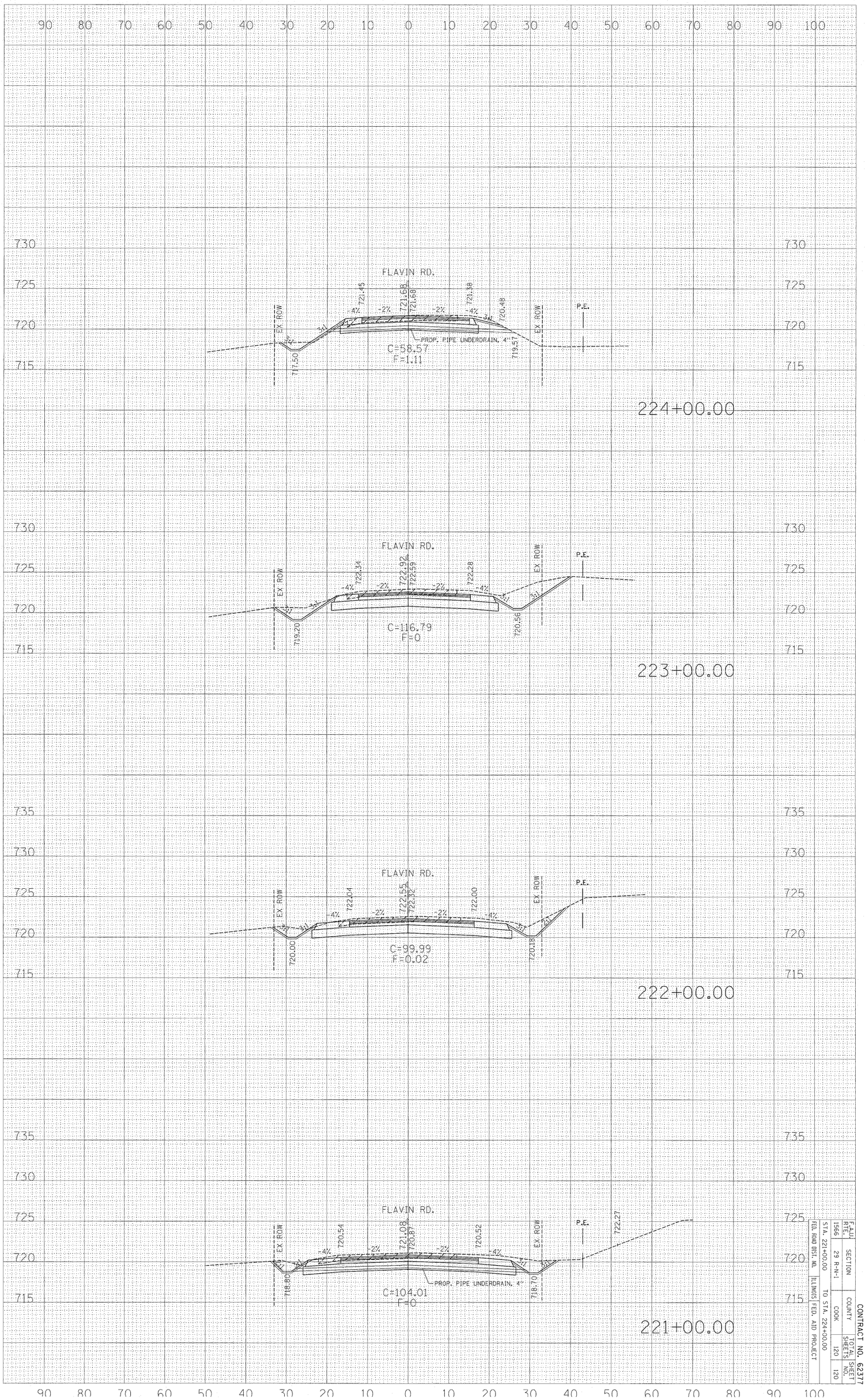

CONTRACT NO. 62377

F.A.U. RTE.	SECTION	COUNTY	TOTAL SHEETS	SHEET NO.
1566	29 R-N-1	COOK	120	120

STA. 221+00.00 TO STA. 224+00.00

FED. ROAD DIST. NO. ILLINOIS FED. AID PROJECT