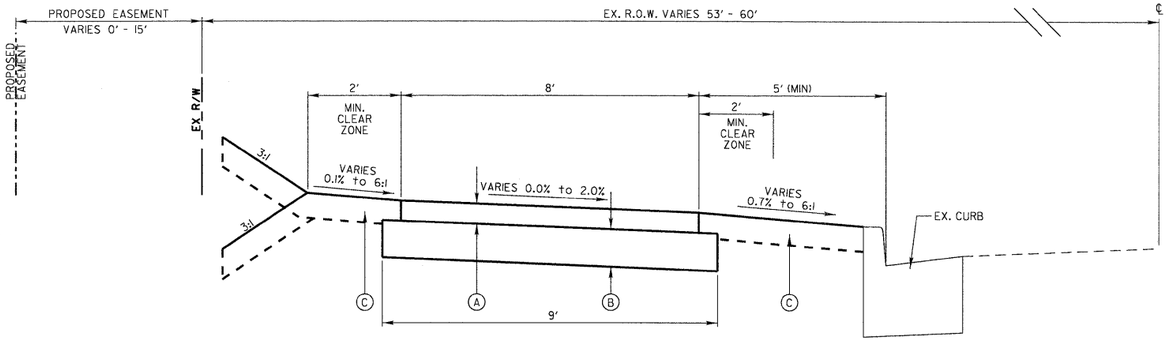

(A) 3" HOT-MIX ASPHALT SURFACE COURSE, MIX "D", N50

(B) AGGREGATE BASE COURSE, TYPE B, 6"

(C) FURNISHING AND PLACING TOPSOIL, 4". REFER TO EROSION CONTROL PLAN FOR TYPE OF RESTORATION.

STA. 0+56.59 TO STA. 22+00.00
STA. 109+50.00 TO STA. 112+96.71

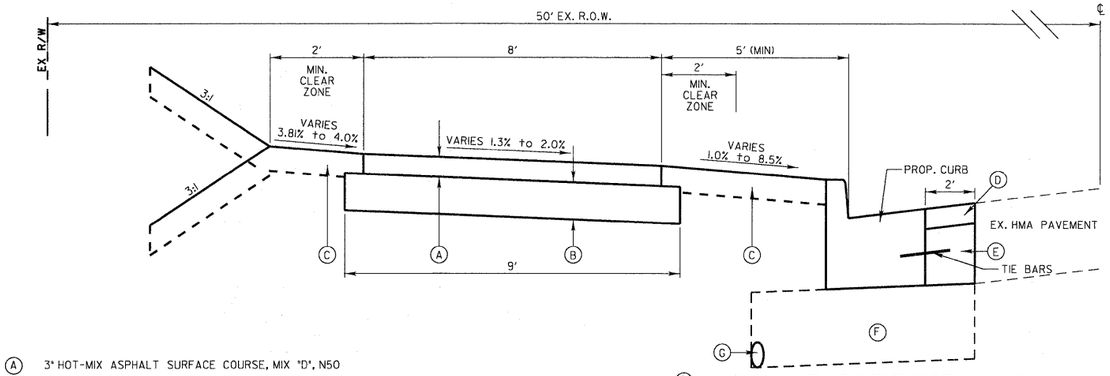

(A) 3" HOT-MIX ASPHALT SURFACE COURSE, MIX "D", N50

(B) AGGREGATE BASE COURSE, TYPE B, 6"

(C) FURNISHING AND PLACING TOPSOIL, 4". REFER TO EROSION CONTROL PLAN FOR TYPE OF RESTORATION.

STA. 71+50.00 TO STA. 75+50.00

(D) 1-1/2" HOT-MIX ASPHALT SURFACE COURSE, MIX "D", N50

(E) PCC BASE COURSE WIDENING, 8"

(F) AGGREGATE BASE COURSE, TYPE B, 12"

(G) PIPE UNDERDRAINS, 4"

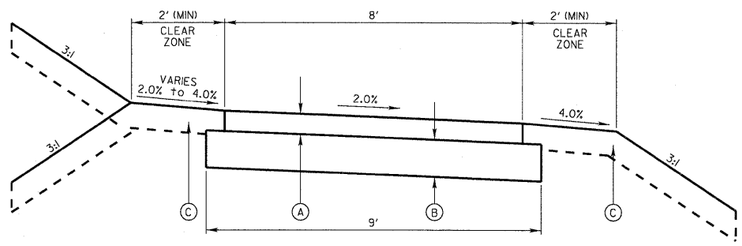

(A) 3" HOT-MIX ASPHALT SURFACE COURSE, MIX "D", N50

(B) AGGREGATE BASE COURSE, TYPE B, 6"

(C) FURNISHING AND PLACING TOPSOIL, 4". REFER TO EROSION CONTROL PLAN FOR TYPE OF RESTORATION.

STA. 64+42.45 TO STA. 66+22.36
STA. 70+09.05 TO STA. 71+50.00

NOTE:
NO RIGHT-OF-WAY IS SHOWN AS WORK IN THIS AREA IS WITHIN MUNDELEIN PARK & RECREATION DISTRICT PROPERTY, OUTSIDE THE LIMITS OF MIDLOTHIAN ROAD RIGHT-OF-WAY.

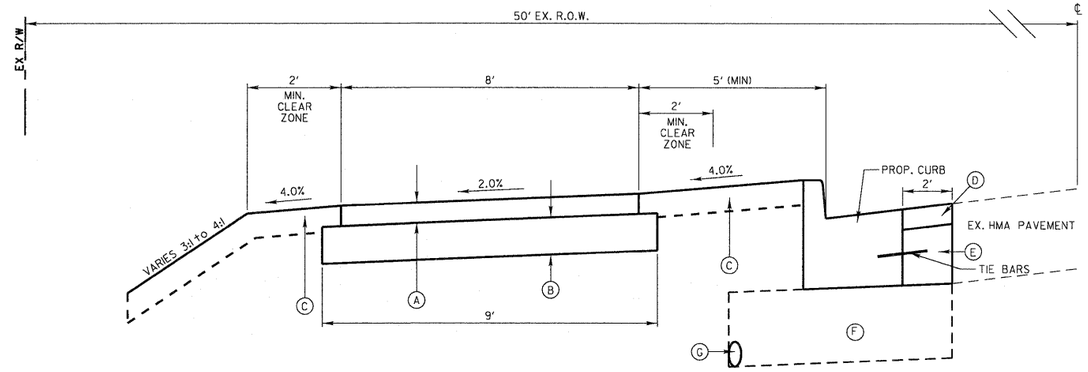

(A) 3" HOT-MIX ASPHALT SURFACE COURSE, MIX "D", N50

(B) AGGREGATE BASE COURSE, TYPE B, 6"

(C) FURNISHING AND PLACING TOPSOIL, 4". REFER TO EROSION CONTROL PLAN FOR TYPE OF RESTORATION.

STA. 75+50.00 TO STA. 78+90.00

(D) 1-1/2" HOT-MIX ASPHALT SURFACE COURSE, MIX "D", N50

(E) PCC BASE COURSE WIDENING, 8"

(F) AGGREGATE BASE COURSE, TYPE B, 12"

(G) PIPE UNDERDRAINS, 4"

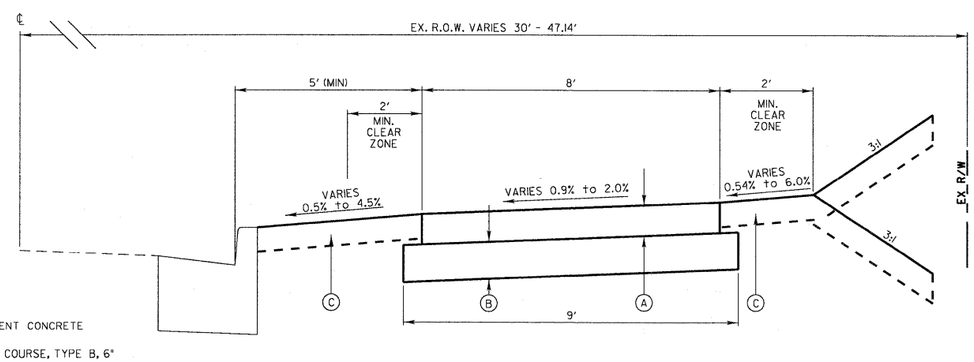

(A) 5" PORTLAND CEMENT CONCRETE

(B) AGGREGATE BASE COURSE, TYPE B, 6"

(C) FURNISHING AND PLACING TOPSOIL, 4". REFER TO EROSION CONTROL PLAN FOR TYPE OF RESTORATION.

STA. 300+53.80 TO STA. 303+33.47 (SHEFIELD AVE)

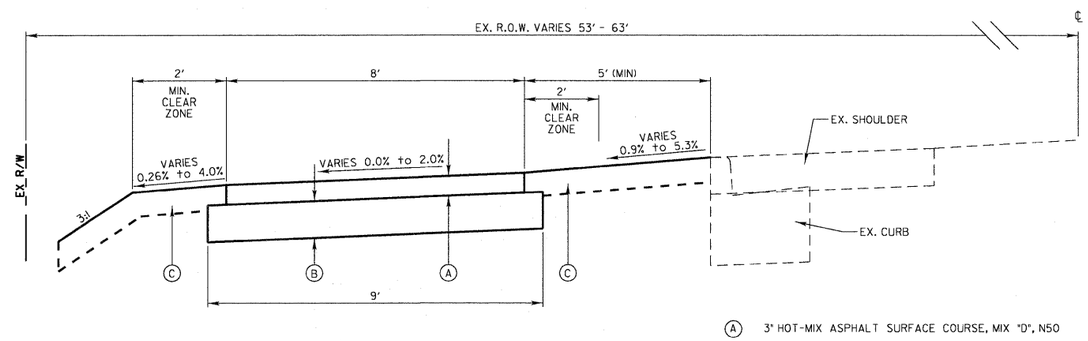

STA. 22+00.00 TO STA. 26+48.04
STA. 95+90.00 TO STA. 109+50.00

(A) 3" HOT-MIX ASPHALT SURFACE COURSE, MIX "D", N50

(B) AGGREGATE BASE COURSE, TYPE B, 6"

(C) FURNISHING AND PLACING TOPSOIL, 4". REFER TO EROSION CONTROL PLAN FOR TYPE OF RESTORATION.

FILE NAME - $FILEL$	USER NAME - $USER$	DESIGNED -	REVISED -	STATE OF ILLINOIS DEPARTMENT OF TRANSPORTATION	TYPICAL SECTIONS	F.A.U RTE.	SECTION	COUNTY	TOTAL SHEETS / SHEET NO.
		DRAWN -	REVISED -			2605	09-00171-13-BT	LAKE	59 / 7
	PLOT SCALE - $SCALE$	CHECKED -	REVISED -					CONTRACT NO. 63619	
	PLOT DATE - $DATE$	DATE -	REVISED -		SCALE: H:1"=2' V:1"=1' / SHEET NO. 1 OF 1 SHEETS / STA. TO STA.		ILLINOIS	FED. AID PROJECT	