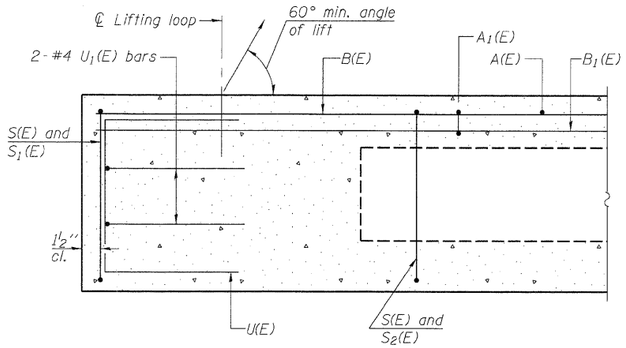

SECTION A-A

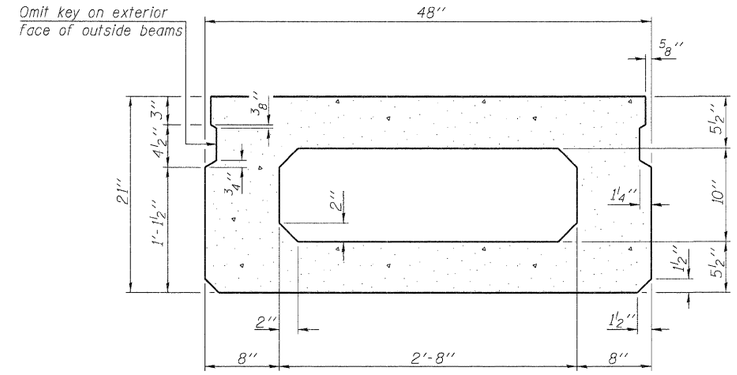

SECTION B-B
(Showing dimensions)

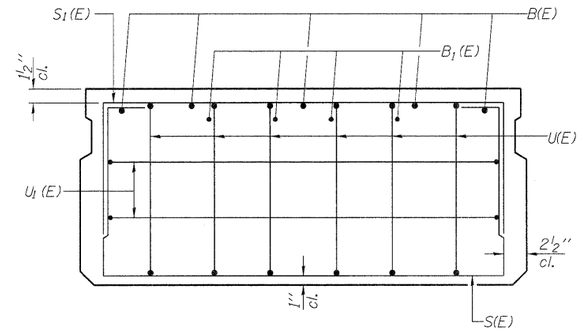

VIEW C-C

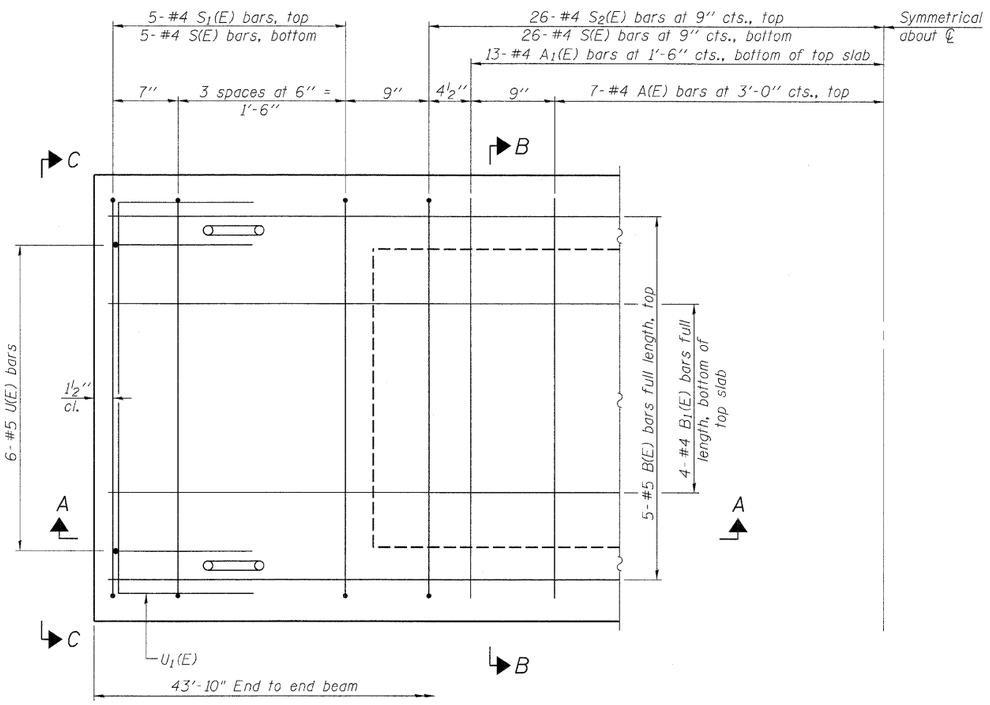

PLAN VIEW

Note: Spacing of S(E) and S_2(E) bars may be adjusted up to 4" in the immediate area of the transverse tie diaphragms to miss the block outs for the transverse ties.

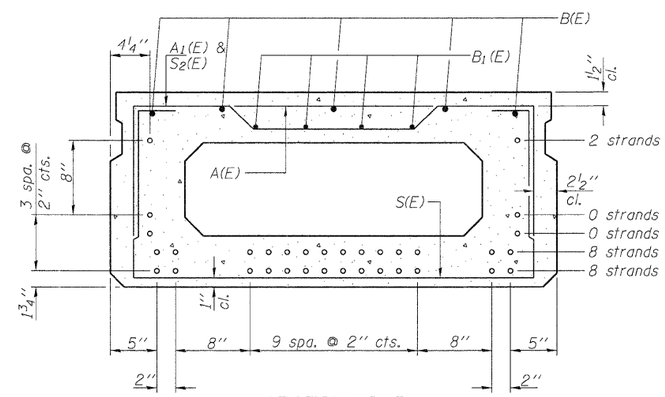

SECTION B-B
(Showing reinforcement and permissible strand locations)

Note: Place the number of strands specified in each row symmetrically about the centerline of beam in the permissible strand locations shown.

BAR LIST
ONE BEAM ONLY
(For Information Only)

Bar	No.	Size	Length	Shape
A(E)	14	#4	3'-7"	—
A_1(E)	26	#4	3'-10"	~
B(E)	5	#5	43'-7"	—
B_1(E)	4	#4	43'-7"	—
S(E)	52	#4	7'-5"	⊔
S_1(E)	10	#4	5'-11"	⊓
S_2(E)	52	#4	6'-2"	⊓
U(E)	12	#5	4'-0"	⊏
U_1(E)	4	#4	6'-0"	⊓

Note: See sheet 9 of 17 for additional details and Bill of Material.

MINIMUM BAR LAP
#4 bar = 2'-0"
#5 bar = 2'-6"

Notes: Compressive strength of prestressed concrete, f'c, shall be 6000 psi.
Compressive strength of prestressed concrete at release, f'ci, shall be 5000 psi.

USER NAME = martinl
PLOT DATE = 12/6/2011
FILE NAME = X:\P\113-2245-000 Prairie Street\CADD\S\Sheets\Prairie 08 - PPC Deck Beam.dgn

RS&H IMPROVING YOUR WORLD

DESIGNED - LM	REVISED -	
CHECKED - GG	REVISED -	
DRAWN - LM	REVISED -	
CHECKED - DSB	REVISED -	

STATE OF ILLINOIS
DEPARTMENT OF TRANSPORTATION

21" x 48" PPC DECK BEAM
STRUCTURE NO. 045-3094

SHEET NO. 8 OF 17 SHEETS

F.A.U. RTE.	SECTION	COUNTY	TOTAL SHEETS	SHEET NO.
3895	08-15104-01-BR	KANE	38	21

CONTRACT NO. 63661
ILLINOIS FED. AID PROJECT