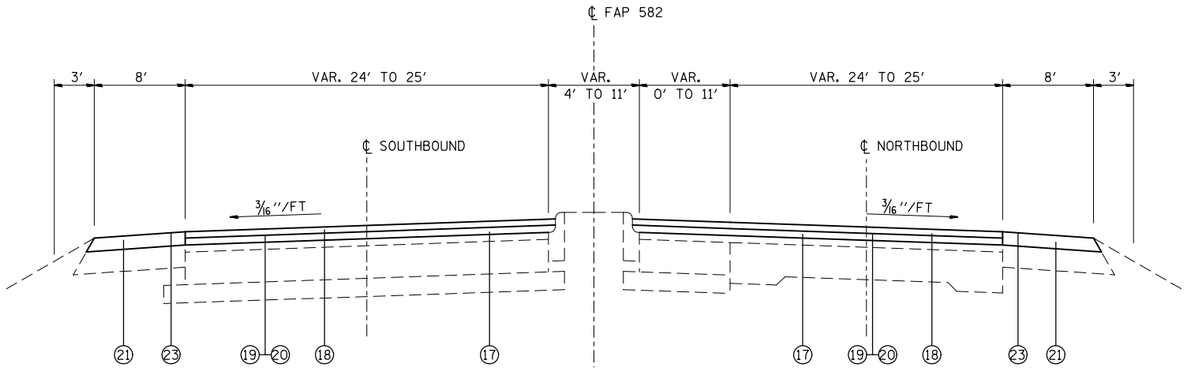

TYPICAL SECTION

STA. 95+40 TO STA. 96+00

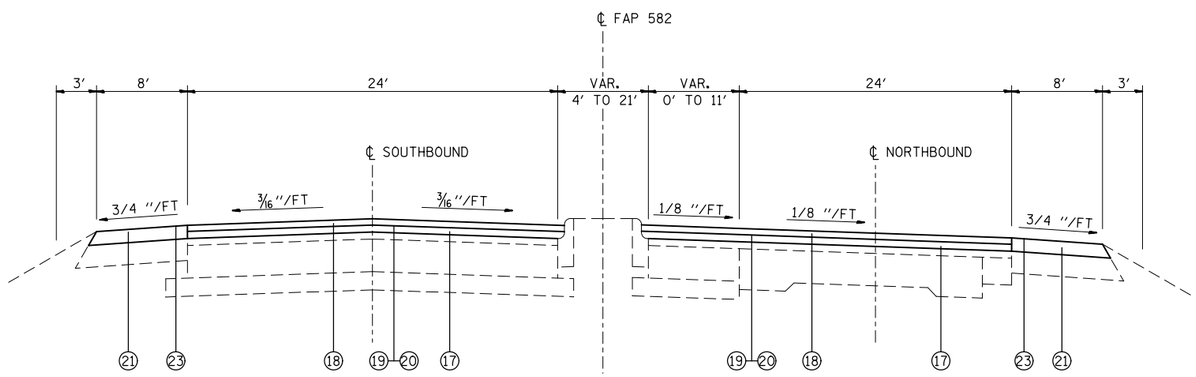

TYPICAL SECTION

STA. 96+00 TO STA. 100+42

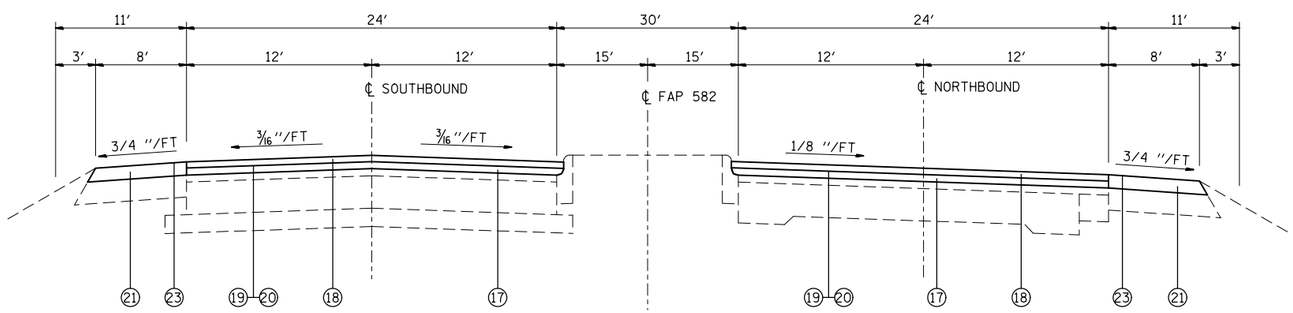

TYPICAL SECTION

STA. 100+42 TO STA. 104+35

LEGEND

- (17) PROPOSED POLY-LEVELING BINDER (MM) N50, 3/4″
- (18) PROPOSED POLY-HMA SURFACE COURSE, MIX E, N90, 1 1/2″
- (19) PROPOSED BITUMINIOUS MATERIAL (PRIME COAT)
- (20) PROPOSED AGGREGATE (PRIME COAT)
- (21) PROPOSED HMA SHOULDERS 2 1/4″
- (22) PROPOSED AGGREGATE WEDGE SHOULDER
- (23) PROPOSED SHOULDER RUMBLE STRIP