ROUTE	SECTION	COUNTY	TOTAL SHEETS	SHEET NO.
T.R. 165	05-18109-00-BR	WAYNE	14	7
ORCHARD ROAD DISTRICT		ILLINOIS		

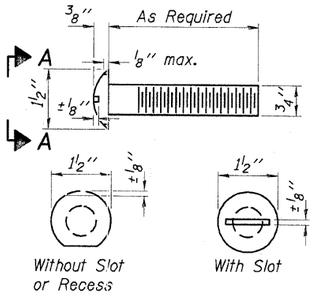

VIEW A-A
ROUND HEAD BOLT

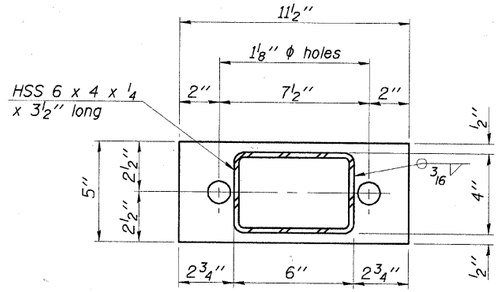

PL 1/2" x 11 1/2" x 5"

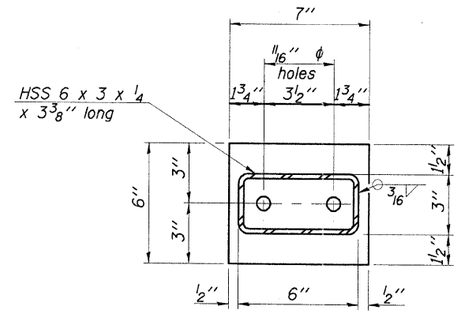

PL 1/2" x 7" x 6"

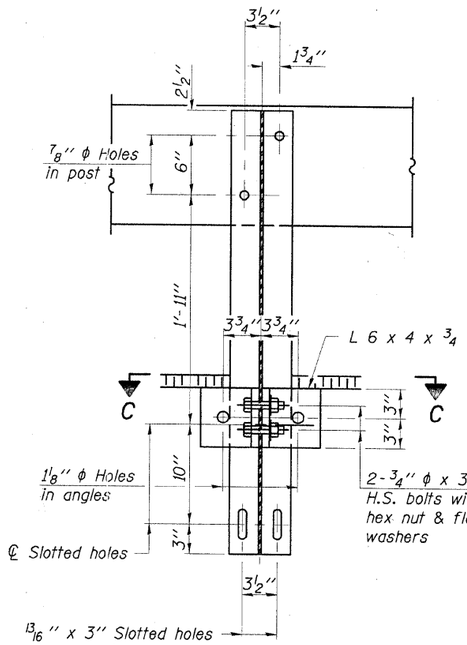

SECTION B-B

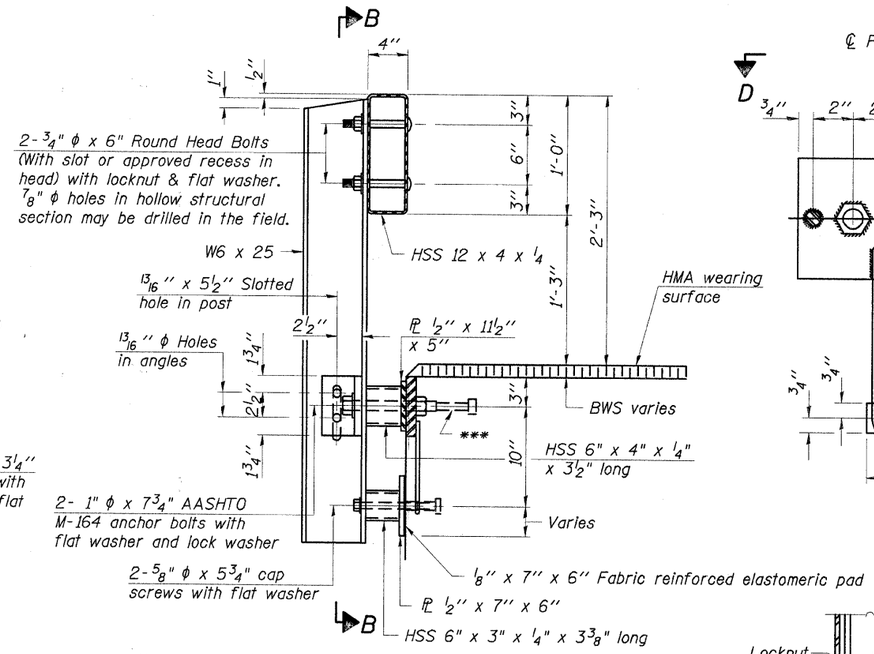

SECTION AT RAILING POST

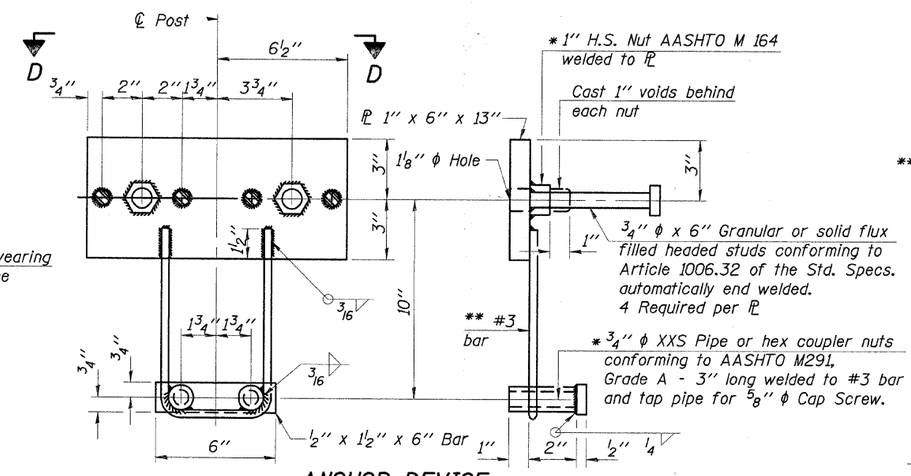

ANCHOR DEVICE

* Threaded areas shall be plugged or blocked off during casting of beam.

Notes:

All field drilled holes shall be coated with an approved zinc rich paint before erection.

For multi-span bridges, sufficient 1/4" x 6" x 1'-2" galvanized steel shims shall be provided to align rail between adjacent spans. Cost included with Steel Railing, Type S-1.

All steel rail elements shall be galvanized according to Article 509.05 of the Standard Specifications.

*** The studs of the anchor devices shall be placed below the top reinforcement bars and the outermost longitudinal reinforcement bar shall be placed directly above the studs of the rail post anchor device.

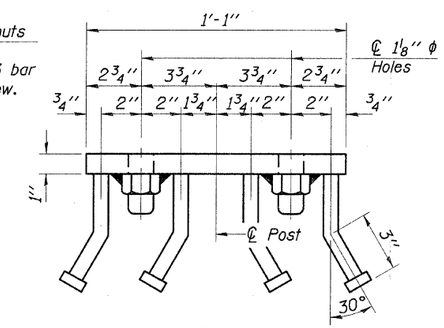

VIEW D-D

** Whenever the lower insert assemblies interfere with strand locations, the #3 bars shall be cut and adjusted in order to allow raising or lowering of the lower inserts. Maximum adjustment not to exceed 1/2".

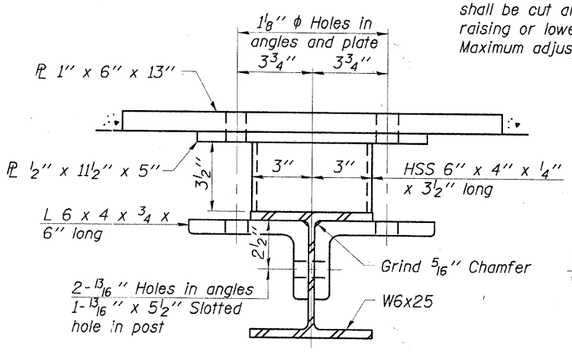

SECTION C-C

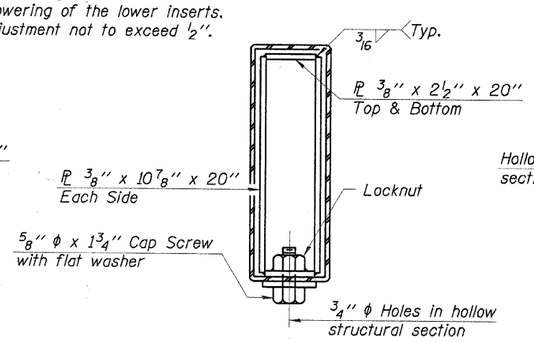

SECTIONS AT RAIL SPLICE

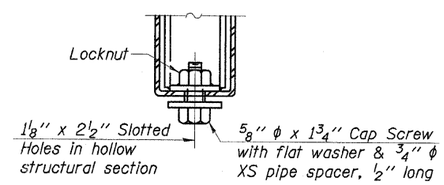

RAIL SPLICE CONNECTION
AT EXPANSION JT.

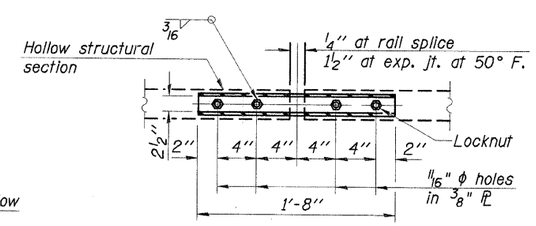

PLAN-BOTT. SPLICE PL
TYPICAL

1 1/8" ϕ Holes for 1" ϕ x 4" Round head bolts. Provide 2 flat washers & locknuts for guard rail connection shown on Hwy Std. 631026 or BLR 27-1.

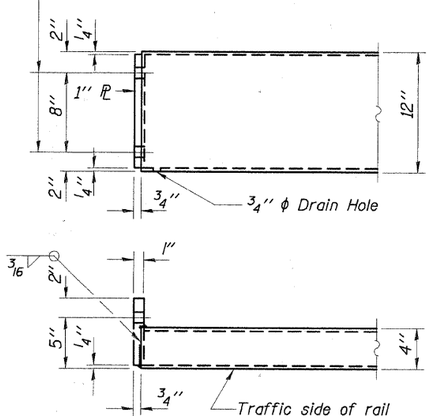

END OF RAIL DETAILS

BILL OF MATERIAL

Item	Unit	Quantity
Steel Railing, Type S-1	Foot	130

STEEL RAILING, TYPE S-1

CHARLESTON ENGINEERING, INC.
CONSULTING ENGINEERS
105 NORTH KITCHELL
P.O. BOX 397
OLNEY, ILLINOIS 62450
(618) 392-0736
ILLINOIS DEPARTMENT OF PROFESSIONAL REGULATION REGISTRATION #184.003513

STEEL RAILING, TYPE S-1
STRUCTURE NO. 096-3458
T.R. 165
OVER POPLAR CREEK
SECTION 05-18109-00-BR
WAYNE COUNTY