F.A.P. RTE.	SECTION	COUNTY	TOTAL SHEETS	SHEET NO.
347	2525.3-14-RR	COOK	17	15
STA.		TO STA.		
FED. ROAD DIST. NO.	ILLINOIS	FED. AID PROJECT		

CONTRACT #62956

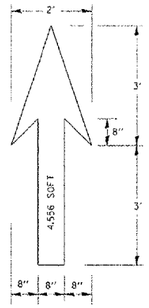

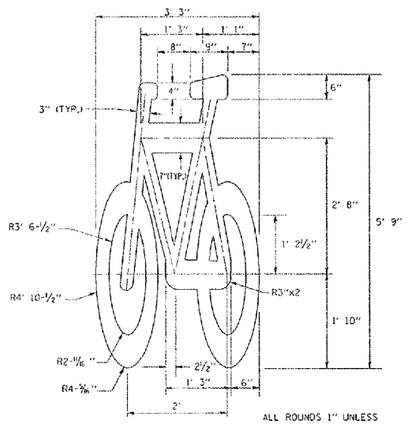

BICYCLE LANE SYMBOL

ALL ROUNDS 1" UNLESS OTHERWISE NOTED.

NOTE:
1.) FOR BIKE LANE SYMBOLS ONLY, USE PRE-FORMED THERMOPLASTIC WITH A MINIMUM THICKNESS OF 90 MILS, MINIMUM SKID RESISTANCE VALUE OF 60 BPN, & A MINIMUM INDEX OF REFRACTION OF 1.50.

2.) THE RESIDENT ENGINEER SHALL CONTACT MR. BEN GOMBERG AT 312-744-8093 AT LEAST ONE CALENDAR WEEK PRIOR TO INSTALLING BIKE LANE SYMBOLS.

TYPICAL BIKE LANE SYMBOLS
DRAWING #28

DRAWING #29

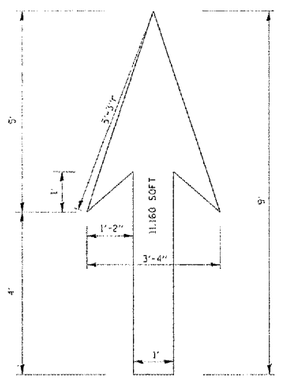

DRAWING #30

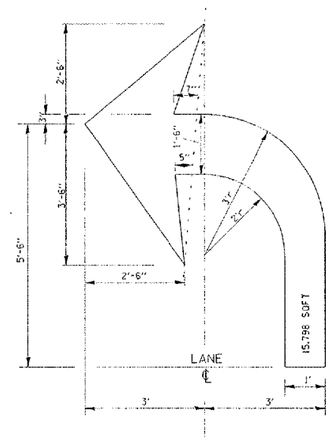

DRAWING #31

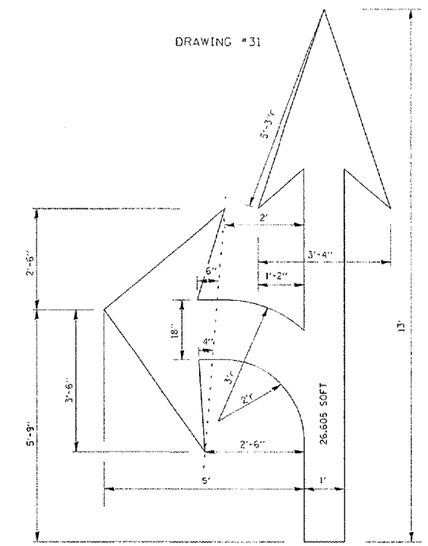

DRAWING #32

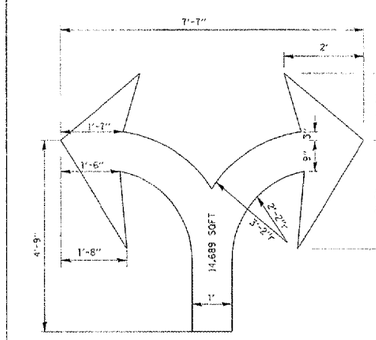

DRAWING #33

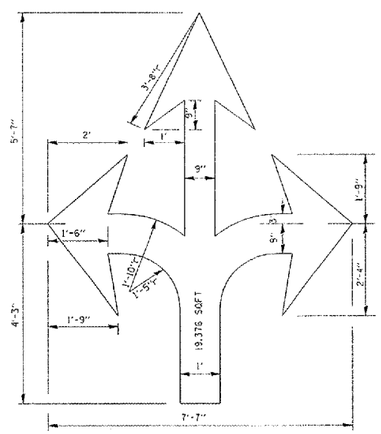

DRAWING #34

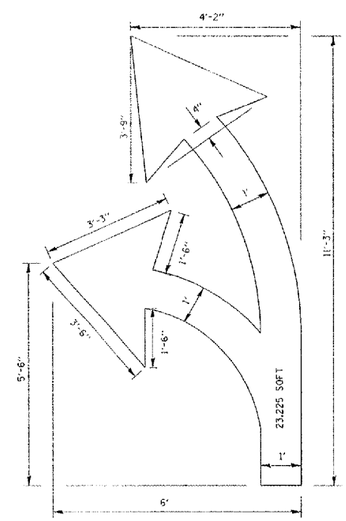

DRAWING #35

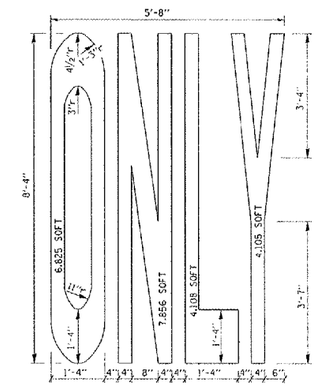

NOTE:
ALL MARKINGS SHALL BE SOLID WHITE UNLESS OTHERWISE NOTED IN THE PLANS

2 OF 2

REVISIONS	
NAME	DATE
T. RAMMACHER	12/07/00

ILLINOIS DEPARTMENT OF TRANSPORTATION

CITY OF CHICAGO
TYPICAL PAVEMENT MARKINGS.

SCALE: NONE
DATE 03/09/2004
DRAWN BY
CHECKED BY
TC-24

03/05/2004
W:\elisstd\tc24.dgn
V8 TC24
LEYSA

REVISION DATE: 02/25/04