STATE OF ILLINOIS
DEPARTMENT OF TRANSPORTATION

ROUTE NO.	SECTION	COUNTY	TOTAL SHEETS	SHEET NO.
78	(10BR-3)D & 11BR-8	JO DAVIESS	45	39
FED. ROAD DIST. NO. 7		ILLINOIS	FED. AID PROJECT-	

SHEET NO. 12
12 SHEETS

Contract # 64B27

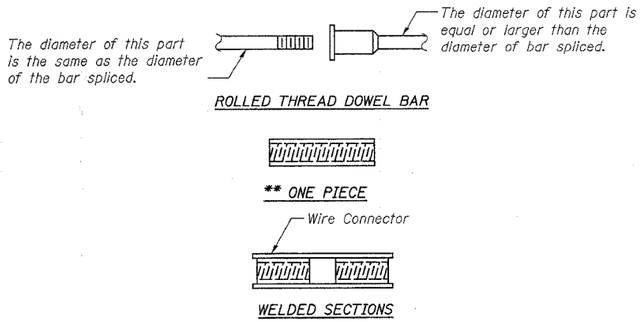

BAR SPLICER ASSEMBLY ALTERNATIVES

** Heavy Hex Nuts conforming to ASTM A 563, Grade C, D or DH may be used.

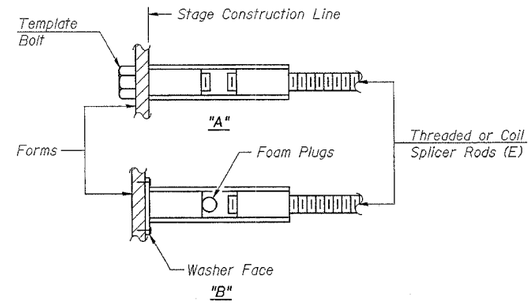

INSTALLATION AND SETTING METHODS

"A" : Set bar splicer assembly by means of a template bolt.
"B" : Set bar splicer assembly by nailing to wood forms or cementing to steel forms.
(E) : Indicates epoxy coating.

NOTES

Bar splicer assemblies shall be of an approved type and shall develop in tension at least 125 percent of the yield strength of the lapped reinforcement bars.

Splicer rods shall be of minimum 60 ksi yield strength, threaded or coiled full length.

All reinforcement bars shall be lapped and tied to the splicer rods or dowel bars.

Bar splicer assemblies shall be epoxy coated according to the requirements for reinforcement bars.

Other systems of similar design may be submitted to the Engineer for approval. Approval shall be based on certified test results from an approved testing laboratory that the proposed bar splicer assembly satisfies the following requirements:

1. Minimum Capacity (Tension in kips) $= 1.25 \times f_y \times A_t$
2. Minimum *Pull-out Strength (Tension in kips) $= 1.25 \times fs_{allow} \times A_t$

Where f_y = Yield strength of lapped reinforcement bars in ksi.
fs_{allow} = Allowable tensile stress in lapped reinforcement bars in ksi (Service Load)
A_t = Tensile stress area of lapped reinforcement bars.
* = 28 day concrete

BAR SPLICER ASSEMBLIES			
Bar Size to be Spliced	Splicer Rod or Dowel Bar Length	Strength Requirements	
		Min. Capacity kips - tension	Min. Pull-Out Strength kips - tension
#4	1'-8"	14.7	5.9
#5	2'-0"	23.0	9.2
#6	2'-7"	33.1	13.3
#7	3'-5"	45.1	18.0
#8	4'-6"	58.9	23.6
#9	5'-9"	75.0	30.0
#10	7'-3"	95.0	38.0
#11	9'-0"	117.4	46.8

Bar splicer assemblies shall be according to Section 508 of the Standard Specifications, except as noted. The furnishing and installation of bar splicer assemblies will be measured and paid for at the contract unit price each for "BAR SPLICERS."

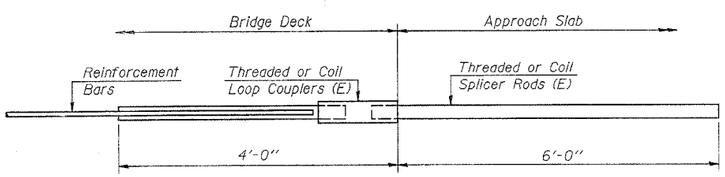

FOR INTEGRAL OR SEMI-INTEGRAL ABUTMENTS

Bar Splicer for #5 bar
Min. Capacity = 23.0 kips - tension
Min. Pull-out Strength = 9.2 kips - tension
No. Required =

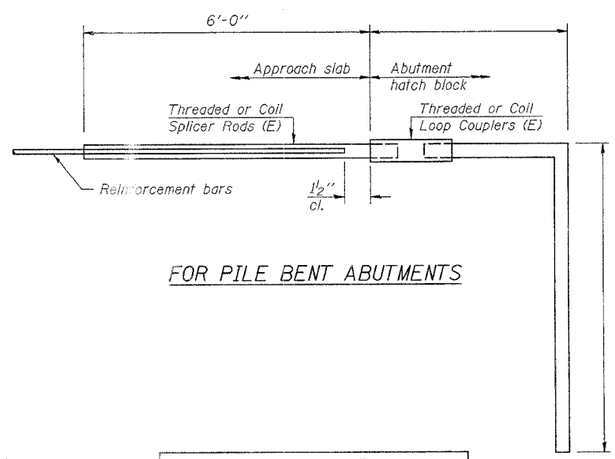

FOR PILE BENT ABUTMENTS

Bar Splicer for #5 bar
Min. Capacity = 23.0 kips - tension
Min. Pull-out Strength = 9.2 kips - tension
No. Required = 74

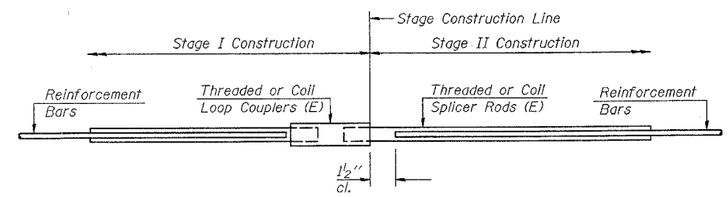

STANDARD

Bar Size	No. Assemblies Required	Location
#4	108	Deck
#5	3	Deck Bm. Block out
#5	6	South Abutment
#5	6	North Abutment

BAR SPLICER ASSEMBLY DETAILS

IL. RTE. 78 OVER
DAVIS CREEK
F.A. 642 SECTION (10BR-3)D & 11BR-8
JO DAVIESS COUNTY
STA. 20+75.37
STRUCTURE NUMBER 043-0042

DESIGNED	CQM
CHECKED	EMM
DRAWN	CQM
CHECKED	EMM

- 200

EXAMINED
ENGINEER OF BRIDGE DESIGN

PASSED
ENGINEER OF BRIDGES AND STRUCTURES

BSD-1 10-22-04

DATE : 12-21-05

10/5/04 6M K:\structure\dgn\IL RTE 78\IVR_JAVIS CREEK\SHEETS FILE:DAVISSB22-BAR SPLICERS.dgn
default
12/23/2005