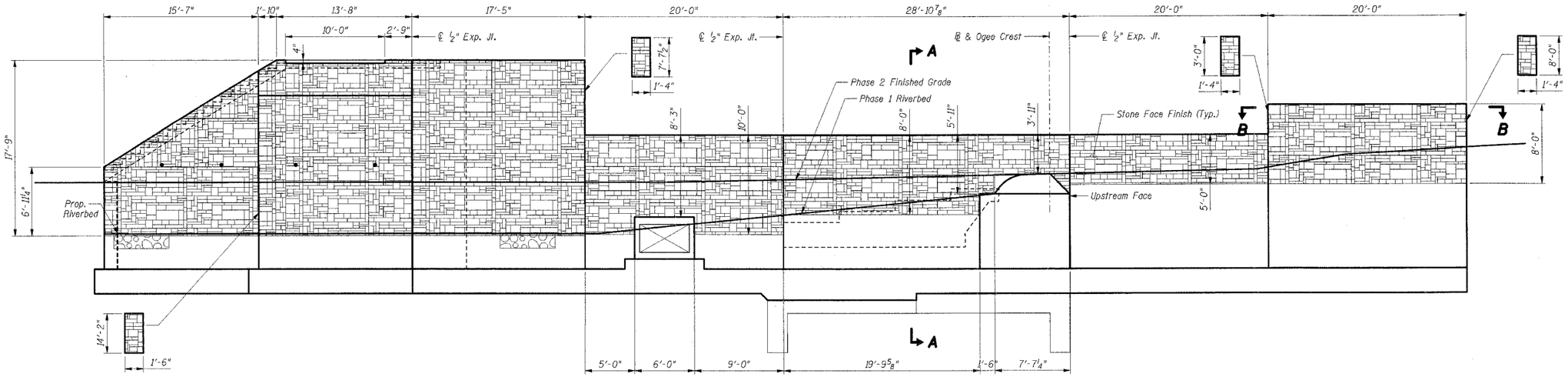

SOUTH WALL ELEVATION
(Looking north)

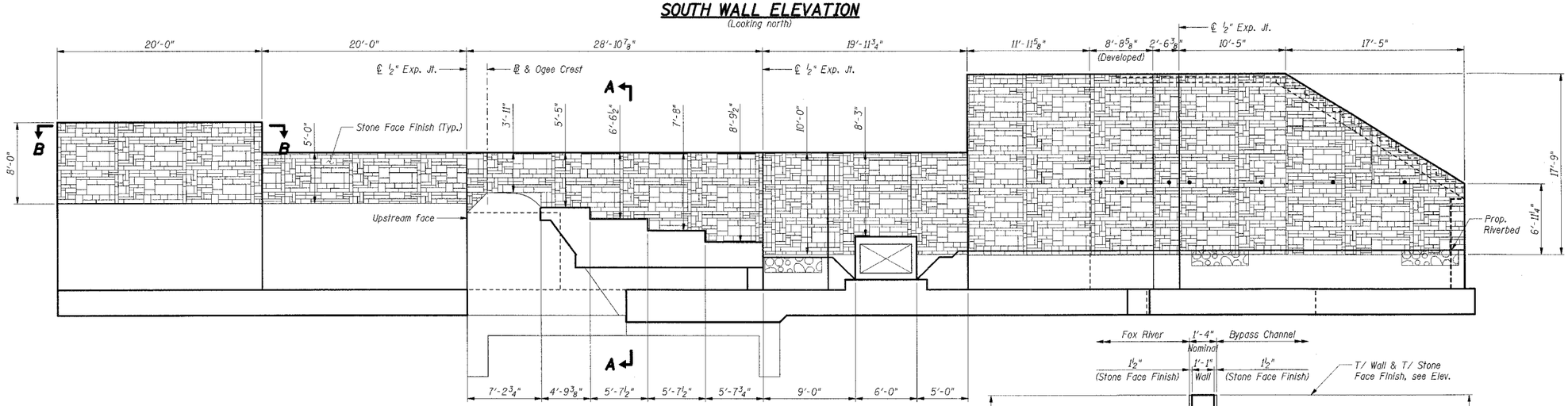

NORTH WALL ELEVATION
(Looking south)

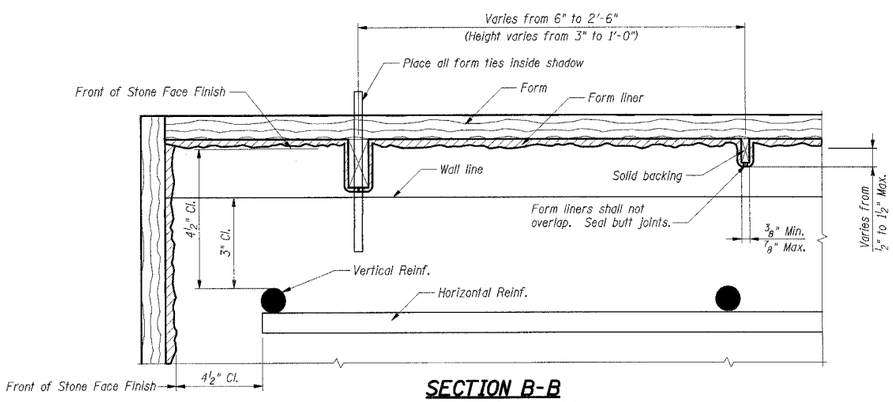

SECTION B-B
(With suggested formwork detail)

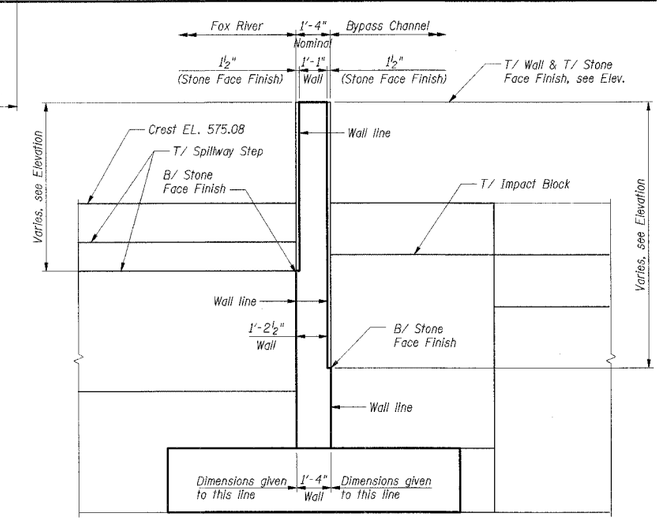

SECTION A-A

Notes:

1. For Bill of Material, see Drwg. S13.

Designed By RDS Checked By NK
Drawn By RDS Checked By NK
SCINTILLED 1-25-2006 1448-67
S:\DOCUMENT\0304880\STRUCT\DGN\DETDOUBLDGN

FR-422

TENG

TENG & ASSOCIATES, INC.
ENGINEERS/ARCHITECTS/PLANNERS
868 N. MICHIGAN AVE. CHICAGO, IL 60611
TELEPHONE: 312/914-0500

SOUTH ABUTMENT WALL FINISH DETAILS