F.A.I. RTE.	SECTION	COUNTY	TOTAL SHEETS	SHEET NO.
90/94	2003-031I	COOK	976	899
STA.		TO STA.		
FED. ROAD DIST. NO. 1	ILLINOIS	FED. AID PROJECT		

62583

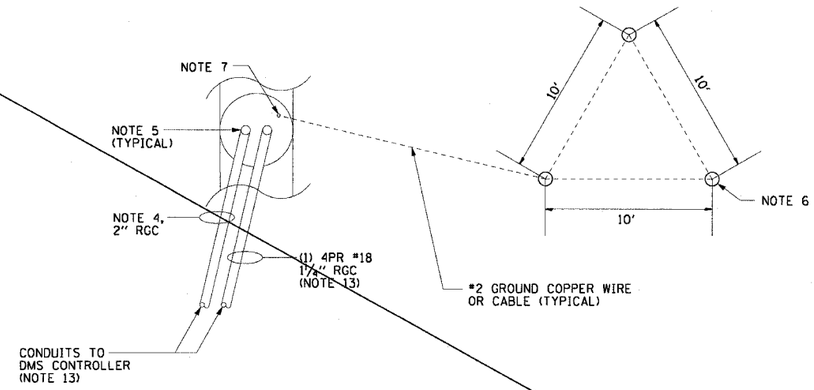

2 / DT-04 SECTION A-A, CONDUIT STUB-UP AT DMS FOUNDATION
NOTE 8

NOTES:

1. SEE DRAWINGS ME-01 AND ME-02 FOR ELECTRICAL SYMBOLS AND ABBREVIATIONS.
2. UNLESS OTHERWISE STATED, ALL CONDUIT TO BE FURNISHED AND INSTALLED BY OTHERS UNDER A SEPARATE CONTRACT.
3. UNLESS OTHERWISE STATED, ALL ELECTRIC CABLE TO BE FURNISHED AND INSTALLED UNDER THIS CONTRACT.
4. POWER CABLES MUST BE AS SHOWN ON DRAWINGS, DMS-01 THROUGH DMS-08.
5. CONDUITS MUST BE STUBBED UP 6" INSIDE THE HOLLOW TRUSS SUPPORT. CABLES MUST BE PULLED TO THE TOP OF THE TRUSS SUPPORT THROUGH THE HOLLOW TRUSS. SEE DETAIL "3" ON THIS DRAWING. PULL WIRE MUST BE INSTALLED IN EACH OF THE SPARE CONDUITS. SPARE CONDUITS MUST BE CAPPED INSIDE THE TRUSS.
6. ¾" X 10' LONG, COPPER WELD GROUND ROD DRIVEN INTO GROUND 9' (TYPICAL FOR 3).
7. GROUND COPPER WIRE MUST BE TERMINATED TO THE ANCHOR ROD USING APPROVED CLAMPS FOR GROUNDING. THE ANCHOR ROD MUST BE GROUND OR FILED TO BRIGHT METAL AT CLAMP AND CABLE CONNECTION LOCATION. GROUNDING BUSHING MUST BE INSTALLED ON EACH CONDUIT AND TIED TO THE GROUNDING SYSTEM AT THE TRUSS SUPPORT FOUNDATION.
8. ALL RODS, CABLES, CONDUITS, CAPS, AND CLAMPS ASSOCIATED WITH THE GROUNDING SYSTEM AT THE SUPPORT FOUNDATION WILL BE FURNISHED AND INSTALLED BY OTHERS UNDER A SEPARATE CONTRACT.
9. 6" X 6" X 40" STAINLESS STEEL PULL BOX, WITH CONTINUOUS HINGED COVER (TYPICAL).
10. CONDUITS MUST BE 2½" FOR POWER CABLES AND 2" FOR COMMUNICATIONS CABLES.
11. THE DYNAMIC MESSAGE SIGN MUST BE PENETRATED FROM THE BACK THROUGH THE OPENINGS PROVIDED BY THE DMS ENCLOSURE MANUFACTURER. CONNECTION BETWEEN THE CONDUIT AND THE DMS ENCLOSURE MUST BE LIQUIDTIGHT FLEXIBLE CONDUIT.
12. CONDUITS MUST BE ROUTED LOW AND AS CLOSE AS POSSIBLE TO THE TRUSS SUPPORT, AND MUST BE FASTENED TO THE SUPPORT ON THE INSIDE.
13. CONDUITS ARE ROUTED TO UPS CABINET FOR SIGN, DMS-31. (1) 4PR #18 CABLE NOT NEEDED FOR DMS-31.
14. THE COST OF FURNISHING AND INSTALLING CONDUITS, CABLES, FASTENERS, PULL BOXES, AND LIQUIDTIGHT FLEXIBLE CONDUITS IS CONSIDERED INCIDENTAL TO THE COST OF DMS INSTALLATION.

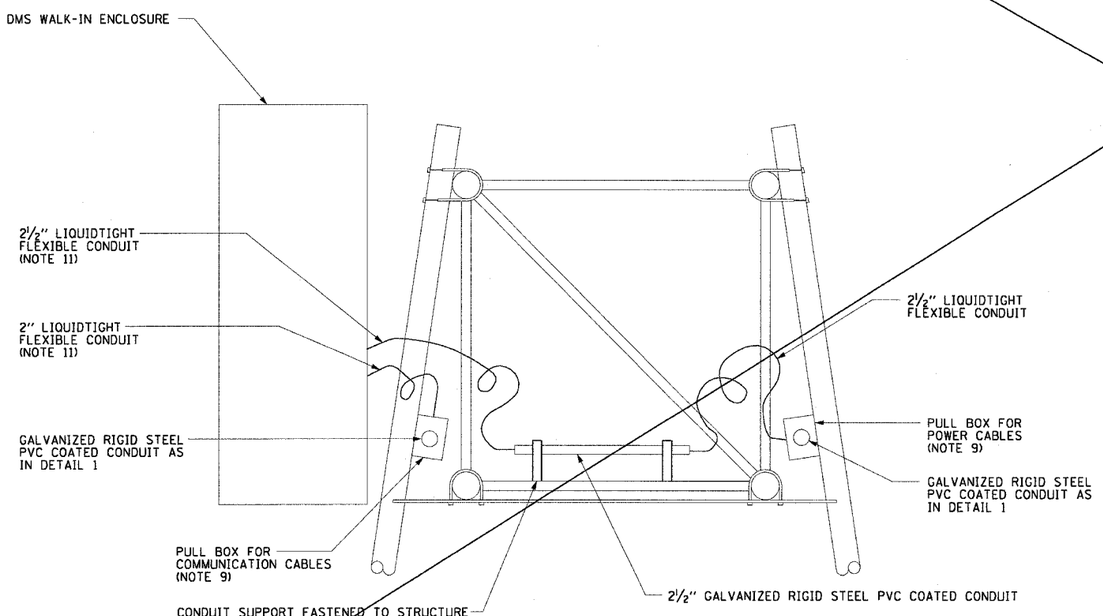

3 / DT-04 SECTION B-B, PARTIAL SIDE ELEVATION OF SIGN SUPPORT

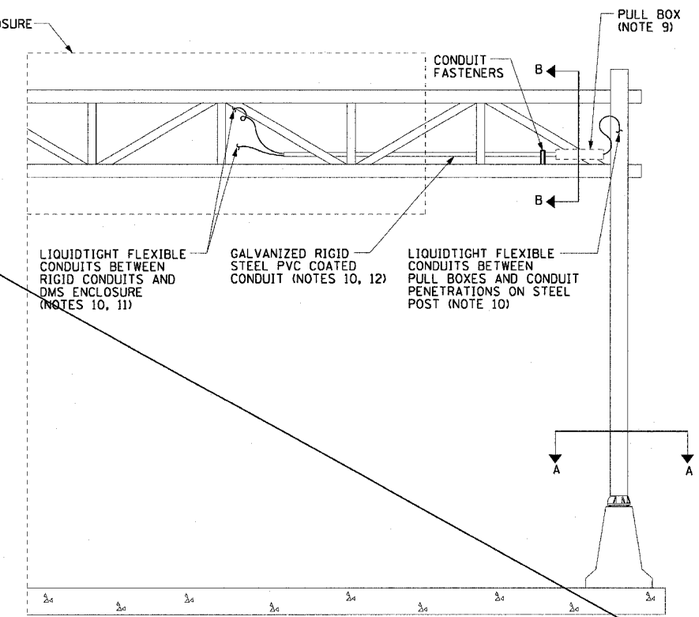

1 / DT-04 PARTIAL FRONT ELEVATION OF SIGN SUPPORT

DT-04

REVISIONS	
NAME	DATE
REVISED	1/21/05

ILLINOIS DEPARTMENT OF TRANSPORTATION
F.A.I. 90/94 (DAN RYAN EXPRESSWAY)
31st STREET TO I-57

DMS MOUNTING DETAILS FOR CANTILEVER SUPPORT

SCALE: NONE — DRAWN BY: BHP/HR
DATE: October 29, 2004 — CHECKED BY: BMW

CTE ENGINEERS
CONSOER TOWNSEND ENVIRODYNE ENGINEERS, INC.
303 EAST WACKER DRIVE, SUITE 600
CHICAGO ILLINOIS 60601-5212, PHONE: (312) 938-0300

Revised 2/11/05

m:\P40468\Elec\N9-IT-SS\M\Contract 2\DT020042.dgn
02/03/2005 05:45:47 PM