F.A.I. RTE.	SECTION	COUNTY	TOTAL SHEETS	SHEET NO.
94/90	2003-031I	COOK	976	853
STA.		TO STA.		
FED. ROAD DIST. NO.	ILLINOIS	FED. AID PROJECT		
62583				

(1) (2) #4/0, (1) #4/0 NEUTRAL & (1) #2 GND, 3" C
(2) (1) #3, (1) #3 NEUTRAL, & (1) #8 GND, 1" C
(3) (2) #8 & (1) #10 GND, ¾" C
(4) (2) #10 & (1) #12 GND, ¾" C
(5) (2) #12 & (1) #12 GND, ¾" C
(6) #6 GND WIRE, ¾" C
(7) #4/0, BARE COPPER GROUND
(8) QUANTITY & CONTROL WIRE SIZE PER MANUFACTURER'S RECOMMENDATION, ¾" RGS
(9) #8 BARE COPPER GROUND
(10) (3) #4/0, 3" C
(11) (1) #2 GND, 1" C

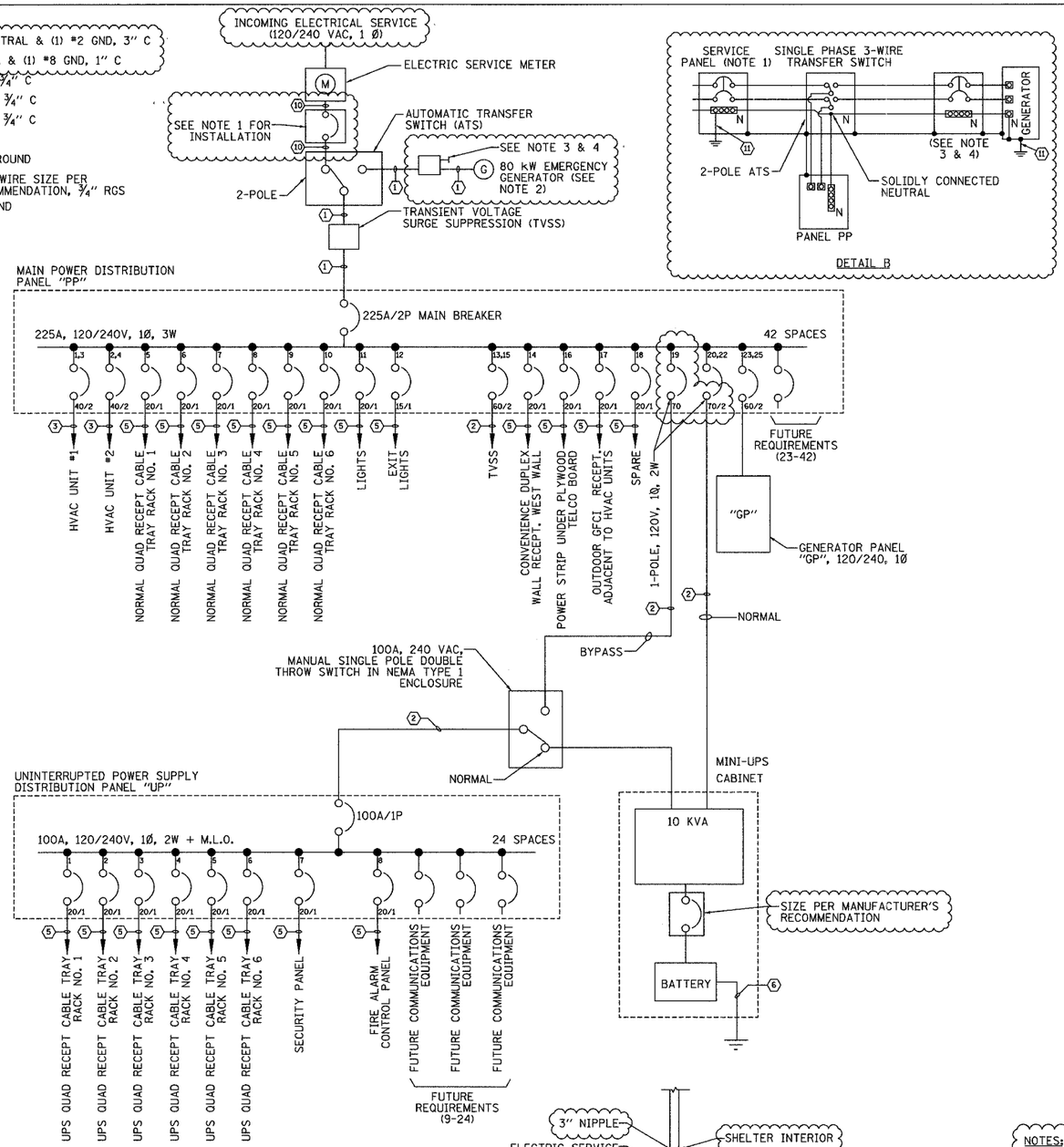

SINGLE LINE DIAGRAM
NOT TO SCALE

DETAIL B

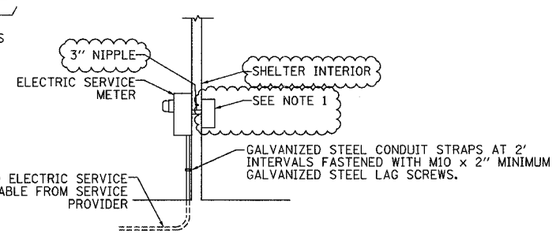

DETAIL A
NOT TO SCALE

PANEL CIRCUIT AND LOAD SCHEDULE

WIRE SIZE #3/0
1P, 225A

SERVICE : 120/240VAC, 1Ø, 3W
DESIGNATION : IDOT- SHELTER NORMAL POWER (PP)
LOCATION : I-55 SHELTER (R01)

LOAD DESCRIPTION	QTY	UNIT (W)	LOAD PER PHASE(KVA) PHASE A	PHASE B	TRIP	POLES	WIRE SIZE	WIRE SIZE	POLES	TRIP	LOAD PER PHASE(W) PHASE A	PHASE B	UNIT (W)	QTY	LOAD DESCRIPTION
HVAC UNIT 1 (36K BTU)	1	10300	5150	5150	40	2	6	6	2	40	5150	5150	10300	1	HVAC UNIT 2 (36K BTU)
NORMAL QUAD RECEPTACLE - RACK 1	1	900	900		20	1	12	12	1	20	900		900	1	NORMAL QUAD RECEPTACLE - RACK 2
NORMAL QUAD RECEPTACLE - RACK 3	1	900		900	20	1	12	12	1	20		900	900	1	NORMAL QUAD RECEPTACLE - RACK 4
NORMAL QUAD RECEPTACLE - RACK 5	1	900	900		20	1	12	12	1	20	900		900	1	NORMAL QUAD RECEPTACLE - RACK 6
LIGHTS	8	50		400	20	1	12	12	1	20		35	35	1	EXIT LIGHT
TVSS	1	N/A	—	—	60	2	4	12	1	20	900		180	5	DUPLEX RECEPTACLE
								12	1	20		900	180	5	RECEPTACLE- POWER STRIP
OUTDOOR GFCI RECEPTACLE	1	180	180		20	1	12		1	20					SPARE
UPS BYPASS (LOAD NOT INCLUDED IN TOTALS)					70	1	3	2	2	70	5000		10000	1	UPS INPUT (10 KVA)
SPARE					20	1						5000			
GENERATOR PANEL "GP"					60	2	6		1	20				1	SPARE
									1	20				1	SPARE
SPARE	1				20	1			1	20				1	SPARE
SPARE	1				20	1			1	20				1	SPARE
SPARE	1				20	1			1	20				1	SPARE
SPARE	1				20	1			1	20				1	SPARE
SPARE	1				20	1			1	20				1	SPARE
SPARE	1				20	1			1	20				1	SPARE
SPARE	1				20	1			1	20				1	SPARE
SPARE	1				20	1			1	20				1	SPARE
		SUBTOTAL LEFT	1980	6450							9850	8365	SUBTOTAL RIGHT		TOTAL LOAD:
											11830	15435	SUBTOTAL		27,265 W

VOLTAGE: 120/240V CYCLE: 60 Hz PHASE: 1 WIRES: 3
SOLID NEUTRAL: 225 AMPS
MAIN BREAKER: 225 AMP FRAME 225 AMP TRIP
MAIN LUGS: - AMPS MAIN COPPER BUS: 225 AMPS
MAINS: TOP [X] BOTTOM [ ]
S/N
GRD
MANUFACTURER:
TYPE AND CAT. NO. : ~~QO140M200~~
NO EQUAL: [X] APPROVED EQUAL: [ ]
MOUNTING: SURFACE: [X] FLUSH: [ ]

1. BOLT ON BRANCH BREAKERS
2. ALL COPPER CURRENT CARRYING PARTS
3. (ST) = SHUNT TRIP

PANEL CIRCUIT AND LOAD SCHEDULE

WIRE SIZE (2)
1P, 100A

SERVICE : 120/VAC, 1Ø
DESIGNATION : IDOT- SHELTER UPS POWER (UP)
LOCATION : I-55 SHELTER (R01)

LOAD DESCRIPTION	QTY	UNIT (W)	LOAD PER PHASE(KVA) PHASE A	TRIP	POLES	WIRE SIZE	WIRE SIZE	POLES	TRIP	LOAD PER PHASE(W) PHASE A	UNIT (W)	QTY	LOAD DESCRIPTION
UPS QUAD RECEPTACLE - CAB 1	1	900	900	20	1	12	12	1	20	900	900	1	UPS QUAD RECEPTACLE - CAB 2
UPS QUAD RECEPTACLE - CAB 3	1	900	900	20	1	12	12	1	20	900	900	1	UPS QUAD RECEPTACLE - CAB 4
UPS QUAD RECEPTACLE - CAB 5	1	900	900	20	1	12	12	1	20	900	900	1	UPS QUAD RECEPTACLE - CAB 6
SECURITY PANEL	1	260	260	20	1	12	12	1	20	260	260	1	FIRE ALARM CONTROL PANEL
SPARE	1			20	1			1	20			1	SPARE
SPARE	1			20	1			1	20			1	SPARE
SPARE	1			20	1			1	20			1	SPARE
SPARE	1			20	1			1	20			1	SPARE
SPARE	1			20	1			1	20			1	SPARE
SPARE	1			20	1			1	20			1	SPARE
SPARE	1			20	1			1	20			1	SPARE
SPARE	1			20	1			1	20			1	SPARE
		SUBTOTAL LEFT	1800	1160						1800	1160	SUBTOTAL RIGHT	TOTAL LOAD:
										3600	2320	SUBTOTAL	5,920 W

VOLTAGE: 120/240V CYCLE: 60 Hz PHASE: 1 WIRES: 2
SOLID NEUTRAL: 100 AMPS
MAIN BREAKER: 100 AMP FRAME 100 AMP TRIP
MAIN LUGS: - AMPS MAIN COPPER BUS: 100 AMPS
MAINS: TOP [X] BOTTOM [ ]
S/N
GRD
MANUFACTURER:
TYPE AND CAT. NO. : ~~QO140M200~~
NO EQUAL: [X] APPROVED EQUAL: [ ]
MOUNTING: SURFACE: [X] FLUSH: [ ]

1. BOLT ON BRANCH BREAKERS
2. ALL COPPER CURRENT CARRYING PARTS

COMM-87

NOTES:
1. INSTALL NEW 225 AMP MAIN CIRCUIT BREAKER DISCONNECT SWITCH WITH NEUTRAL AND GROUND BUS IN NEMA 1 ENCLOSURE.
2. PACKAGED STANDBY GENERATOR AND TRANSFER SWITCH, INSTALLATION ONLY.
3. INSTALL NEW 225 AMP CIRCUIT BREAKER DISCONNECT SWITCH WITH NEUTRAL AND GROUND BUS IN NEMA TYPE 3R ENCLOSURE.
4. MOUNT NEMA 3R DISCONNECT SWITCH TO STRUCTURAL FRAME OF GENERATOR. NOTE: DESIGNATED WORK SHALL BE PAID FOR AS PART OF COMMUNICATION SHELTER.
5. ALL CONDUIT SHALL BE RIGID GALVANIZED STEEL UNLESS OTHERWISE NOTED.
6. ALL WIRE SHALL BE TYPE THWN UNLESS OTHERWISE NOTED.

REVISIONS	
NAME	DATE
REVISION 1	12/17/04

ILLINOIS DEPARTMENT OF TRANSPORTATION
F.A.I. 94/90 (DAN RYAN EXPRESSWAY)
31st STREET to I-57
I-55 SHELTER (R01)
POWER SINGLE LINE DIAGRAM

SCALE: NOT TO SCALE DRAWN BY: JM
DATE: October 29, 2004 CHECKED BY: CS

Edwards AND Kelcey
ONE NORTH FRANKLIN
CHICAGO, IL 60606
PHONE: (312) 251-3000
FAX: (312) 251-3015
WEB: WWW.EKCORP.COM

P:\0300\8035\fs\cadd\c\02092sslt
12/15/2004 01:51:28 PM