SECTION	COUNTY	TOTAL SHEETS	SHEET NO.
2003-031I	COOK	976	133

STA. TO STA.

FED. ROAD DIST. NO. 1 | ILLINOIS | FED. AID PROJECT

62583

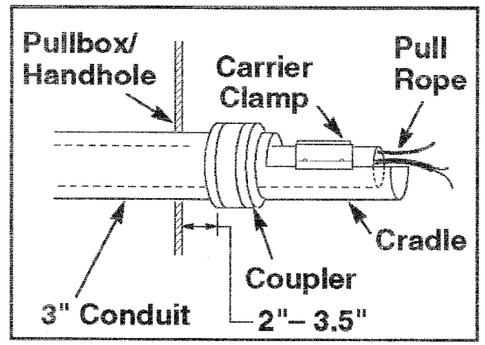

PROBE/CARRIER INSTALLATION DETAIL

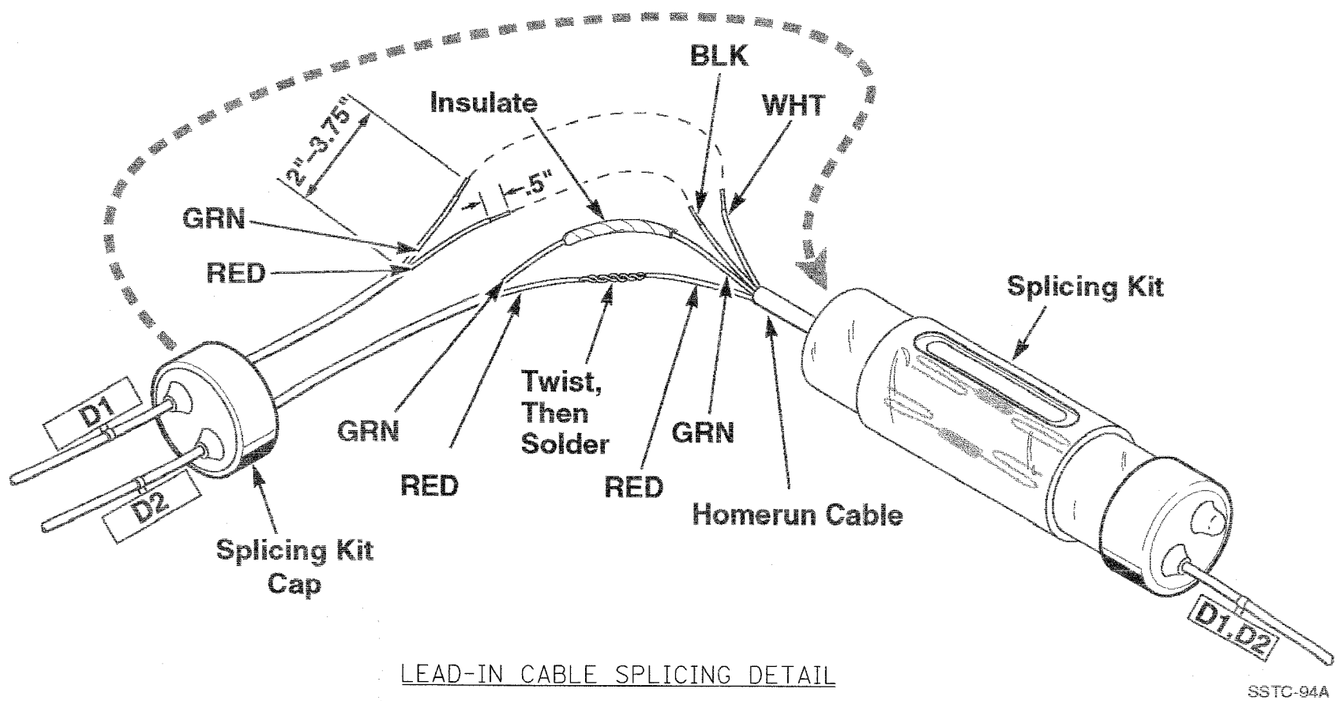

LEAD-IN CABLE SPLICING DETAIL

NOTES:

1. ALL SPLICES MUST BE SOLDERED, INSULATED, AND WATERPROOFED.
2. EACH PROBE LEAD-IN SHALL BE TAGGED WITH A PERMANENT IDENTIFICATION TAG WITH THE CORRECT NOMENCLATURE.
3. FOR MICROLOOP SPLICING DETAIL, SEE SHEETS DT 23 - 27.

DT-28

Edwards AND Kelcey
ONE NORTH FRANKLIN
CHICAGO, IL 60606
PHONE: (312) 251-3000
FAX: (312) 251-3015
WEB: WWW.EXCORP.COM

REVISIONS	
NAME	DATE

ILLINOIS DEPARTMENT OF TRANSPORTATION

F.A.I. 94/90 (DAN RYAN EXPRESSWAY)
31st STREET to I-57

TYPICAL MAGNETO-INDUCTIVE VEHICLE SENSOR (MICROLOOP) INSTALLATION DETAIL

SCALE: NTS | DRAWN BY: NB

DATE: October 29, 2004 | CHECKED BY: CTC

P:\03009\035\IT\SCADD\DT02027E.SHT

10/15/2004 08:6:56 AM