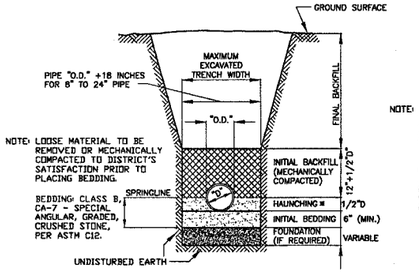

CLAY, RCP & DIP PIPE BEDDING DETAIL

*HAUNCHING TO BE WELL-TAMPED ALONG PIPE TO INSURE VOIDS ARE ELIMINATED

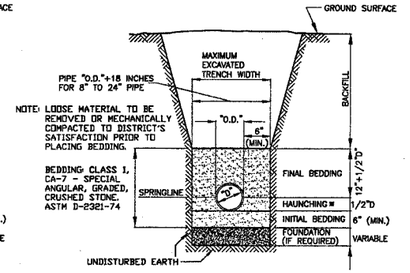

PVC PIPE BEDDING DETAIL

*HAUNCHING TO BE WELL-TAMPED ALONG PIPE TO INSURE VOIDS ARE ELIMINATED

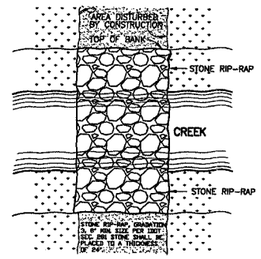

STONE RIP-RAP DETAIL

TYPICAL

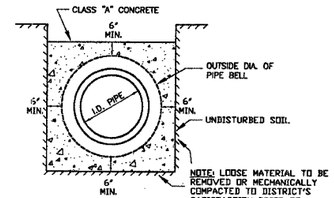

ENCASEMENT DETAIL

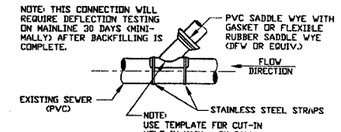

CUT-IN CONNECTION DETAIL (PVC PIPE)

SEE SERVICE & SERVICE CLEANOUT RISER DETAIL

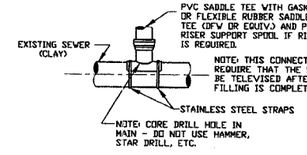

CUT-IN CONNECTION DETAIL (CLAY PIPE)

SEE SERVICE & SERVICE CLEANOUT RISER DETAIL

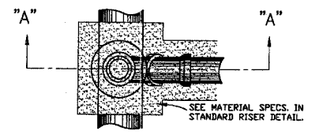

PLAN VIEW (RISER DETAIL)

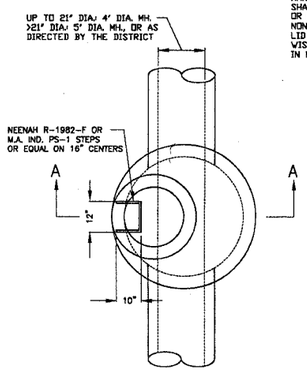

MANHOLE DETAIL - PLAN

NOTE:
THE MINIMUM ALLOWABLE MANHOLE SIZE WILL DEPEND UPON THE ANGULAR RELATIONSHIP BETWEEN PIPES ENTERING/EXITING THE MANHOLE. IN GENERAL, THE ALLOWABLE MANHOLE SIZES SHALL BE AS FOLLOWS:
4' DIA. - FOR PIPE SIZES 8"- 21" DIA.
5' DIA. - FOR PIPE SIZES GREATER THAN 21" DIA. (OR AS DIRECTED BY THE DISTRICT)

NOTE: THE MAXIMUM DROP FROM THE FLOWLINE OF ANY PIPE IN A MANHOLE TO THE BENCH UNDER THAT PIPE SHALL BE 8'. THIS INCLUDES STANDARD MANHOLES, DROP MANHOLES, AND MANHOLES CONSTRUCTED OVER EXISTING SEWERS.

NOTE: THE CONTRACTOR SHALL TAKE EXTREME CARE TO BACKFILL AND COMPACT BACKFILL IN MANHOLE EXCAVATION SUCH THAT IT MEETS R.R.W.R.D. DENSITY REQUIREMENTS.

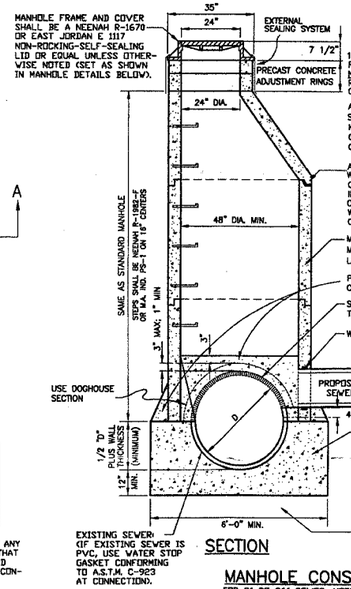

SECTION

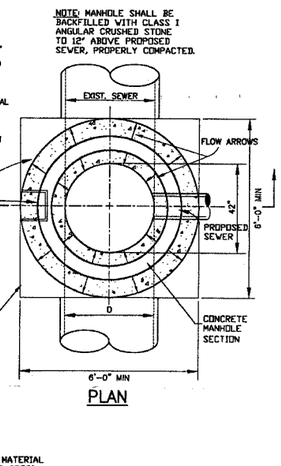

PLAN

MANHOLE CONSTRUCTED OVER EXISTING SEWER

FOR 8" TO 36" SEWER, NOTES FOR SANITARY MANHOLE AND SANITARY DROP MANHOLE APPLY. FOR LARGER SEWER CONTACT THE DISTRICT.

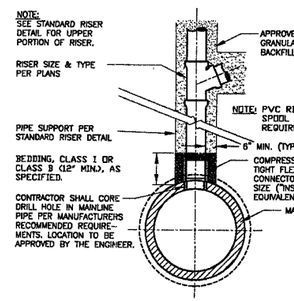

SERVICE CONNECTION FOR PVC TRUNK SEWER

FOR PIPE 18" IN DIA. OR LARGER

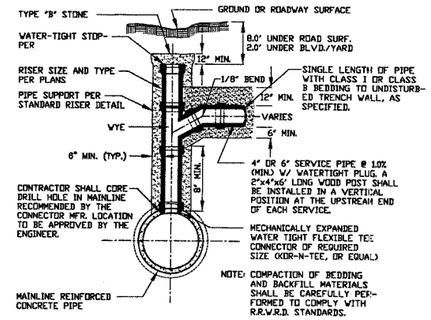

SERVICE CONNECTION DETAIL FOR RCP

NO SCALE

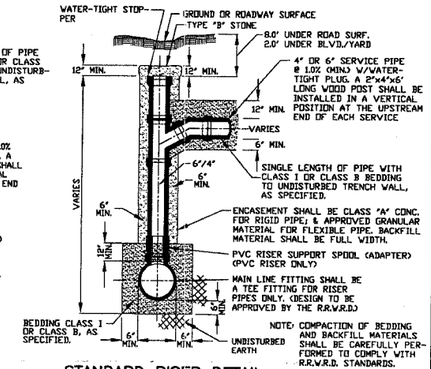

STANDARD RISER DETAIL

SECTION A-A

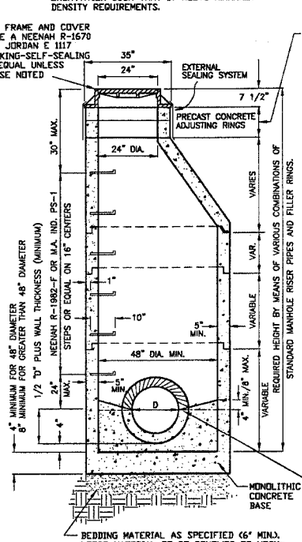

SANITARY MANHOLE DETAIL

SECTION A-A

12" MAX., ONLY (1) - 2" ADJUSTMENT RING PER MANHOLE
NOTE: 4" ADJUSTMENT RING NOT REQUIRED IN TURF AREA OR CURB AND GUTTER ROADWAYS

NOTES:

ALL ADJUSTMENT RING JOINTS SHALL BE SEALED WITH (2) 1" BEADS OF E-Z STIK, KENT SEAL OR EQUIVALENT, INNER AND OUTER, INCLUDING CAST IRON FRAME TO CONCRETE MANHOLE STRUCTURE.

ALL BARREL JOINTS SHALL BE SEALED WITH 3 1/2"x 3/8" E-Z STIK, KENT SEAL OR EQUIVALENT ON THE SHIP LAP. IN WET AREAS AN ADDITIONAL 1" BEAD OF E-Z STIK, KENT SEAL OR EQUIVALENT WILL BE REQUIRED ON THE FLAT PORTION OF THE SHIP LAP.

MANHOLE STRUCTURE TO BE CONSTRUCTED OF PRE-CAST REINFORCED CONCRETE MANHOLE RISER PIPE. MANHOLE CONSTRUCTION SHALL CONFORM TO A.S.T.M. C478-90 OR LATEST DESIGNATION.

WHEN A CASTING REQUIRES PITCHING, A MINIMUM OF THREE SHIMS (PLASTIC OR METAL) EQUALLY SPACED TO PREVENT ROCKING SHALL BE INSTALLED BETWEEN THE CASTING AND THE MASONRY. HYDRAULIC CEMENT SHALL BE PLACED TO FILL THE SPACE BETWEEN THE CASTING & MASONRY.

60" I.D. MANHOLE WALLS SHALL BE 6" (MIN.) THICK.

PRE-CAST FLAT TOPS WILL NOT BE PERMITTED IN DISTRICT MANHOLES

PIPE CONNECTION TO PROPOSED MANHOLE SHALL BE MADE WATER-TIGHT BY MEANS OF RUBBER GASKET SEAL (A-LOK OR EQUAL), CONFORMING TO A.S.T.M. F-477, CAST INTEGRALLY IN MANHOLE WALL OR RUBBER GASKET SEAL AND STAINLESS STEEL CLAMP CONFORMING TO A.S.T.M. C-923.

PIPE CONNECTION TO EXISTING MANHOLE SHALL BE MADE WATER-TIGHT BY MEANS OF RUBBER GASKET SEAL AND STAINLESS STEEL CLAMP, CONFORMING TO A.S.T.M. C-923, PSX SERIES SIX OR EQUAL. PIPE ACCESS SHALL BE MADE BY CORE DRILLING MANHOLE WALL.

MANHOLE FRAME AND COVER SHALL BE A NEENAH R-1670 OR EAST JORDAN E 1117 NON-ROCKING-SELF-SEALING LID OR EQUAL UNLESS OTHERWISE NOTED

NOTE: MANHOLES LOCATED OUTSIDE PUBLIC RIGHT-OF-WAY MUST BE MARKED WITH A METAL FENCE POST

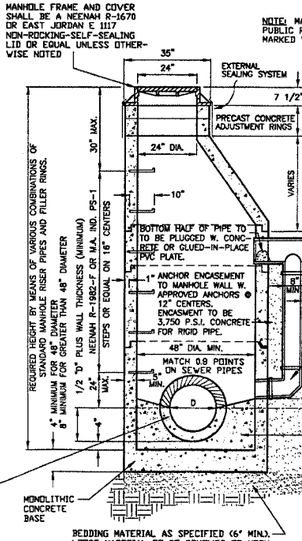

SANITARY DROP MANHOLE DETAIL

SECTION A-A

NOTE: OPENINGS IN MANHOLE WALL SHALL BE 6" (MIN.) FROM ANY JOINT.

FOR INCOMING SEWER SMALLER THAN 12" USE VERTICAL PIPE OF SAME DIAMETER. FOR INCOMING SEWER 12" OR GREATER, USE 12" VERTICAL PIPE.

CAST-IN-PLACE CLASS "A" CONCRETE OR PRECAST PER THIS DESIGN.

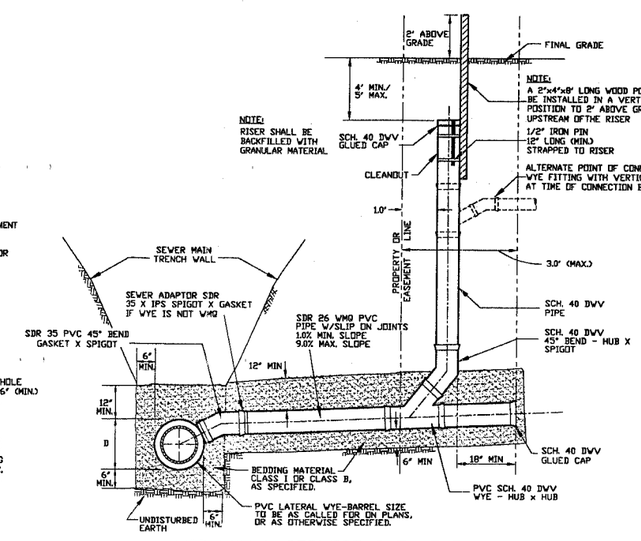

SERVICE & SERVICE CLEANOUT RISER

NO SCALE

NOTE: SANITARY SERVICES REQUIRED TO EXTEND MAX. 3' BEYOND R.O.W. LINE

ALL SCHEDULE 40 PVC PIPE AND FITTINGS SHALL MEET THE REQUIREMENTS OF ASTM D2665. ALL WMQ SDR 26 PVC PIPE AND FITTINGS SHALL MEET THE REQUIREMENTS OF ASTM D2241 AND D3139.
ALL DWV FITTINGS SHALL BE CLEANED, PRIMED AND GLUED.

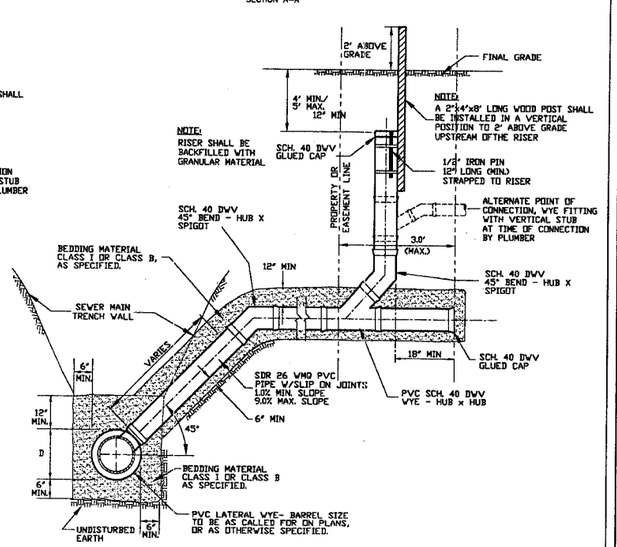

ALTERNATE SERVICE RISER DETAIL (WITH SERVICE CLEANOUT)

NO SCALE

NOTE: SANITARY SERVICES REQUIRED TO EXTEND MAX. 3' BEYOND R.O.W. LINE

ALL SCHEDULE 40 PVC PIPE AND FITTINGS SHALL MEET THE REQUIREMENTS OF ASTM D2665. ALL WMQ SDR 26 PVC PIPE AND FITTINGS SHALL MEET THE REQUIREMENTS OF ASTM D2241 AND D3139.
ALL DWV FITTINGS SHALL BE CLEANED, PRIMED AND GLUED.

ROCK RIVER WATER RECLAMATION DISTRICT
3333 KISHWAUKEE ST., P.O. BOX 7480, ROCKFORD, ILLINOIS 61126-7480 - PH. (815) 387-7660/FAX (815) 387-7665

REV.: 1/1/97 PAD REV.: 3/5/00 PAD REV.: 5/14/03 PAD
REV.: 2/7/97 PAD REV.: 1/10/01 PAD REV.: 2/2/04 PAD
REV.: 3/19/98 PAD REV.: 2/5/02 PAD

STANDARD DETAIL SHEET

PLOT SCALE: 1"=50'

FILE: RRWRD.DWG

64A38
28/22

ROUTE NO.	SEC.	CONTRACT # 64A38	
F.A.P. 303			
CONTRACT SECTION NO.		COUNTY	
T140C5(1)S-3	WINNEBAGO		
R.R.W.R.D. PROJECT		TOTAL SHEETS	SHEET NO.
		28	22