FAP ROUTE	SECTION	COUNTY	TOTAL SHEETS	SHEET NO
604	102TS	MADISON	37	5
STA.		TO STA.		
CONTRACT NO.: 76798				

TYPICAL SECTION

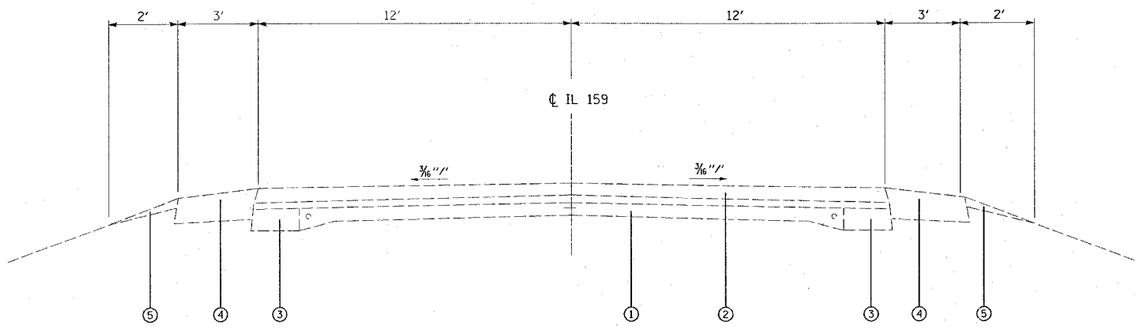

STA. 457+90.00 TO 465+50.00
EXISTING

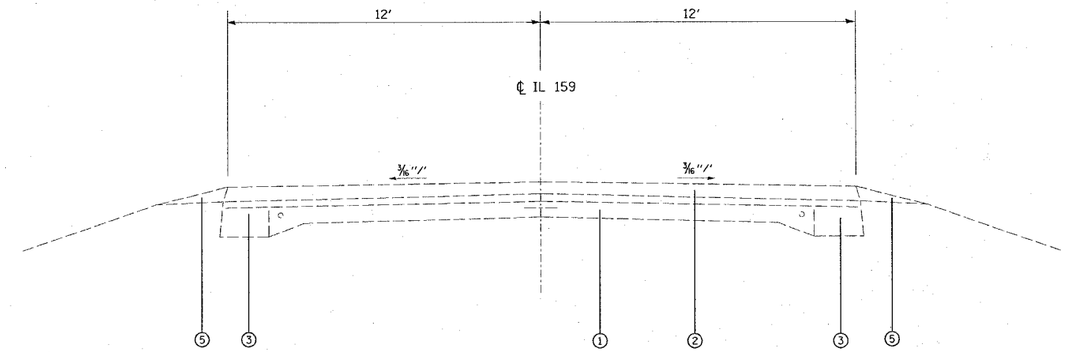

STA. 465+50.00 TO 470+70.00
EXISTING

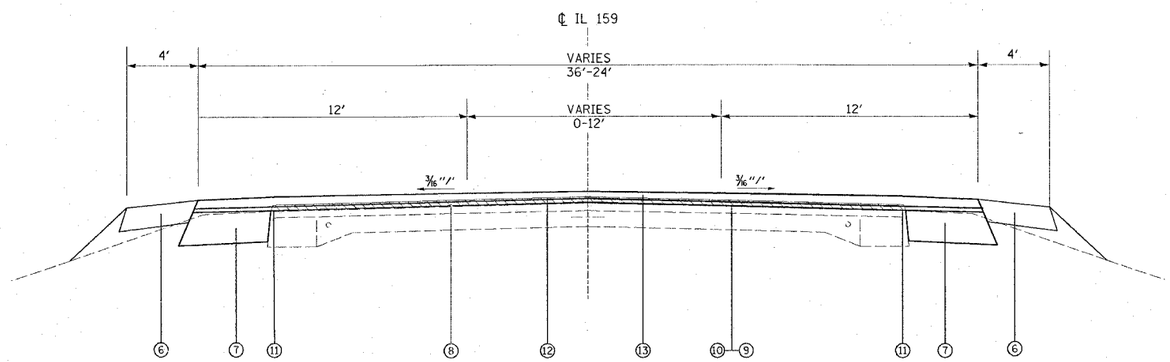

STA. 457+90.00 TO 470+70.00
PROPOSED

LEGEND

1. EXISTING PAVEMENT 9-6-9
2. EXISTING BITUMINOUS CONCRETE SURFACE COURSE,
3. EXISTING BITUMINOUS CONCRETE BASE COURSE WIDENING 11″
4. EXISTING BITUMINOUS SHOULDER TO BE REMOVED
5. EXISTING AGGREGATE SHOULDER
6. PROPOSED BITUMINOUS SHOULDERS 8″
7. PROPOSED BITUMINOUS BASE COURSE WIDENING 10¾″
8. PROPOSED BITUMINOUS SURFACE REMOVAL ½″
9. PROPOSED AGGREGATE (PRIME COAT)
10. PROPOSED BITUMINOUS MATERIALS (PRIME COAT)
11. PROPOSED STRIP REFLECTIVE CRACK CONTROL TREATMENT
12. PROPOSED LEVELING BINDER (MACHINE METHOD)
13. PROPOSED POLYMERIZED BITUMINOUS CONCRETE SURFACE, SUPERPAVE

NOTE:
STA. 457+90.00 TO STA. 463+03.17 & STA. 465+16.50 TO STA. 470+70.00
THE PROPOSED BITUMINOUS CONCRETE SURFACE SUPER PAVE THICKNESS IS 2.25″

STA. 467+53.17 TO STA. 465+82.40 THE PROPOSED BITUMINOUS CONCRETE SURFACE
SUPER PAVE THICKNESS IS 3″

SEE TRANSITION DETAIL ON PAGE 24

REVISIONS	
NAME	DATE

ILLINOIS DEPARTMENT OF TRANSPORTATION
TYPICAL SECTIONS
IL 159
FAP ROUTE 604
SECTION 102TS
MADISON COUNTY

DRAWN BY:

PLOT DATE: 1/27/2005

PLAN	SURVEYED	BY	DATE
	PLOTTED		
	ALIGNMENT DELINEED		
NOTE BOOK	R/L OF WAY CHECKED		
NO.	CADD FILE NAME		

$$DATE$$
1/27/2005
e:\projects\ed05904\plan\pln405904s.dgn
$$USER$$
$$REF-$$