STATE OF ILLINOIS
DEPARTMENT OF TRANSPORTATION

ROUTE NO.	SECTION	COUNTY	TOTAL SHEETS	SHEET NO.
55,80	*	WILL	497	294
FED. ROAD DIST. NO. 1	ILLINOIS	FED. AID PROJECT-		

* 99-IK,BYBAC-B)

#80906

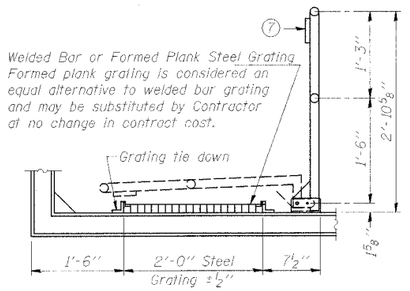

SIDE ELEVATION

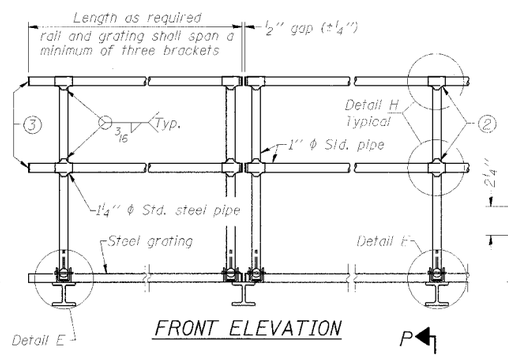

FRONT ELEVATION

DETAIL D HANDRAIL

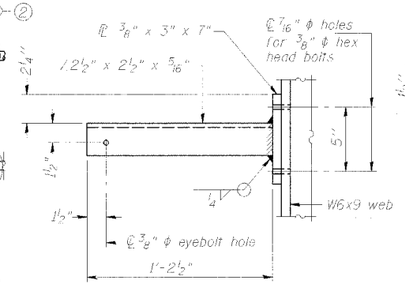

SECTION P-P

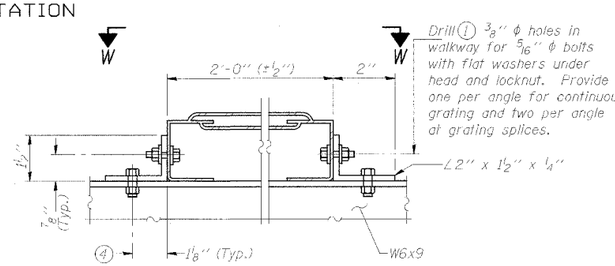

ALTERNATE FORMED PLANK GRATING DETAILS

Plank Grating: nominal depth = 2½" (±½"); perforated or expanded steel sheet with a non-skid surface (non-serrated) concentrated load capacity = 500 lbs. with 6'-0" clear span.

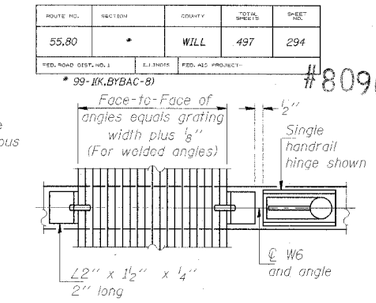

(WALKWAY GRATING CONTINUOUS)

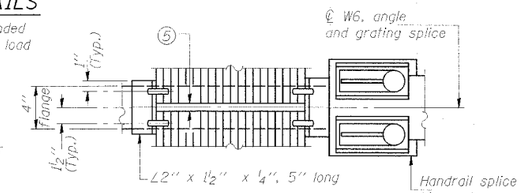

(AT WALKWAY GRATING SPLICE)
PLAN
(Showing welded angles (4))

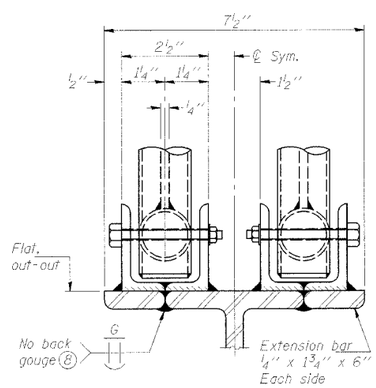

ELEVATION AT HANDRAIL JOINT
(Details not shown same as "FRONT ELEVATION")

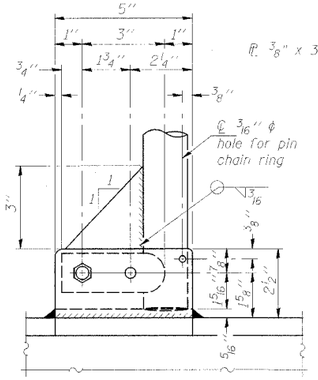

SIDE ELEVATION

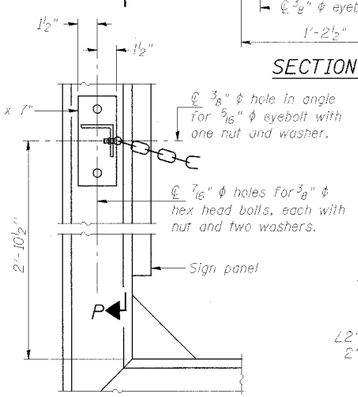

SAFETY CHAIN ATTACHMENT
(With Sign Present)
Items not shown same as "SIDE ELEVATION" and "SAFETY CHAIN"

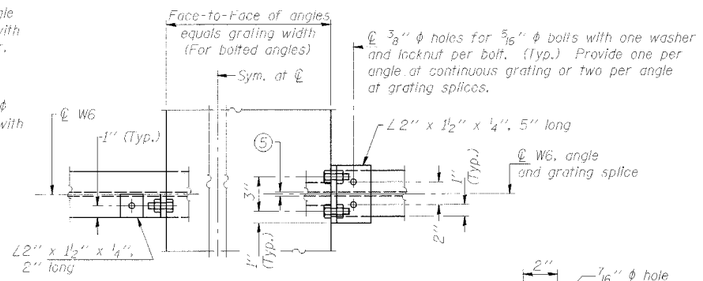

GRATING CONTINUOUS AT GRATING SPLICE
VIEW W-W
(Showing bolted angles (4))

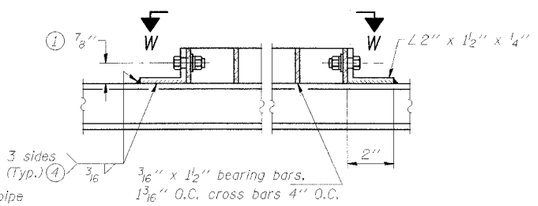

WELDED BAR GRATING DETAILS
(Showing optional welded angle attachment (4))

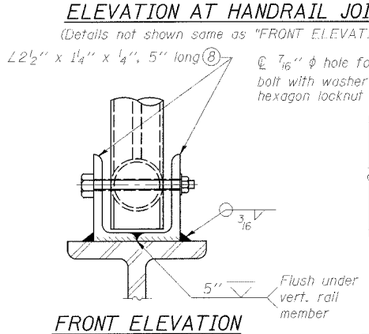

FRONT ELEVATION
(See above Elevations for dimensions.)

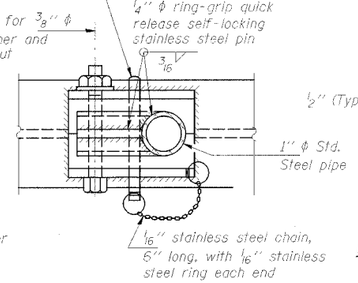

PLAN AT SINGLE HANDRAIL HINGE
DETAIL E

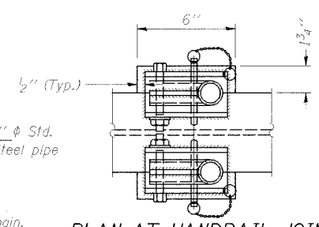

PLAN AT HANDRAIL JOINT
(For Details, see Elevations.)

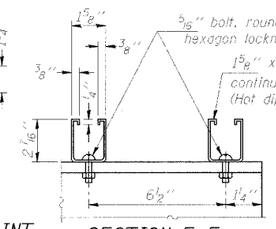

SECTION F-F
LIGHTING FIXTURE MOUNTS
(If required)

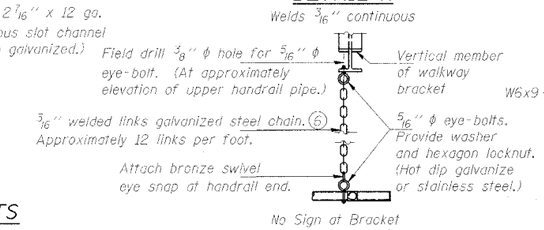

SAFETY CHAIN
One (1) required for each end of each walkway.

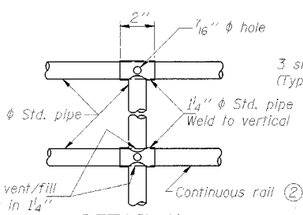

DETAIL H
Welds 3/16" continuous

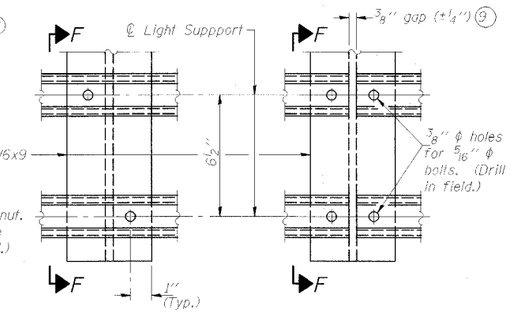

DETAIL F
DETAIL G

SGN-42

NUMBER	REVISION	DATE

DESIGNED	SL
CHECKED	AS
DRAWN	RV
CHECKED	AS

19
EXAMINED
ENGINEER OF STRUCTURAL SERVICES
PASSED
ENGINEER OF BRIDGES AND STRUCTURES

BM-4 11/1/2002

NOTES

(1) Drilling holes in grating may be done in shop or field, based on Contractor's preference and subject to accurate alignment.

(2) Horizontal rail member shall be continuous thru 1¼" ϕ pipe. Provide 7/16" ϕ hole in fitting for ⅜" ϕ bolt. Field drill 7/16" ϕ hole in horizontal rail member. Provide washer and locknut for bolt. (Use 5/16" eyebolts in 7/16" ϕ holes on top rail at ends only.)

(3) Install standard force-fit end caps or weld ⅛" end plates with ⅛" c.f.w. and grind smooth. (All rail ends.)

(4) Grating tie-down angles may be either bolted to W6x9 after galvanizing or welded to W6x9 before galvanizing, at the Contractor's option. (No weld on grating side.)

(5) ⅜" (±¼") gap between grating panels at splice.

(6) Chain to be hot dip galvanized after manufacture and suitable for prolonged exterior exposure. Alternate materials may be substituted with the Engineer's approval. Approximately 3'-6" long chain per location. Maximum sag with handrail erected = 4".

(7) PL ⅛" x ½" x 2" welded to handrail posts to protect locations that contact grating.

(8) Extrusions may be used in lieu of details shown, with approval by Engineer.

(9) Field cut ends of light support channels shall be free of burrs or hazardous projections and coated with zinc-rich primer or equivalent.

BRIDGE MOUNT SIGN STRUCTURES
WALKWAY DETAILS

ILLINOIS DEPARTMENT OF TRANSPORTATION
F.A.I. 80 & F.A.I. 55 INTERCHANGE

OVERHEAD SIGN STRUCTURES
(BRIDGE MOUNTED)