F.A.I. RTE.	SECTION	COUNTY	TOTAL SHEETS	SHEET NO.
80	99-1(K,BY&AC-B)	COOK	497	311
STA.		TO STA.		
FED. ROAD DIST. NO.	ILLINOIS	FED. AID PROJECT		

Sheet S-12 of S-21

CONTRACT 80906

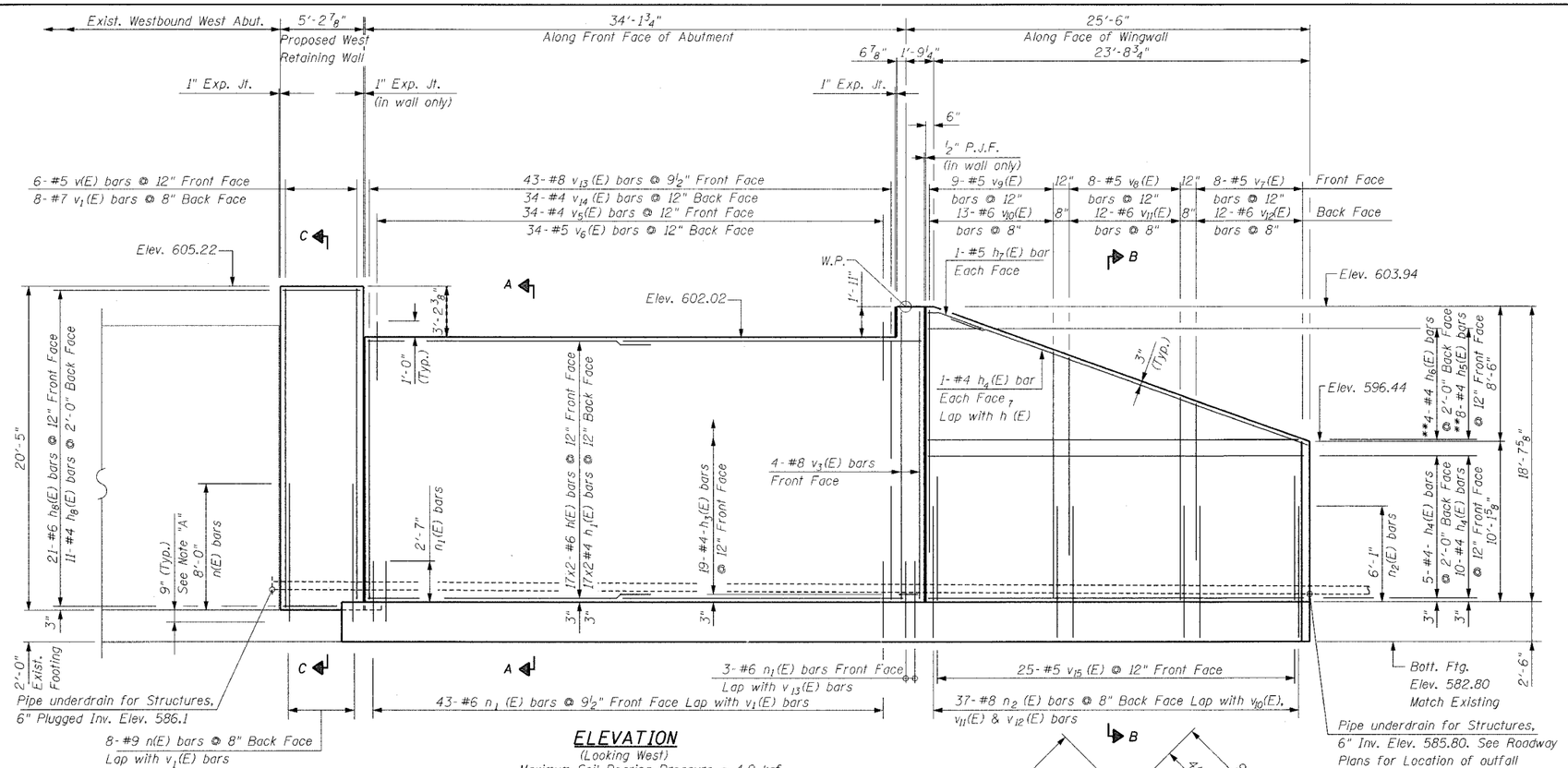

ELEVATION

(Looking West)

Maximum Soil Bearing Pressure = 4.0 ksf

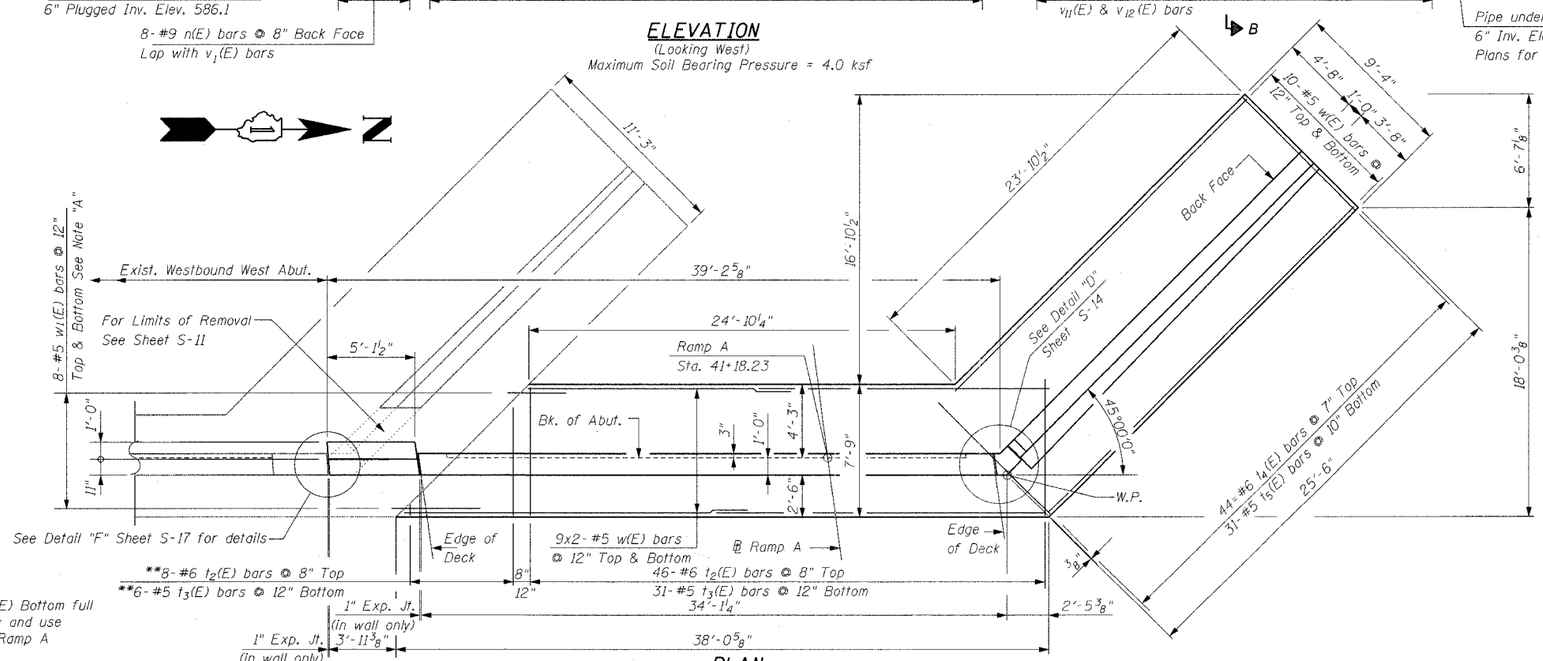

PLAN

** Order t_2(E) Top & t_3(E) Bottom full length. Cut to fit skew and use remainder of bars in Ramp A East Abutment.

Note "A":
Epoxy grout n_1(E) and w(E) bars in 9" minimum drilled holes according to Section 584 of Standard Specifications.

Clarke Group, Inc.
CONSULTING ENGINEERS
8607 NORTH CUMBERLAND AVENUE :: CHICAGO, ILLINOIS 60656 :: (773) 775-4009

REVISIONS	
NAME	DATE

ILLINOIS DEPARTMENT OF TRANSPORTATION
RAMP A WEST ABUTMENT
FAI-80 OVER WEST FRONTAGE ROAD
FAI-80 SECTION 99-1 (K,BY & AC-B)
WILL COUNTY
FAI-80 STA. 1931+99.35
STRUCTURE NO. 099-0042, 099-0043, 099-0308

SCALE: NONE — DRAWN BY IMG
DATE: OCTOBER 2004 — CHECKED BY GDW

DATE: 1/2/2005
FILENAME: n:\proj\2890\2890-02\design\structural\2890-02-s-12-ramp-a-w-abut.dgn