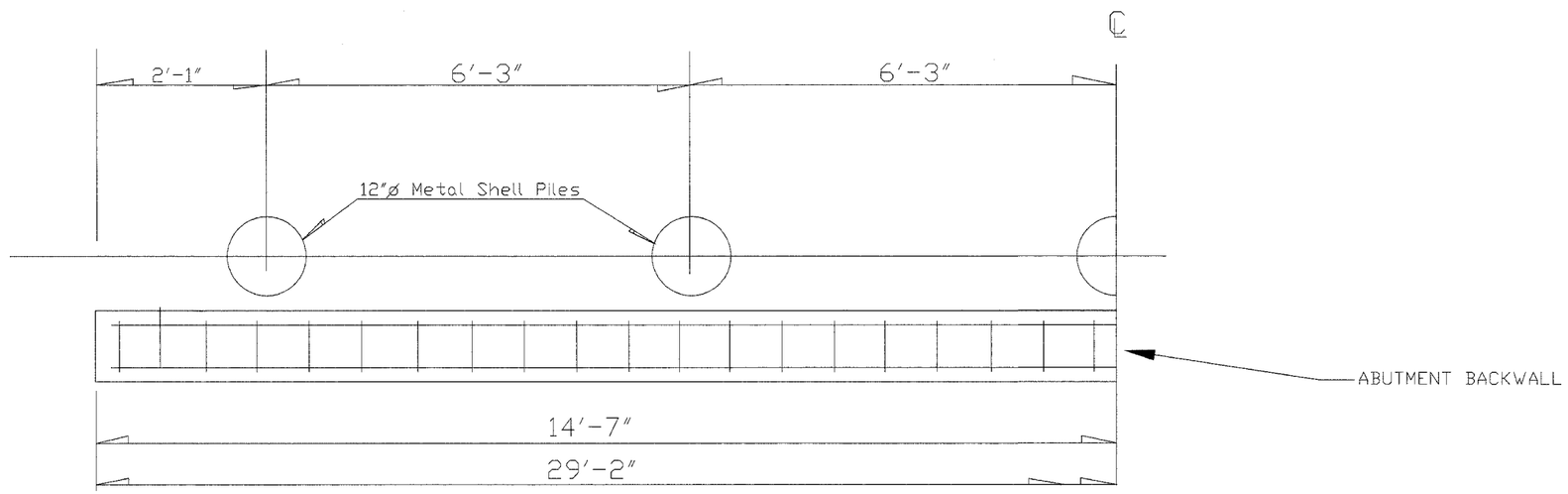

HALF SECTION
THROUGH BOTH ABUTMENTS

PILING LAYOUT
SEC. 03-00284-00-BR
BUILT 2005, LEE COUNTY
STA. 10+00, THREE MILE BRANCH