RTE.	SECTION	COUNTY	TOTAL SHEETS	SHEET NO.
FAI80	(50-2)HBR	LA SALLE	460	127
STA.		TO STA.		
FED. ROAD DIST. NO. 7		ILLINOIS	FED. AID PROJECT	

CONTRACT NO. 86603

GENERAL NOTES

1. THE 10:1 SLOPE CONTROLS NOSE OF ATTENUATOR BASE ELEVATION.
2. ATTENUATOR BASE GRADE PARALLELS EDGE OF PAVEMENT GRADE.
3. SLOPE ADJACENT TO ATTENUATOR BASE SHALL BE 10:1 OR FLATTER.

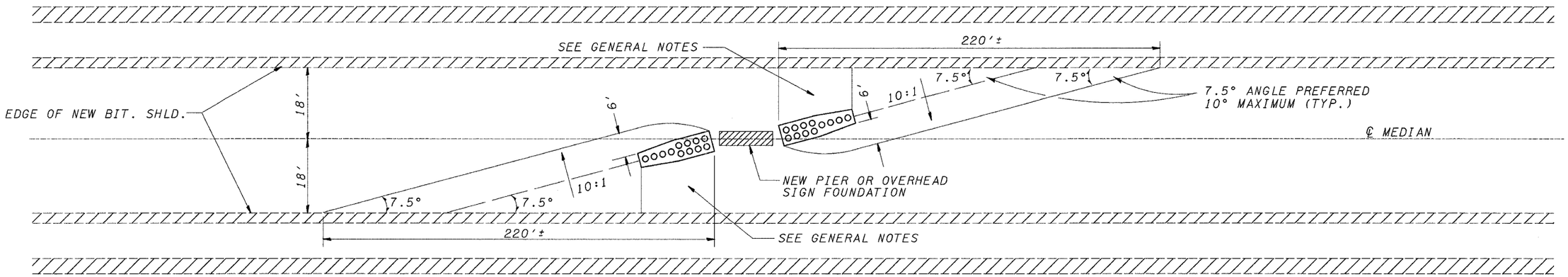

IMPACT ATTENUATOR LAYOUT AND GRADING PLAN

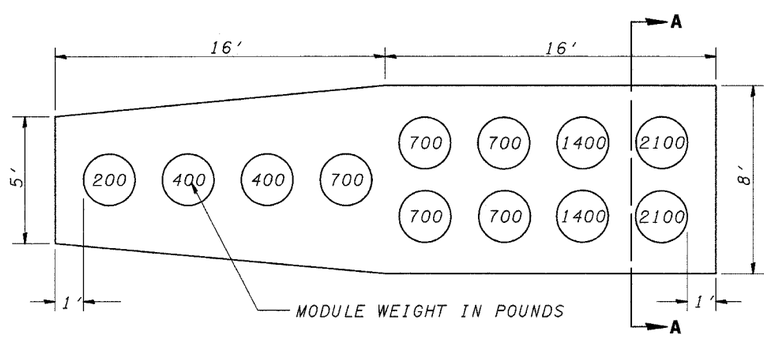

NOTE: MODULE WEIGHTS, NUMBER, AND LAYOUT VARY BY SYSTEM. FOLLOW MANUFACTURER'S SPECIFICATIONS FOR INSTALLATION.

IMPACT ATTENUATOR ARRAY AND ATTENUATOR BASE PLAN

FOR USE AT PERMANENT LOCATIONS. (SEE STAGE CONSTRUCTION SHEETS FOR TEMPORARY INSTALLATIONS)

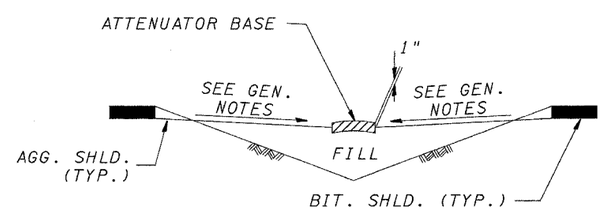

SECTION A – A

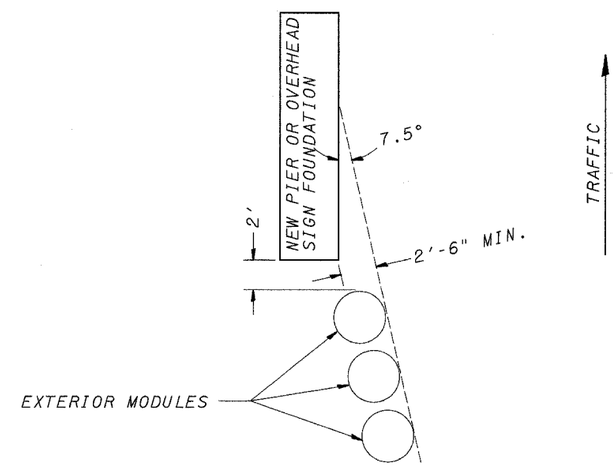

EXTERIOR MODULE LAYOUT

ESTIMATED BILL OF MATERIALS (FOR ONE)		
ITEM	UNIT	QUANTITY
IMPACT ATTENUATOR MODULES	EACH	12
ATTENUATOR BASE	SQ. YD.	25.8

NOTE: INSTALLATION, AS SHOWN, IS PAID FOR AS "IMPACT ATTENUATORS (NON-REDIRECTIVE), TEST LEVEL 3."

REVISIONS NAME	

ILLINOIS DEPARTMENT OF TRANSPORTATION

IMPACT ATTENUATOR INSTALLATION DETAILS

F.A.I. 80 AT ILLINOIS ROUTE 351

SCALE: NONE DRAWN BY: JDK
DATE: 09/04 CHECKED BY: MTD