F.A.U. RTE.	SECTION	COUNTY	TOTAL SHEETS	SHEET NO.
6108	(70X)N & TS-1	LA SALLE	460	336
STA. 149+00		TO STA. 154+00		
FED. ROAD DIST. NO.	ILLINOIS	FED. AID PROJECT		

CONTRACT NO. 86603

FOR INFORMATION ONLY

0 20 40
SCALE IN FEET

ADJUST WATER SERVICE LINES

STATION	OFFSET	STORM SEWER DIAMETER (INCH)	ADJUSTING WATER SERVICE LINES (FOOT)
256+04	45' LT.	21	9
259+91	45' LT.	24	9
TOTAL			18

ADJUSTING WATER MAIN SCHEDULE

STATION	OFFSET	STORM SEWER DIAMETER (FOOT)	STORM SEWER FLOWLINE ELEVATION (FOOT)	WATERMAIN CROWN ELEVATION (FOOT)	ADJUSTING WATER MAIN 10" (FOOT)	ADJUSTING WATER MAIN 12" (FOOT)
250+00	16' LT.	12	633.21	631.75		32
251+00	16' LT.	12	633.91	631.63		32
251+86	16' LT.	12	633.63	631.57		32
253+80	17' LT.	12	632.45	631.47		32
254+30	17' LT.	12	632.36	631.43		32
254+80	17 LT.	12	632.40	631.49		32
256+14	18' LT.	12	631.33	631.31		32
256+96	18' LT.	12	631.88	631.19		32
257+71	18' LT.	12	630.74	631.41		32
258+53	19' LT.	12	630.70	631.77		32
259+14	19' LT.	12	630.29	632.03		32
259+86	18' LT.	12	630.51	632.32		32
261+46	42' RT.	12	630.30	632.36	32	
261+60	28' LT.	30	626.62	633.21		34
261+95	62' LT.	12	635.36	632.92		32
CIVIC ROAD						
51+72	33' RT.	36	625.61	630.90	34	
54+36	23' LT.	15	631.58	629.04	32	
TOTAL					98	450

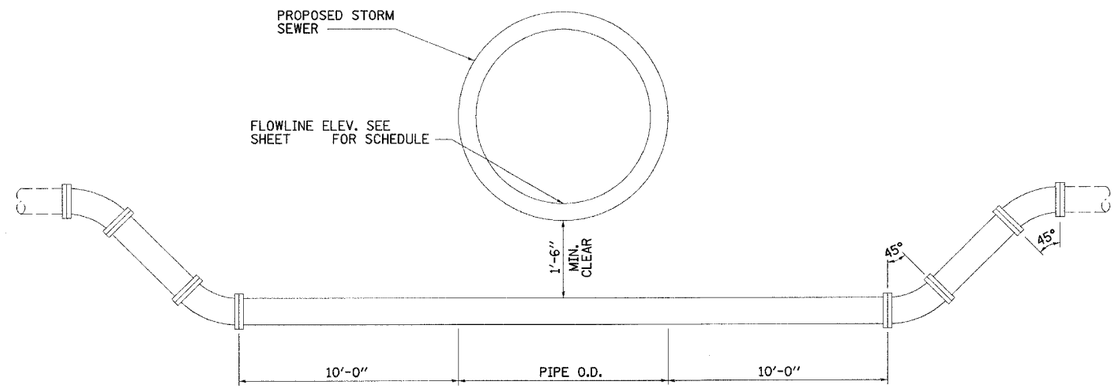

WATERMAIN CROSSING DETAIL

THIS WORK WILL BE PAID FOR PER FOOT AS ADJUSTING WATER MAIN OF THE DIAMETER SPECIFIED.

NOTE:
WATERMAIN SHALL BE DUCTILE IRON PIPE CLASS 52. CEMENT LINED WITH RESTRAINED JOINTS. SIZE TO MATCH EXISTING.

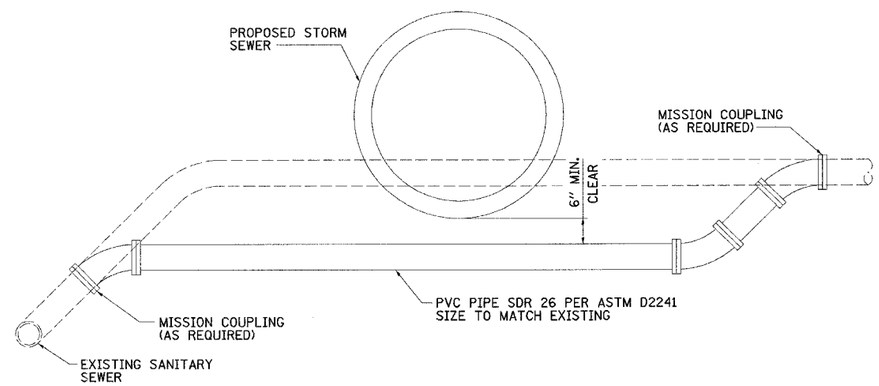

SANITARY SEWER SERVICE DETAIL

THIS WORK WILL BE PAID FOR PER FOOT AS ADJUSTING SANITARY SEWERS. 8" DIAMETER OR LESS

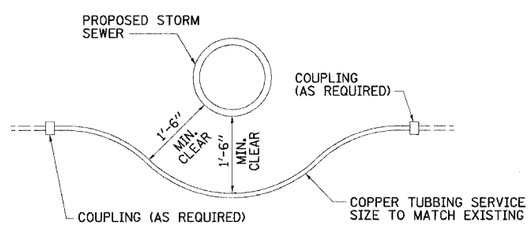

WATER SERVICE CROSSING DETAIL

THIS WORK WILL BE PAID FOR PER FOOT AS ADJUSTING WATER SERVICE LINE.

NOTE:
ALL WORK ON EXISTING WATER MIANS AND SERVICES SHALL BE COORDINATED WITH THE CITY OF LaSALLE WATER DEPARTMENT. THE CITY WATER DEPARTMENT SHALL BE NOTIFIED A MINIMUM OF 72 HOURS PRIOR TO THE START OF WORK. ONLY CITY WATER DEPARTMENT PERSONNEL SHALL OPERATE EXISTING WATER VALVES.

NOTE:
IF A LEAD SERVICE IS ENCOUNTERED, THE CONTRACTOR SHALL REPLACE THE SERVICE LINE, INCLUDING THE CORPORATION STOP, FROM THE MAIN TO THE RIGHT-OF-WAY LINE. THIS WORK WILL BE PAID FOR IN ACCORDANCE WITH ARTICLE 109.04.

REVISIONS	
NAME	DATE

ILLINOIS DEPARTMENT OF TRANSPORTATION

WATER MAIN DETAILS

FAU 6108 (IL. RTE. 351)
SECTION (70X)N & TS-1
LASALLE COUNTY

SCALE: VERT. HORIZ.
DATE: 06/30/03
DRAWN BY: MABUS
DESIGNED BY: BOTT
CHECKED BY: COLBROOK

GREENE & BRADFORD, INC.
OF SPRINGFIELD
CONSULTING ENGINEERS
SPRINGFIELD, ILLINOIS 62707
PROFESSIONAL DESIGN FIRM 184.001-0073
PROFESSIONAL: ELECTRICAL, STRUCTURAL, ENGINEERING, CONSTRUCTION
(217) 793-0900 FAX (217) 793-1427 P.O. BOX 1 - STORM@GBSPRINGFIELD.COM

COMPUTER FILE NO.
WM STAND_01
PROJECT: 01194.B_N
04/05/04-RPB

DESIGN		
INT.	DATE	REASON

PLOTS & CHECKS			
INT.	DATE	NO.	REASON

CHECKS		
INT.	DATE	REASON

FILE NAME = $FILE$
PLOT SCALE = $DHSCALE$ DRV = $PLOTTER$
PLOT DATE = $DATE$
PLOT TIME = $TIME$
OPERATOR = $USER$

IDOTPL-20 1"=20' 8/07/00

DRAINAGE & UTILITIES FAU RTE. 6108 (IL RTE. 351) LASALLE CO.