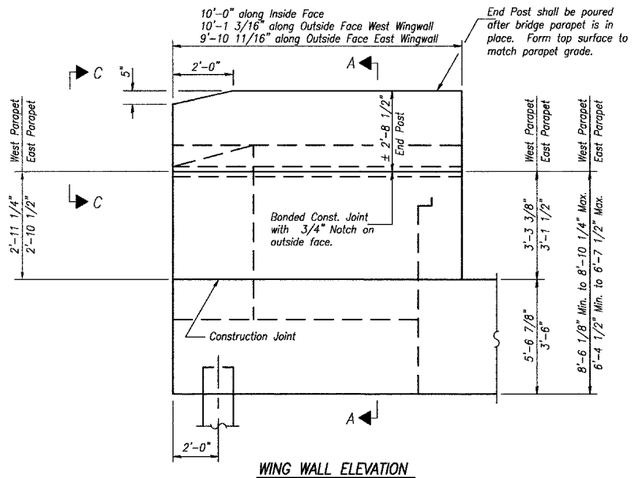


WING WALL ELEVATION
Showing Dimensions

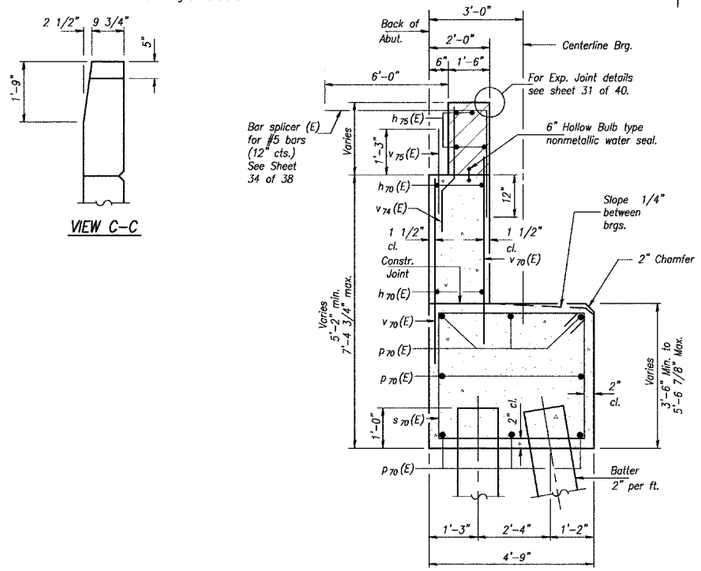


SEC. THRU ABUT.

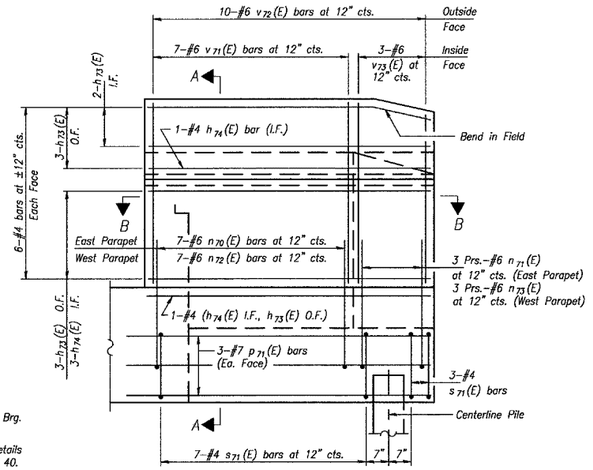


WING WALL ELEVATION
Showing Reinforcement

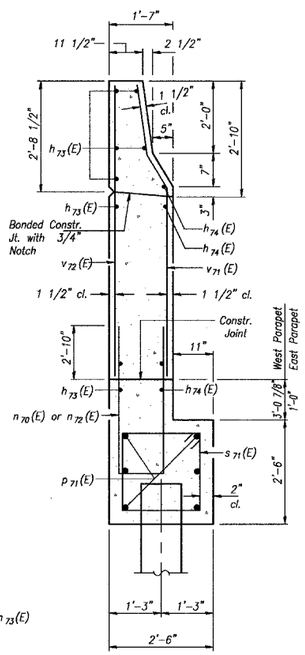


SEC. A-A




VIEW C-C

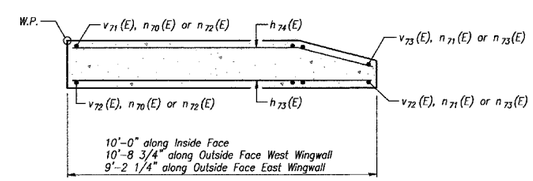


SEC. B-B

Notes: Hatched area to be poured after superstructure forms have been removed. Quantity of concrete included with Concrete Superstructure.
Space reinforcement in cap to miss anchor bolts.
Pour steps monolithically with cap.
Reinforcement bars designated (E) shall be epoxy coated.
Quantity of concrete in end post included with Concrete Superstructure on sheet 13 of 38.

NORTH ABUTMENT WINGWALL DETAILS
FAS 259 C.H. 3
OVER FOX RIVER
LA SALLE COUNTY
STA. 20+15.00
STRUCTURE NO. 050-3562

| | | | | | |
|---|---|---|---|---|---|
| DRAWN BY: LAG | CAD: WING | REVISIONS DATE | BY | SCALE: AS NOTED | SHEET 48 |
| CHECKED BY: JKC | DATE: 02/03 | 3/08/04 | NET | FILE NO.: 11174.01Y-1 | OF 79 |