FAP ROUTE	SECTION	COUNTY	TOTAL SHEETS	SHEET NO.
711	115(BY)BR	VERMILION	93	29
FED. ROAD DIST. NO.	ILLINOIS	FED. AID PROJECT-		

SHEET NO. 10

28 SHEETS

CONTRACT NO. 90843

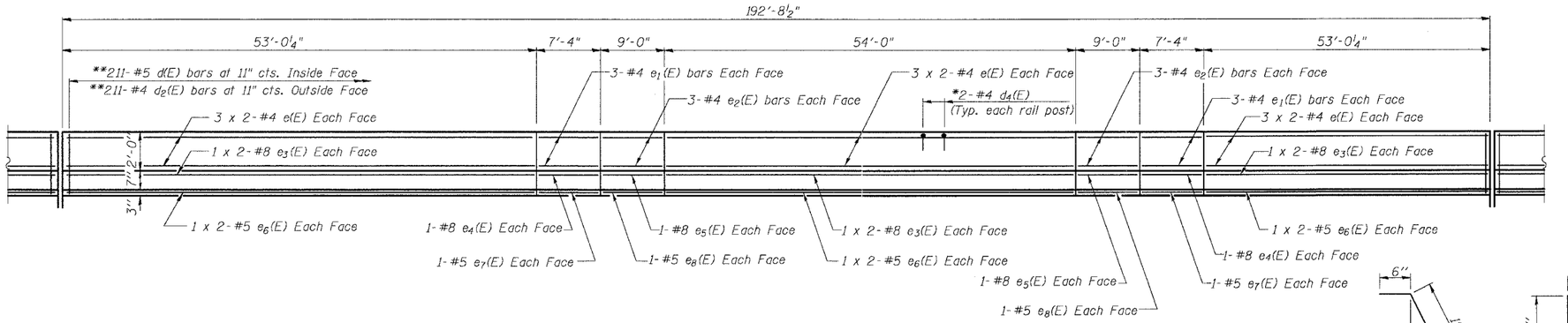

INSIDE ELEVATION OF PARAPET

*d4(E) bars needed at North Parapet only.
**Omit d(E) and d2(E) bars at North Parapet. Use Bar Splicer Assembly shown on Sheets 7, 8, 9 and 24 of 28.

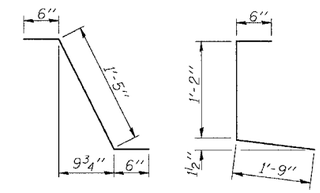

BAR $d_1(E)$ BAR $d_3(E)$

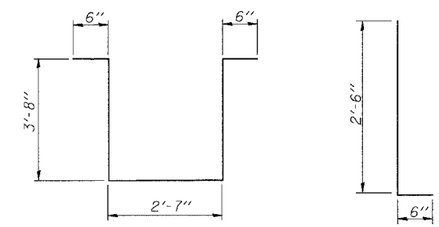

BAR s(E) BARS d(E) & $d_2(E)$

Min. Bar Laps in Parapet

#4 bars = 1'-8"
#5 bars = 2'-2"
#8 bars = 4'-6"

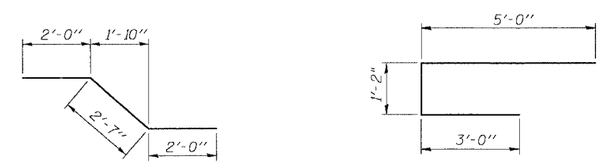

BAR $m_5(E)$ BAR x(E)

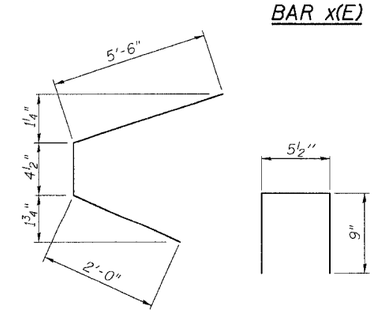

BAR $d_5(E)$ BAR $d_4(E)$

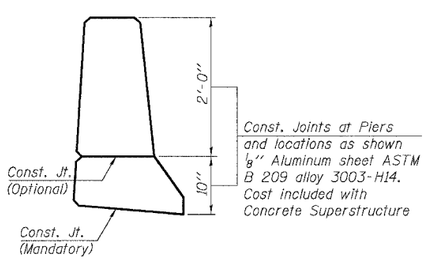

PARAPET JOINT DETAIL

SUPERSTRUCTURE BILL OF MATERIAL

Bar	No.	Size	Length	Shape
a(E)	516	#5	18'-6"	
$a_1(E)$	516	#5	24'-1"	
$a_2(E)$	133	#6	4'-6"	
$a_3(E)$	14	#7	35'-3"	
$a_4(E)$	40	#6	8'-2"	
$a_5(E)$	8	#6	3'-4"	
$a_6(E)$	8	#6	4'-7"	
$a_7(E)$	2	#6	22'-10"	
$a_8(E)$	2	#6	30'-6"	
$a_9(E)$	14	#7	27'-4"	
b(E)	336	#5	28'-11"	
$b_1(E)$	84	#6	26'-1"	
$b_2(E)$	216	#5	33'-6"	
d(E)	211	#5	3'-0"	
$d_1(E)$	211	#5	2'-5"	
$d_2(E)$	211	#4	3'-0"	
$d_3(E)$	211	#4	3'-5"	
$d_4(E)$	42	#4	2'-0"	
$d_5(E)$	135	#6	6'-1"	
e(E)	72	#4	27'-9"	
$e_1(E)$	24	#4	7'-1"	
$e_2(E)$	24	#4	8'-9"	
$e_3(E)$	24	#8	29'-2"	
$e_4(E)$	8	#8	7'-1"	
$e_5(E)$	8	#8	8'-9"	
$e_6(E)$	24	#5	28'-0"	
$e_7(E)$	8	#5	7'-1"	
$e_8(E)$	8	#5	8'-9"	
m(E)	40	#4	8'-1"	
$m_1(E)$	8	#4	3'-3"	
$m_2(E)$	8	#4	4'-6"	
$m_3(E)$	4	#6	6'-3"	
$m_4(E)$	20	#6	3'-6"	
$m_5(E)$	14	#8	6'-7"	
s(E)	60	#4	10'-11"	
x(E)	144	#6	9'-2"	
Reinforcement Bars, Epoxy Coated			Lbs.	58,410
Concrete Superstructure			Cu. Yds.	311.3
Bar Splicers			Each	982

Reinforcement bars designated (E) shall be epoxy coated.
Bars indicated thus 20 x 3-#5 etc. indicates 20 lines of bars with 3 lengths per line.

ILLINOIS DEPARTMENT OF TRANSPORTATION

SHEET TITLE: SUPERSTRUCTURE DETAILS

PROJECT: US RTE 136 OVER BLUEGRASS CREEK
FAP ROUTE 711 SECTION 115(BY)BR
VERMILION COUNTY
STATION 236+24.70
STRUCTURE NUMBER 092-0200

PROJECT NO. 01054
SCALE
DATE 05/18/04
DRAWN BY TFC
CHECKED BY KPS/CME/MCB

COOMBE-BLOXDORF P.C.
Engineers / Land Surveyors
Springfield, Illinois
Design Firm License No. 184-002703

DRAWING NO. 10 OF 28 SHTS

PI-1-D 9-1-03

05/21/2004
_10_pi-dtlgn