FAP ROUTE	SECTION	COUNTY	TOTAL SHEETS	SHEET NO.
711	115(BY)BR	VERMILION	93	32
FED. ROAD DIST. NO.	ILLINOIS	FED. AID PROJECT-		

SHEET NO. 13

28 SHEETS

CONTRACT NO. 90843

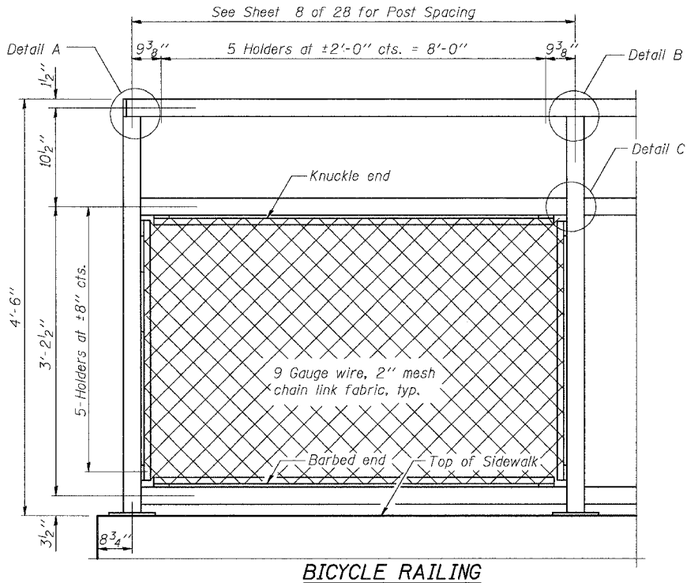

BICYCLE RAILING

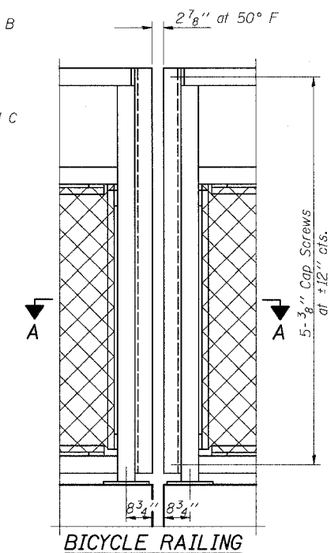

BICYCLE RAILING

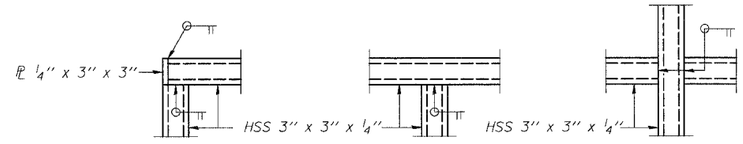

DETAIL A DETAIL B DETAIL C

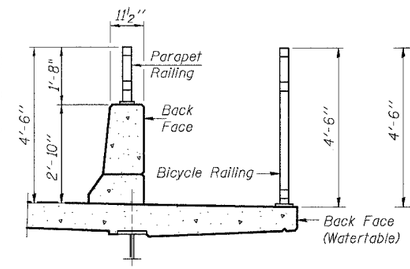

SECTION THRU DECK

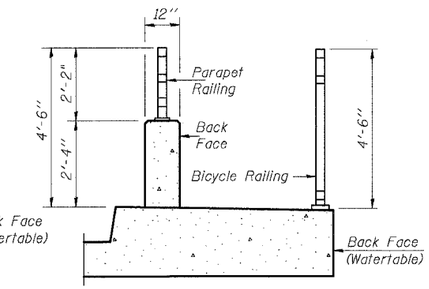

SECTION THRU SIDEWALK

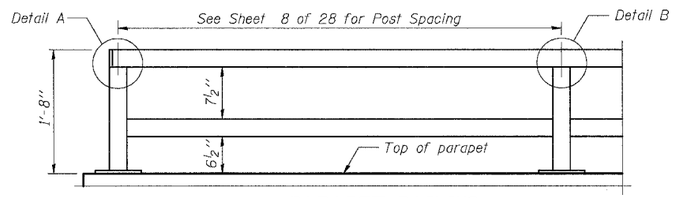

PARAPET RAILING ELEVATION

(Inside Face of Two Element Rail)

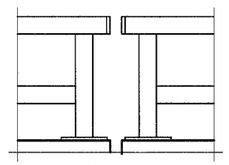

PARAPET RAILING ELEVATION AT EXPANSION JOINT

(Two Element Rail Shown - Three Element Rail Similar)

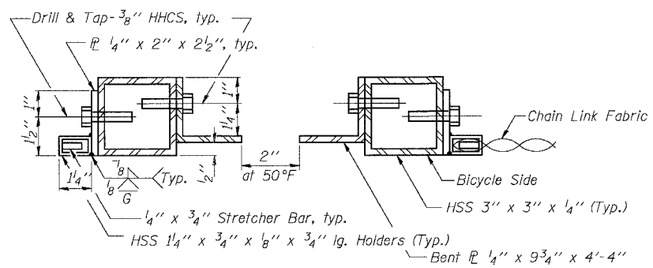

SECTION A-A

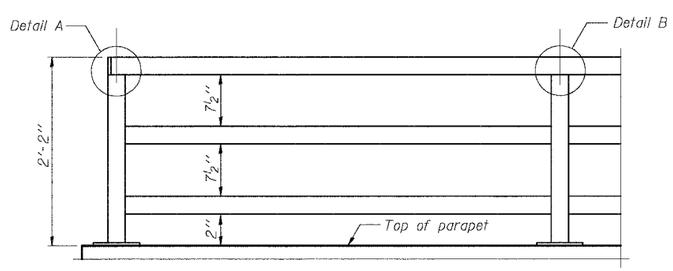

PARAPET RAILING ELEVATION

(Inside Face of Three Element Rail)

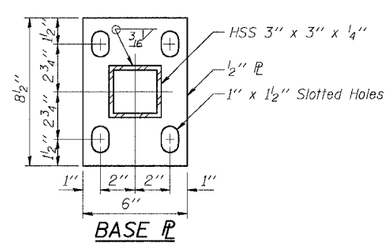

BASE PL

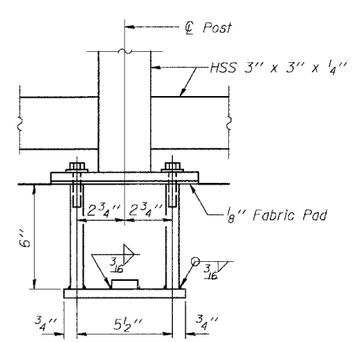

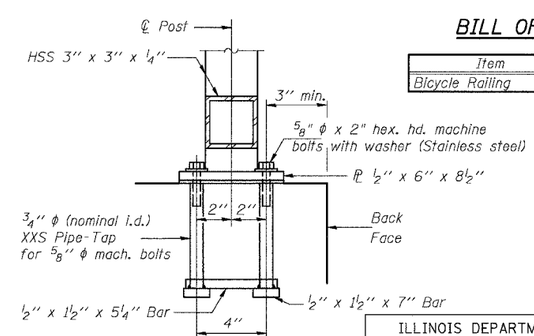

ANCHOR BOLT DETAILS

In lieu of the cast-in-place anchor device shown, the Contractor has the option of drilling and epoxy grouting $\frac{5}{8}''$ ϕ anchor rods. Embedment shall be according to the manufacturer's specifications.

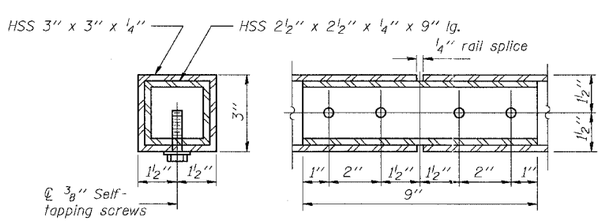

RAIL SPLICE

NOTES

Railing shall be according to Section 509 of the Standard Specifications, except as noted, and will be paid for at the Contract Unit Price per foot for Bicycle Railing.

The 9 gauge fabric ties shall be according to Article 1006.27 (d) of the Standard Specifications.

Installation of the chain link fabric shall be according to Section 664 of the Standard Specifications.

Hollow structural sections shall conform to the requirements of ASTM designation A 500, Grade B, structural steel tubing.

All other steel shapes and plates shall conform to the requirements of AASHTO M 270 Grade 36.

The Parapet Railing, furnished and installed shall not be paid for separately but shall be included in the unit bid price for Bicycle Railing.

The chain link fabric shall be placed along Bicycle Side as shown on Section A-A.

Stretcher bars shall be used at all four sides of each panel.

If the option of drilling and epoxy grouting the anchor rods is chosen, the Contractor shall use the capsule or the adhesive cartridge type anchor rods that have been previously tested and given a prior approval by the Department. The Contractor shall install these anchor rods in pre-drilled holes according to the manufacturer's recommendations and procedures. The capsule or the adhesive cartridge shall be sealed with pre-measured amounts of the adhesive chemical.

Space reinforcement to miss anchor rods.

All posts, railing, splices, anchor devices and bent plates shall be galvanized after shop fabrication according to AASHTO M 111 and ASTM A 385. All bolts, nuts, washers and anchor rods shall be galvanized according to AASHTO M 232 except stainless steel bolts as noted.

Vent holes for galvanizing shall be placed in the posts and rails at locations that will not allow the accumulation of moisture in the members.

The chain link fabric shall conform to the requirements of Article 1006.27(a)(1)a, b or c of the Standard Specifications.

BILL OF MATERIAL

Item	Unit	Quantity
Bicycle Railing	Foot	192

ILLINOIS DEPARTMENT OF TRANSPORTATION

SHEET TITLE: BICYCLE RAILING

PROJECT: US RTE 136 OVER BLUEGRASS CREEK
FAP ROUTE 711 SECTION 115(BY)BR
VERMILION COUNTY
STATION 236+24.70
STRUCTURE NUMBER 092-0200

PROJECT NO. 01054
SCALE
DATE 05/18/04
DRAWN BY TFG
CHECKED BY KPS/CME/MCB
DRAWING NO. 13 OF 28 SHTS

COOMBE-BLOXDORF P.C.
Engineers / Land Surveyors
Springfield, Illinois
Design Firm License No. 184-002703

R-29 9-01-03 (10'-0'' Maximum Post Spacing)

05/18/2004
_101-25.dgn