FAP ROUTE	SECTION	COUNTY	TOTAL SHEETS	SHEET NO.
711	115(BY)BR	VERMILION	93	37
FED. ROAD DIST. NO.	ILLINOIS	FED. AID PROJECT-		

SHEET NO. 18

28 SHEETS

CONTRACT NO. 90843

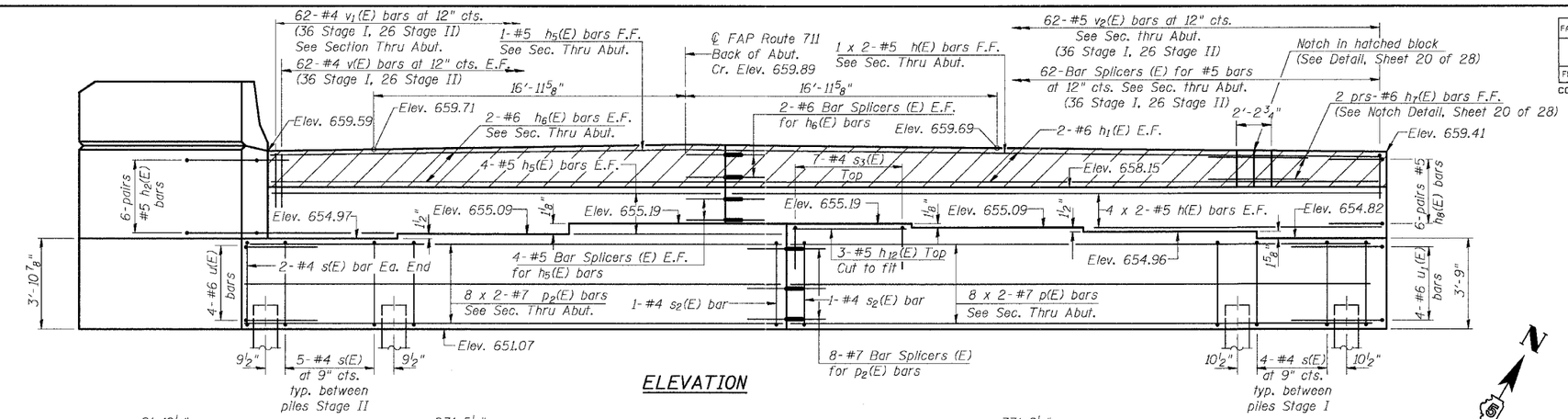

ELEVATION

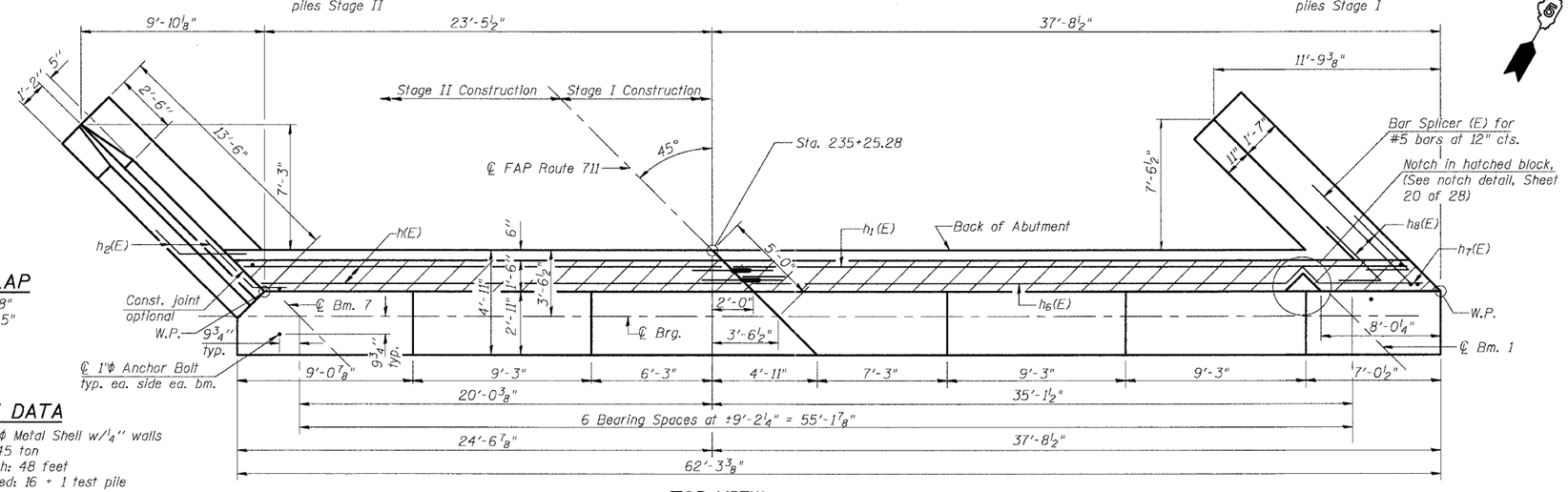

TOP VIEW

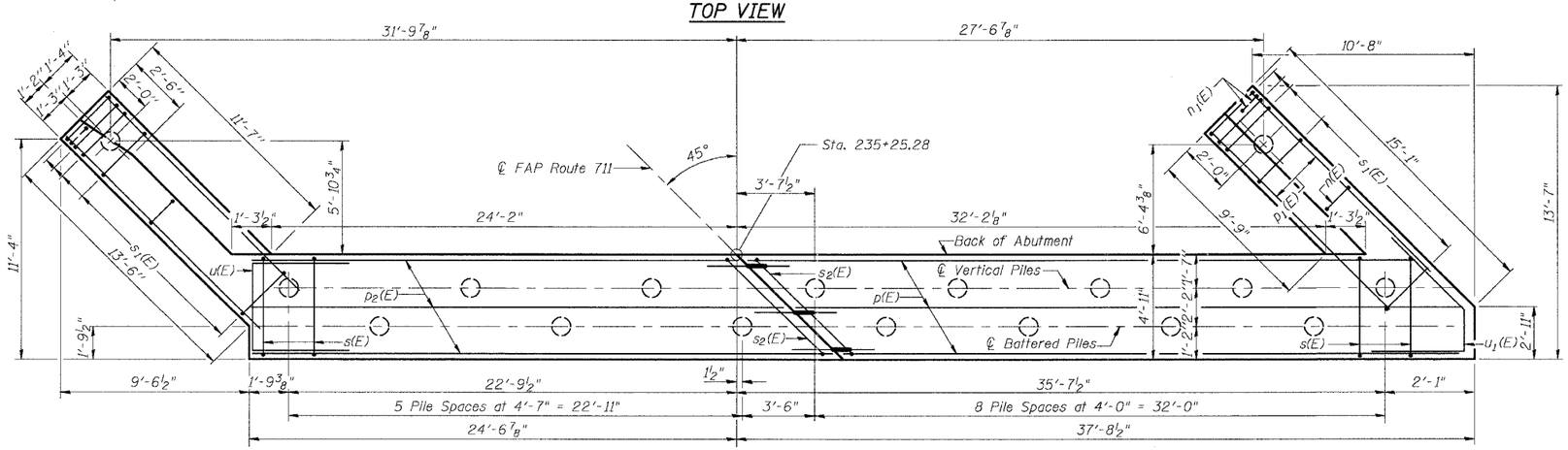

PLAN-PILE CAP

MIN. BAR LAP

#5 bars = 1'-8"
#7 bars = 3'-5"

PILE DATA

Type: 12" Φ Metal Shell w/1/4" walls
Capacity: 45 ton
Est. Length: 48 feet
No. Required: 16 + 1 test pile

ABUTMENT BILL OF MATERIAL

Bar	No.	Size	Length	Shape
h(E)	18	#5	18'-7"	
h_1(E)	4	#6	35'-4"	
h_2(E)	12	#5	6'-5"	
h_3(E)	17	#4	13'-2"	
h_4(E)	7	#4	13'-1"	
h_5(E)	10	#5	25'-2"	
h_6(E)	4	#6	25'-1"	
h_7(E)	4	#6	6'-11"	
h_8(E)	12	#5	6'-5"	
h_9(E)	6	#4	14'-8"	
h_{12}(E)	3	#5	9'-8"	
n(E)	27	#6	12'-0"	
n_1(E)	6	#6	6'-0"	
p(E)	16	#7	18'-0"	
p_1(E)	12	#7	14'-6"	
p_2(E)	16	#7	16'-4"	
s(E)	61	#4	16'-3"	
s_1(E)	30	#4	9'-5"	
s_2(E)	2	#4	20'-1"	
s_3(E)	7	#4	6'-7"	
u(E)	4	#6	13'-5"	
u_1(E)	4	#6	11'-5"	
v(E)	124	#4	6'-2"	
v_1(E)	62	#4	3'-6"	
v_2(E)	52	#5	2'-0"	
v_3(E)	3	#6	6'-11"	
v_4(E)	11	#6	6'-11"	
v_5(E)	14	#6	6'-11"	
v_6(E)	30	#6	3'-4"	
Structure Excavation		Cu. Yd.	341	
Concrete Structures		Cu. Yd.	72.1	
Reinforcement Bars, Epoxy Coated		Pound	5760	
Furnishing Metal Pile Shells 12"		Foot	768	
Driving & Filling Shells		Foot	768	
Test Piles Metal Shell		Each	1	
Bar Splicers		Each	82	

Reinforcement bars designated (E) shall be epoxy coated.

For details of Bar Splicers, see sheet 24 of 28.

Cut h(E) and h_1(E) bars to fit around notch.

Work this sheet with sheet 20 & 21 of 28.

ILLINOIS DEPARTMENT OF TRANSPORTATION

SHEET TITLE: WEST ABUTMENT

PROJECT: US RTE 136 OVER BLUEGRASS CREEK
FAP ROUTE 711 SECTION 115(BY)BR
VERMILION COUNTY
STATION 236+24.70
STRUCTURE NUMBER 092-0200

PROJECT NO. 01054
SCALE
DATE 05/18/04
DRAWN BY TFG
CHECKED BY KPS/CME/MCB

COOMBE-BLOXDORF P.C.
Engineers / Land Surveyors
Springfield, Illinois
Design Firm License No. 184-002703

DRAWING NO. 18 OF 28 SHTS

A-1-L (35°-60°) 9-01-03

05/10/2004
_V9 west-abutment.dgn