93385

T.R.	SECTION	COUNTY	TOTAL SHEETS	SHEET NO.
235	93-02109-00-BR	CHRISTIAN	18	14
FED. ROAD DIST. NO. 7	ILLINOIS	FED. AID PROJECT-		

SHEET 6 OF 10

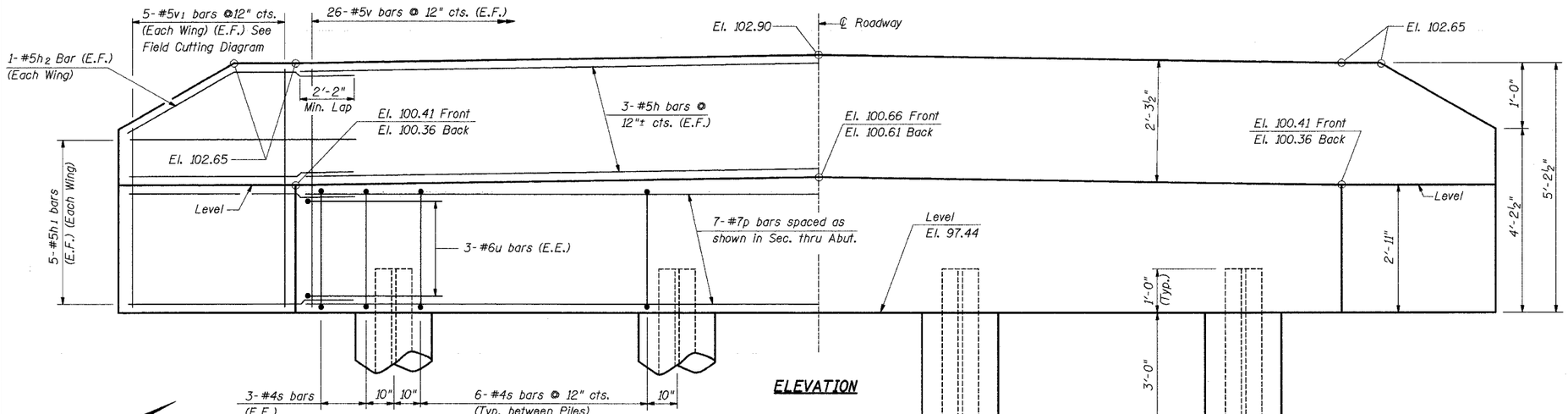

ELEVATION

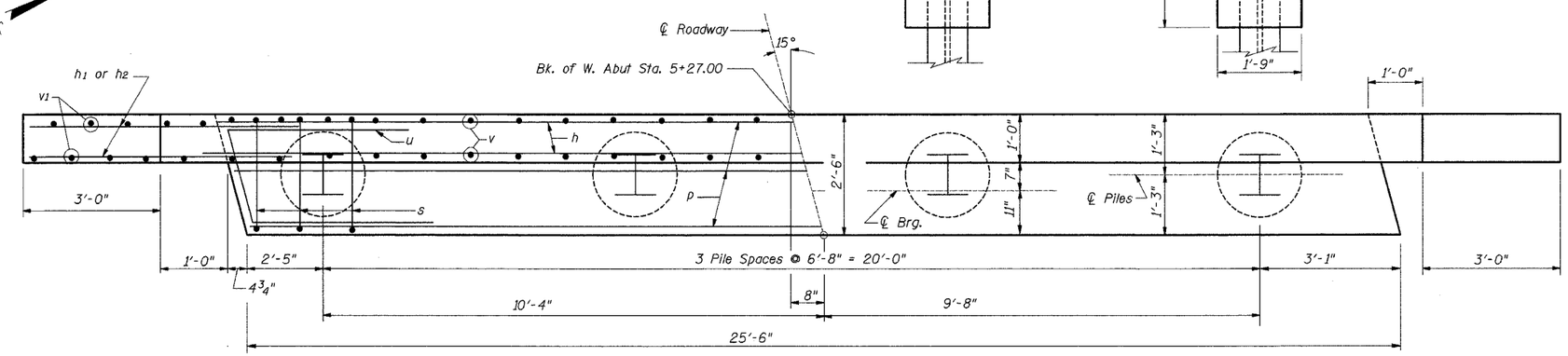

PLAN
(LOOKING EAST)

BILL OF MATERIAL

Bar	No.	Size	Length	Shape
h	6	#5	25'-0"	
h1	20	#5	6'-6"	
h2	4	#5	6'-6"	
p	7	#7	25'-0"	
s	24	#4	10'-1"	
u	6	#6	7'-1"	
v	52	#5	4'-8"	
v1	10	#5	8'-6"	

ITEM	UNIT	QUANTITY
Reinforcement Bars	Pound	1250
Concrete Structures	Cu. Yd.	10.8
Furnishing Steel Piles, HP 10 x 42	Foot	84
Driving Steel Piles	Foot	84
Test Piles	Each	1
Structure Excavation	Cu. Yd.	18
Concrete Encasement	Cu. Yd.	1.1
Name Plate	Each	1

PILE DATA

Type = Steel HP 10 x 42
Capacity Required = Drive to Refusal
Estimated Length = 28'
Number Req'd. = 4 (Including 1 Test Pile)

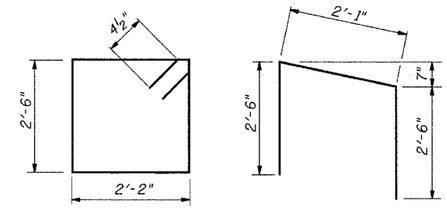

BAR s

BAR u

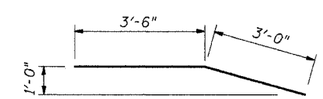

BAR h2

NOTE:
The hatched area of the wingwalls & backwall shall be poured after the beams are in place.

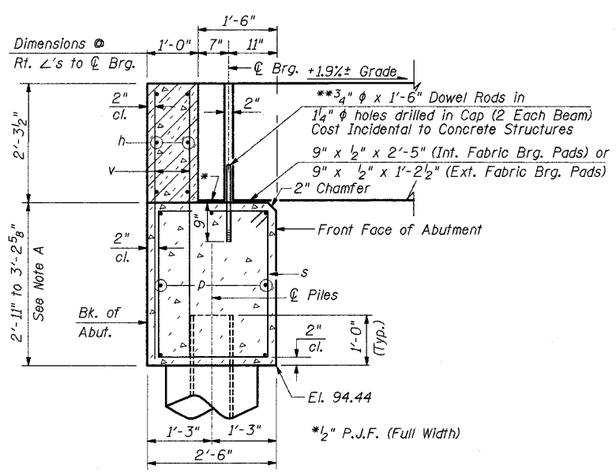

SECTION THRU ABUTMENT

** Dowel Rods to be grouted after beams are in place and prior to grouting the shear keys.

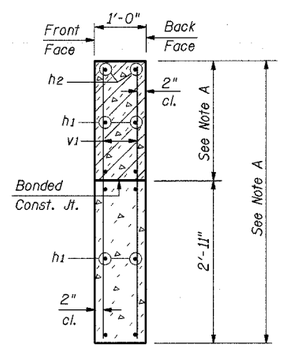

SECTION THRU WINGWALLS

NOTE A: See Elev. given on Elev. View

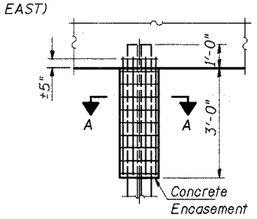

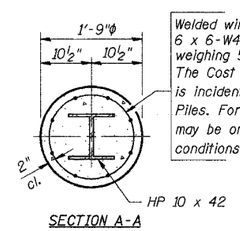

Welded wire fabric 6 x 6-W4.0 x W4.0 weighing 58#/100 Sq Ft. The Cost of Excavation & Reinf. is incidental to Furnishing Steel Piles. Forms for Encasement may be omitted when soil conditions permit.

SECTION A-A

PILE ENCASEMENT DETAIL

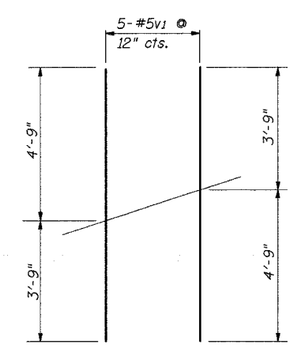

FIELD CUTTING DIAGRAM

Order v1 bars full length, cut to fit in field and place remainder in opposite face of wall.

WEST ABUTMENT DETAILS
T.R. 235 OVER BEAR CREEK
SECTION 93-02109-00-BR
CHRISTIAN COUNTY
STR. NO. 011-3400
STA. 6+24.42

ie consultants
INTERNATIONAL ENGINEERING CONSULTANTS, INC.
6420 SOUTH SIXTH STREET
SPRINGFIELD, ILLINOIS 62707
TEL. (217) 529-8027
FAX (217) 529-4543
IESPRINGFIELD@IE-CONSULTANTS.COM
WWW.IE-CONSULTANTS.COM

DESIGNED BY:	CHECKED BY:	DRAWN BY:	DATE:
G.B.M.	D.R.B.	THW	5-03-04

08/12/04

g:\s03038\CAD\STRUCT\3038 W ABUT.dgn