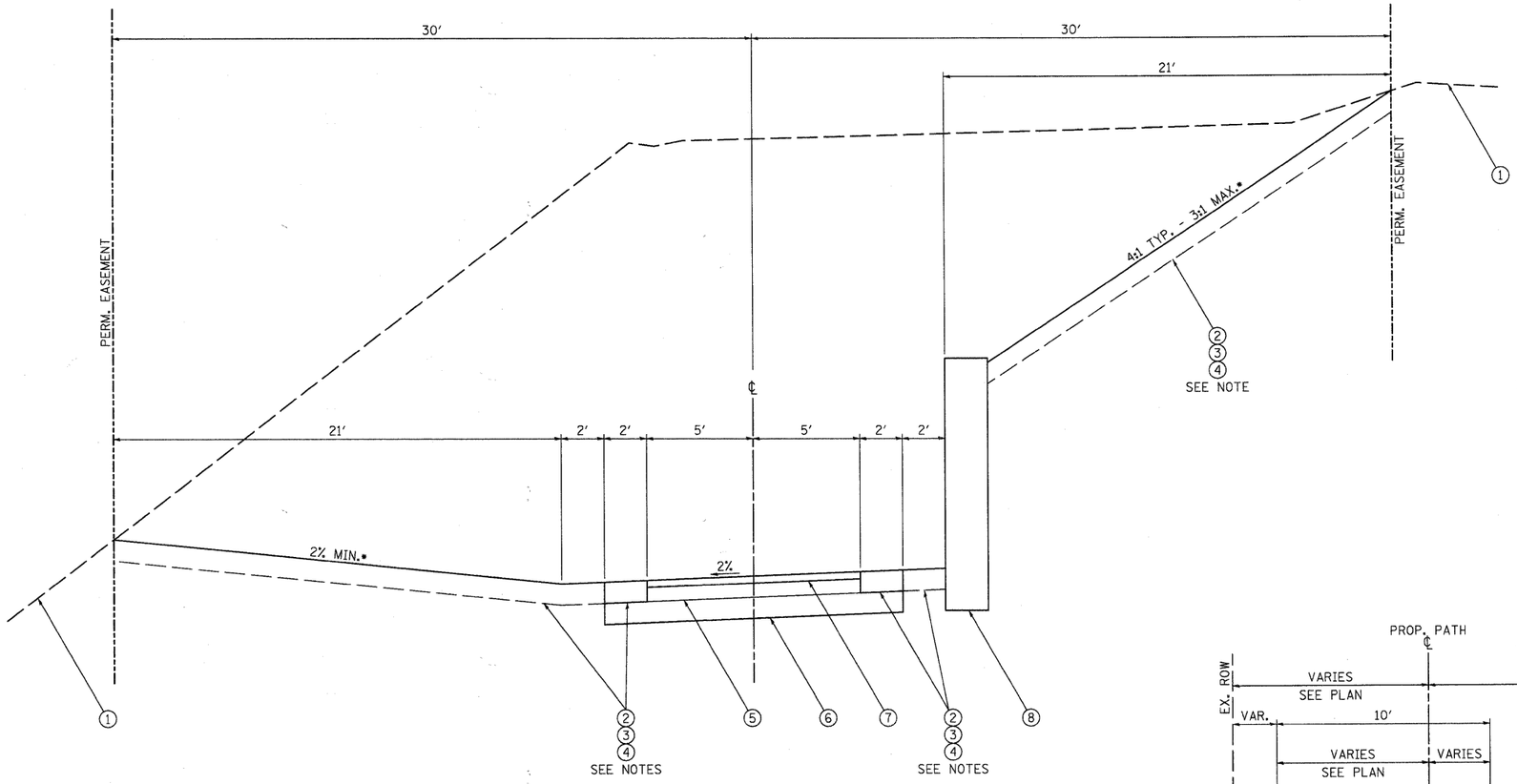

STATION RANGES
STA. 23+71.96 TO STA. 25+10.00

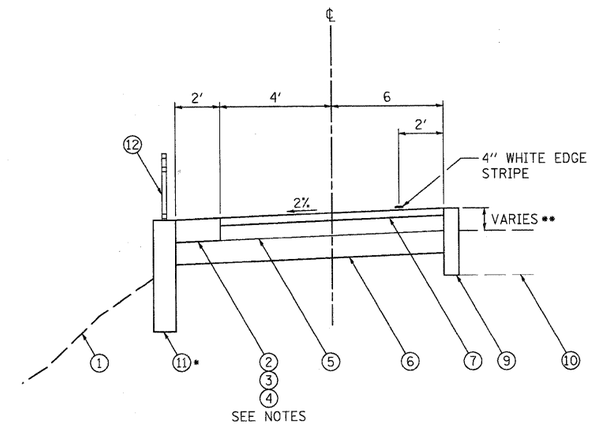

* REINFORCED CONCRETE. RETAINING WALL STA. 43+59.6 TO STA. 43+94.6±
** SEE DETAIL ON SHEETS 32-36

STATION RANGES
STA. 43+20.75 TO STA. 43+91.30±

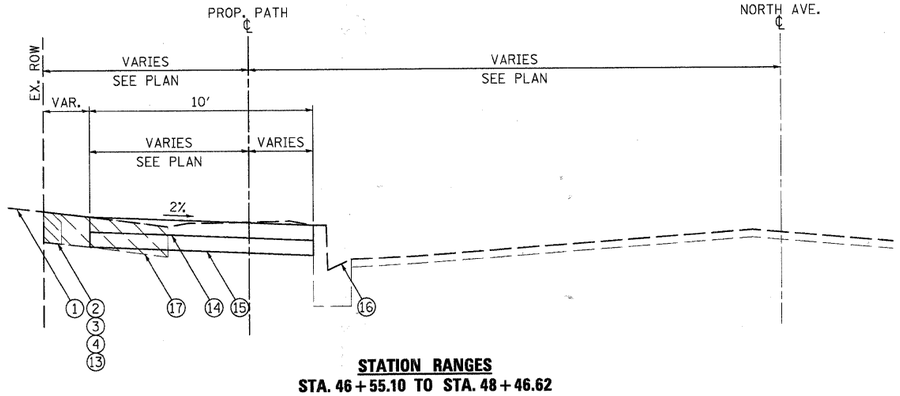

STATION RANGES
STA. 46+55.10 TO STA. 48+46.62

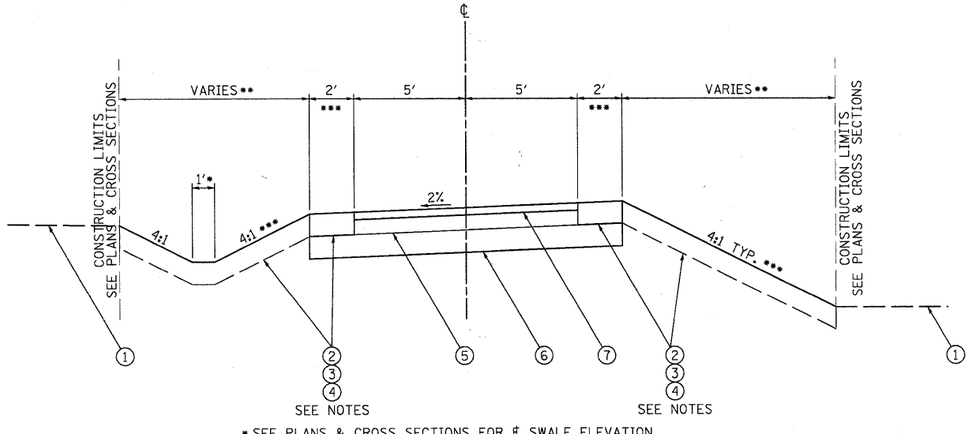

* SEE PLANS & CROSS SECTIONS FOR ℄ SWALE ELEVATION
** SEE PLANS & CROSS SECTIONS
*** STA. 41+35 TO STA. 41+60 PROVIDE 3' SHOULDERS AND 3:1 SIDESLOPES

STATION RANGES
STA. 41+00 TO STA. 41+60

LEGEND

1. EXISTING GROUND
2. TOPSOIL PLACEMENT, 6"
3. SEEDING, CLASS 1 B & FERTILIZING ON 2' SHOULDERS
4. EROSION CONTROL BLANKET
5. AGGREGATE BASE COURSE, TY B, 4"
6. SUB-BASE GRANULAR MATERIAL, TY B, 6"
7. HOT-MIX ASPHALT SURFACE COURSE, MIX "C", N50, 2"
8. MSE WALL
9. CONCRETE CURB, TYPE B (SPECIAL)
10. EXISTING PARK ENTRANCE
11. REINFORCED CONCRETE RETAINING WALL
12. BICYCLE RAILING
13. PAVEMENT REMOVAL
14. P.C.C. SIDEWALK, 5"
15. SUB-BASE GRANULAR MATERIAL, TY B, 4"
16. EXISTING CURB & GUTTER
17. SIDEWALK REMOVAL

NOTES:

1. TYPICAL ON DISTURBED AREAS WITHIN CONSTRUCITON LIMITS
2. ON DISTURBED AREAS BEYOND THE 2' SHOULDERS, PROVIDE SEEDING OF THE CLASS SHOWN ON THE EROSION CONTROL & SEDIMENT PLANS, SHEET NOS. 17 AND 18

FILE NAME = P:\CBBEL WEST Projects\2009\123140 FoxRvrTr-PhII\Civil\Dgn\sht\TYP02.dgn

WILLS BURKE KELSEY ASSOCIATES LTD. 116 West Main Street, Suite 201 St. Charles, Illinois 60174 (630) 443-7755	USER NAME = $USER$	DESIGNED - DB	REVISED - 10/5/10	STATE OF ILLINOIS DEPARTMENT OF TRANSPORTATION	TYPICAL SECTIONS
		DRAWN - NP	REVISED -		
	PLOT SCALE = N/A	CHECKED - DB	REVISED -		
	PLOT DATE = 12/20/2010	DATE - 12/20/10	REVISED -		SCALE: N/A · SHEET NO. 7 OF 58 SHEETS · STA. TO STA.

F.A. RTE.	SECTION	COUNTY	TOTAL SHEETS	SHEET NO.
	05-F3000-06-BT	KANE	58	7
		CONTRACT NO.63517		
FED. ROAD DIST. NO.	ILLINOIS	FED. AID PROJECT		