MEDIAN CROSS-OVER DETAIL

STA. 1083+00 TO STA. 1110+00

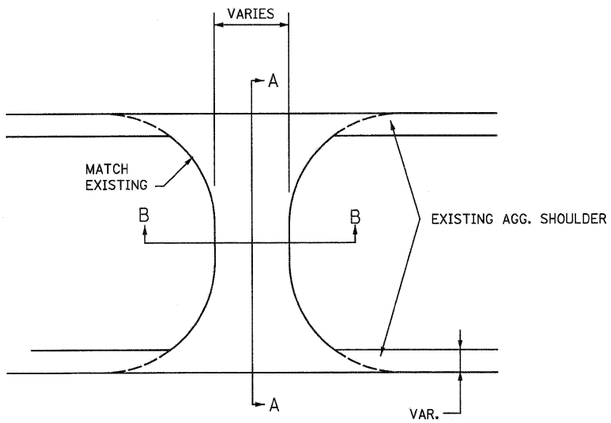

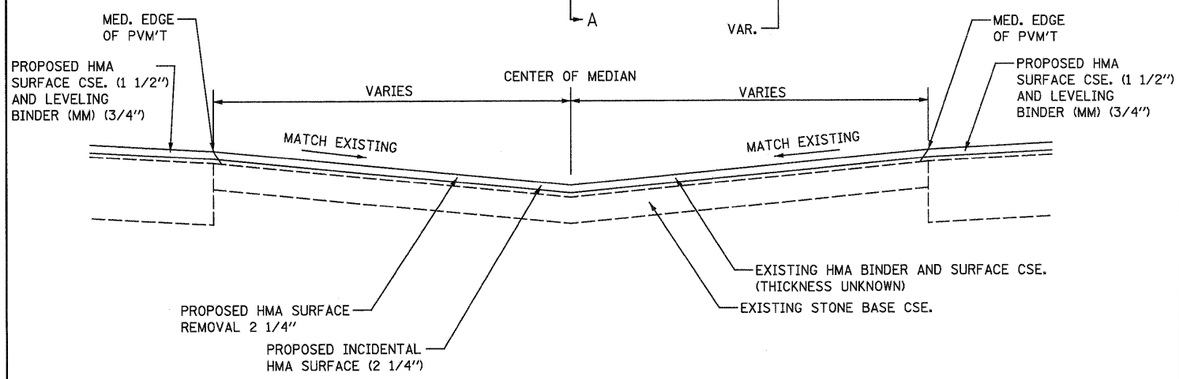

SECTION A-A

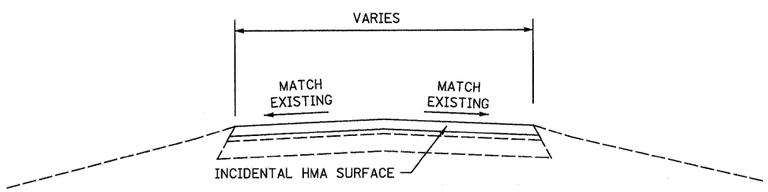

SECTION B-B

LOCATIONS:
STA. 1083+75
STA. 1085+50
STA. 1087+65
STA. 1090+90
STA. 1098+90
STA. 1109+40

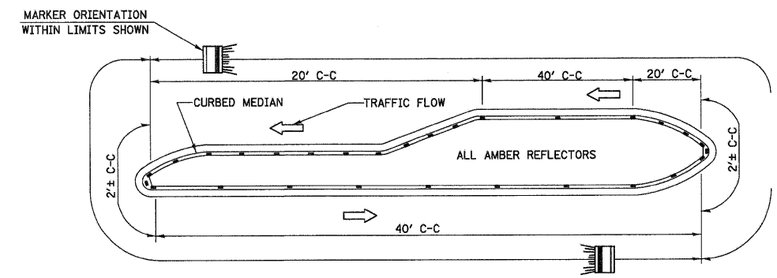

NOTE:
1. PRISMATIC REFLECTORS SHALL BE MONO-DIRECTIONAL AND POSITIONED SO THAT THE REFLECTIVE FACE IS FACING THE APPROACHING TRAFFIC.
2. PRISMATIC REFLECTORS SHALL BE SECURED IN PLACE WITH AN EPOXY ADHESIVE.
3. PRISMATIC REFLECTORS SHALL BE EITHER AMBER OR CRYSTAL IN COLOR.

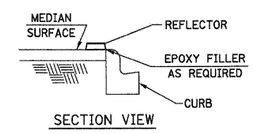

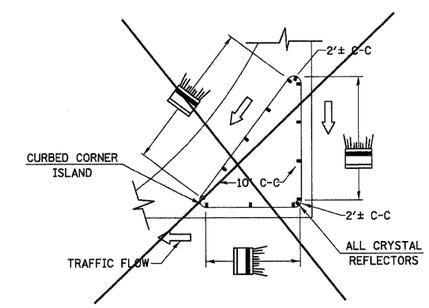

TYPICAL PLACEMENT OF PRISMATIC REFLECTORS ON CURBS

(NO SCALE)

FILE NAME = ...\cadd\D876D96-sht-details.dgn	USER NAME = SJS	DESIGNED -	REVISED -	STATE OF ILLINOIS DEPARTMENT OF TRANSPORTATION	MISCELLANEOUS DETAILS	F.A.U. RTE.	SECTION	COUNTY	TOTAL SHEETS / SHEET NO.
Johnson, Depp & Quisenberry CONSULTING ENGINEERS Springfield, Illinois		DRAWN -	REVISED -			9166	34-1RS-3	ST. CLAIR	87 / 87
	PLOT SCALE = 50.0000 ' / IN.	CHECKED -	REVISED -					CONTRACT NO. 76D96	
	PLOT DATE = 12/15/2010 09:40:57	DATE -	REVISED -		SCALE: SHEET NO. OF SHEETS STA. TO STA.		ILLINOIS	FED. AID PROJECT	