RTE.	SECTION	COUNTY	TOTAL SHEETS	SHEET NO.
N 5TH ST	03-00289-00-BR	ADAMS	90	62

MULTI-USE PATH RETAINING WALL DETAILS

CONTRACT NO. 93542

A1	48+40.25, 67.63' LT.
A2	48+40.83, 14.14' LT.
A3	48+37.04, C/L
A4	48+31.77, 19.67' RT.
A5	48+08.60, 61.68' RT.
R1	47+44.24, 40.02' LT.
R2	47+35.18, 6.22' LT.

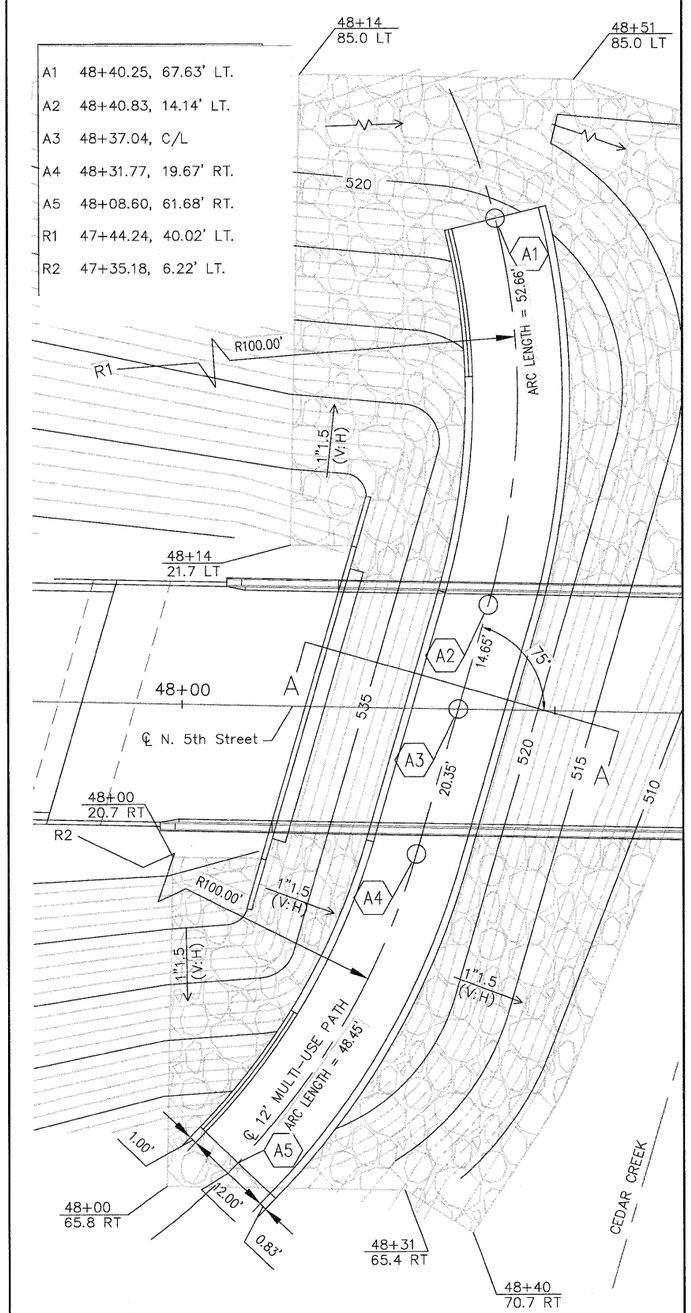

PLAN VIEW

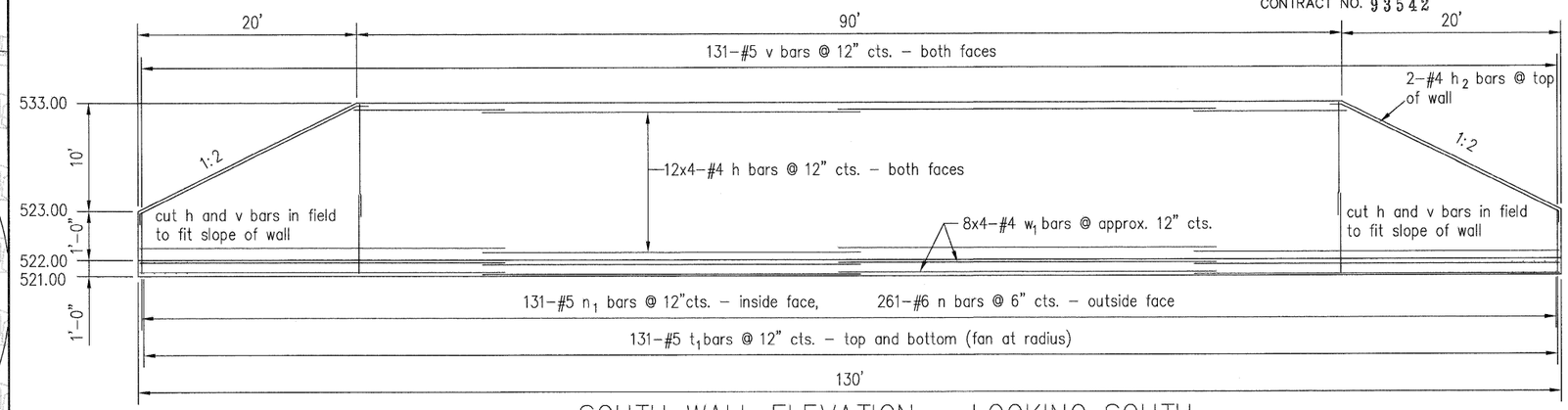

SOUTH WALL ELEVATION - LOOKING SOUTH

NOT TO SCALE

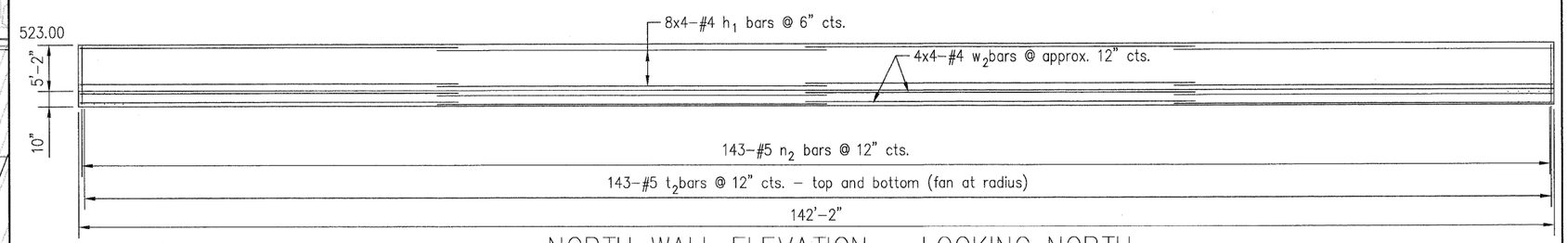

NORTH WALL ELEVATION - LOOKING NORTH

NOT TO SCALE

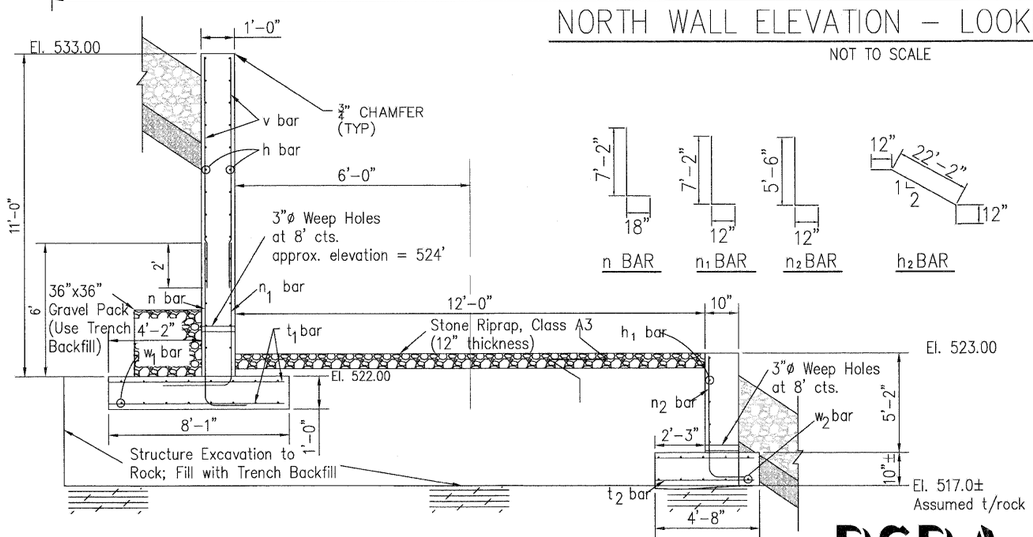

SECTION A-A

NOT TO SCALE

BILL OF MATERIAL

Bar	No.	Size	Length	Shape
h	96	#4	34'-0"	
h_1	32	#4	37'-0"	
h_2	4	#4	24'-2"	
n	261	#6	8'-8"	
n_1	131	#5	8'-2"	
n_2	143	#5	6'-6"	
w_1	64	#5	34'-0"	
w_2	32	#5	37'-0"	
t_1	262	#5	7'-6"	
t_2	286	#5	4'-2"	
v	262	#5	5'-10"	
Concrete Structures			Cu. Yd.	135.0
Reinforcement Bars			Pound	16,910
Stone Riprap Class A3			Sq. Yd.	182
Rock Excavation			Cu. Yd.	12.0
Trench Backfill			Cu. Yd.	670
Structure Excavation			Cu. Yd.	970

PSBA

POEPPING, STONE, BACH & ASSOCIATES, INC.

ARCHITECTS ENGINEERS PLANNERS SURVEYORS

100 S 54TH ST, P.O. BOX 709 • QUINCY, IL 62306

WITH OFFICES IN IKEOKUK, IOWA & HANNIBAL, MISSOURI

www.psba.com • PHONE 877-223-4605

REVISIONS	
NAME	DATE

CITY OF QUINCY, ILLINOIS

N. 5TH STREET BRIDGE

MISC. DETAIL

MULTI-USE PATH

RETAINING WALLS

SCALE: VERT. HORIZ.

DATE

DRAWN BY: DBS

CHECKED BY: AMW