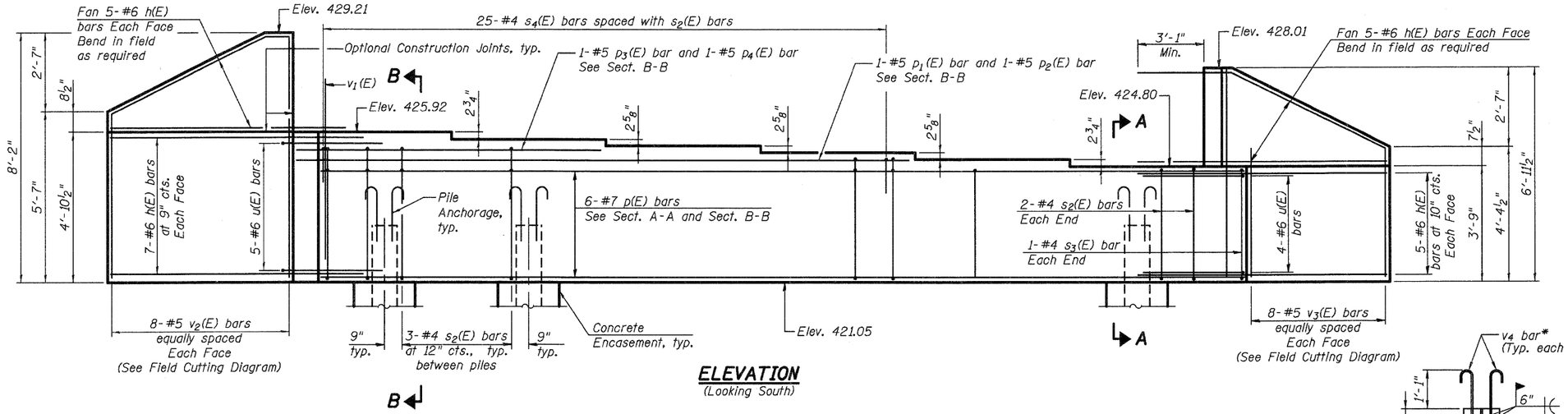

ELEVATION
(Looking South)

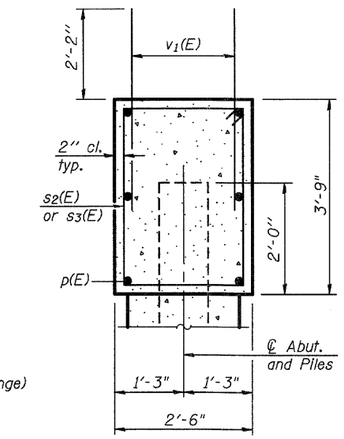

SECTION A-A

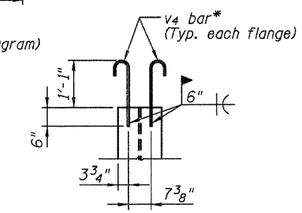

PILE ANCHORAGE

PILE DATA

Type: Steel HP 14x117 w/Pile Shoes
Nominal Required Bearing: 929 Kips
Factored Resistance Available: 374 Kips
Est. Length: 42 feet
No. Production Piles: 11
No. Test Piles: 1

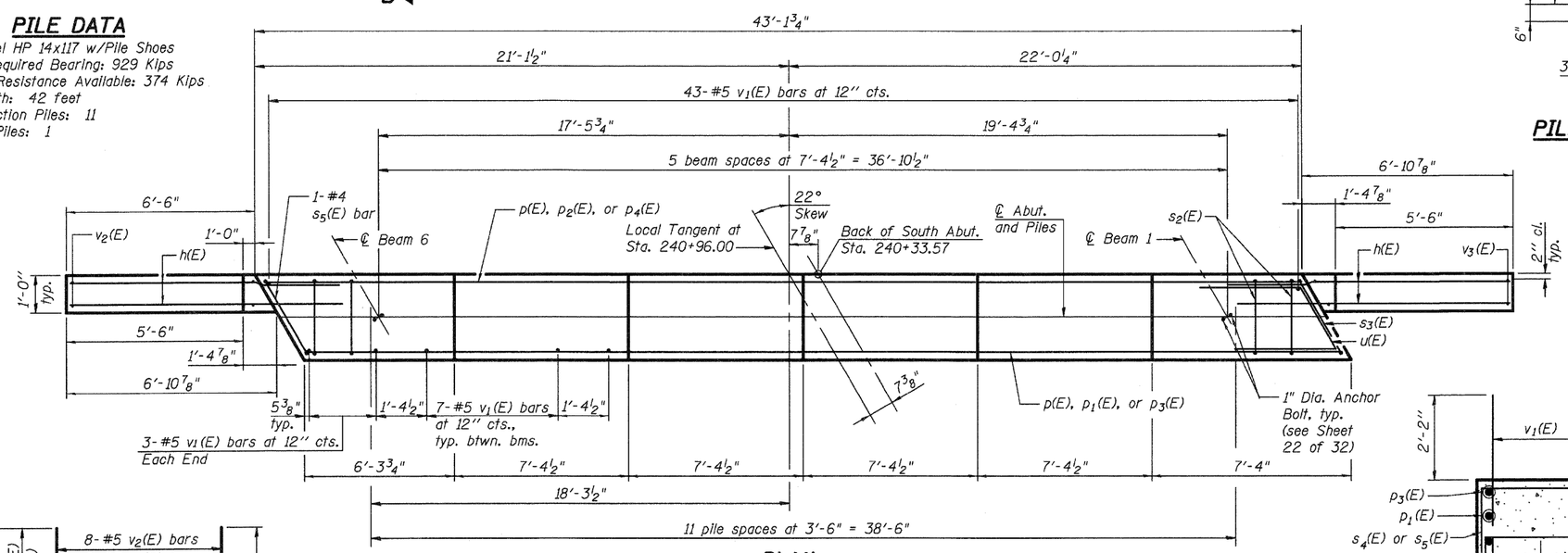

PLAN

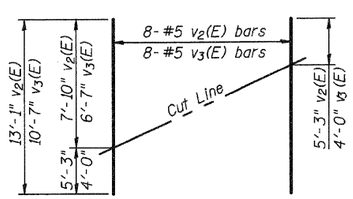

FIELD CUTTING DIAGRAM

Order $v_2(E)$ and $v_3(E)$ full length. Cut as shown and use remainder of bars in opposite face.

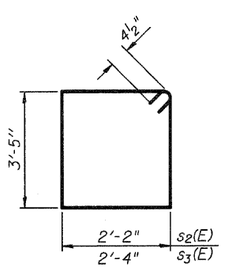

BARS s2(E) & s3(E)

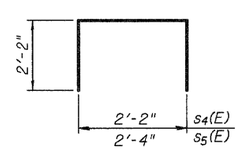

BARS s4(E) & s5(E)

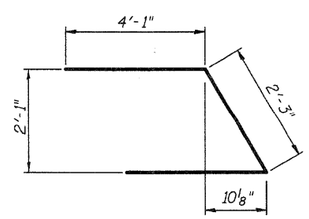

BAR u(E)

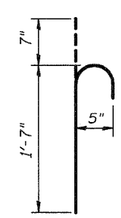

BAR v4*

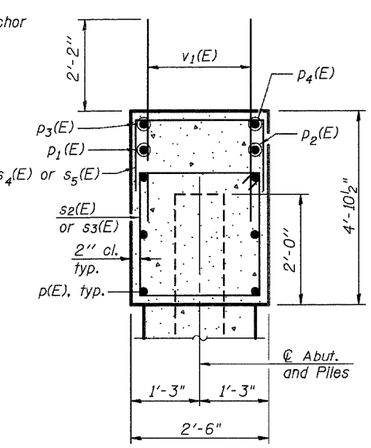

SECTION B-B

BILL OF MATERIAL

Bar	No.	Size	Length	Shape
h(E)	44	#6	10'-6"	
p(E)	6	#7	42'-10"	
$p_1(E)$	1	#5	28'-1"	
$p_2(E)$	1	#5	29'-1"	
$p_3(E)$	1	#5	13'-4"	
$p_4(E)$	1	#5	14'-4"	
$s_2(E)$	37	#4	11'-11	
$s_3(E)$	2	#4	12'-3"	
$s_4(E)$	25	#4	6'-6"	
$s_5(E)$	1	#4	6'-8"	
u(E)	9	#6	10'-5"	
$v_1(E)$	84	#5	4'-4"	
$v_2(E)$	8	#5	13'-1"	
$v_3(E)$	8	#5	10'-7"	
* v_4	48	#5	2'-2"	
Structure Excavation		Cu. Yd.	189	
Concrete Structures		Cu. Yd.	20.5	
Concrete Encasement		Cu. Yd.	6.6	
Protective Coat		Sq. Yd.	12	
Reinforcement Bars, Epoxy Coated		Pound	2,450	
Furnishing Steel Piles HP 14x117		Foot	462	
Driving Piles		Foot	462	
Test Pile Steel HP 14x117		Each	1	
Pile Shoes		Each	12	

* Cost of v_4 bars included with Furnishing Steel Piles HP14x117.

Notes:
Pour steps monolithically with cap.
Space reinforcement in cap to miss anchor bolts.
For details of piles and Concrete Encasement, see sheet 28 of 32.

MODJESKI and MASTERS
Experience great bridges.

FILE NAME =	USER NAME =	DESIGNED - MJP	REVISED -
		CHECKED - RLM	REVISED -
	PLOT SCALE =	DRAWN - AEC	REVISED -
	PLOT DATE = 12/02/2010	CHECKED - RLM	REVISED -

STATE OF ILLINOIS
DEPARTMENT OF TRANSPORTATION

SOUTH ABUTMENT DETAILS
STRUCTURE NO. 039-0073

SHEET NO. 23 OF 32 SHEETS

F.A.S. RTE.	SECTION	COUNTY	TOTAL SHEETS	SHEET NO.
1908	(13B)I-2	JACKSON	71	62

CONTRACT NO. 98898
ILLINOIS FED. AID PROJECT